

Catalogo
Catalogue 2026

Centurion mini

Rel 007

Centurion mini



www.kartcrg.com

DICHIARAZIONE DI CONFORMITA'

CE

Il fabbricante C.R.G. S.r.l.
Via Mantova, 4F/G 25017 Lonato del Garda (BS) Italia

dichiara che la macchina

Denominazione: **Kart da noleggio Tipo B**
Funzione: **Kart progettato e costruito per noleggio**
Modello: **CENTURION**
Matricola n.:

è stata sviluppata e prodotta in conformità alle seguenti disposizioni:

Direttiva Macchine 2006/42/CE

Principali norme applicate:

UNI EN 16230-1 : 2015 Kart da noleggio – Requisiti di sicurezza e metodi di prova per kart

UNI EN ISO 12100 : 2010 Sicurezza del macchinario – Principi generali di progettazione - Valutazione del rischio e riduzione del rischio.

UNI EN ISO 3744 : 2010 Acustica – Determinazione dei livelli di potenza sonora delle sorgenti di rumore mediante misurazione della potenza sonora

EN ISO 4871 Acustica - Dichiarazione e verifica dei valori di emissione sonora in macchinari e attrezzature

UNI EN ISO 11202 : 2010 Acustica – Rumore emesso dalle macchine e dalle apparecchiature. Determinazione dei livelli di pressione sonora di emissione al posto di lavoro e in altre specifiche posizioni applicando correzioni ambientali approssimate.

UNI EN ISO 5349-1: 2004 Vibrazioni meccaniche – Misurazione e valutazione dell'esposizione dell'uomo alle vibrazioni trasmesse alla mano

Persona autorizzata a costituire il Fascicolo Tecnico: Luca Bravo
c/o CRG Srl Via Mantova, 4F/G - 25017 Lonato del Garda (BS) Italia

Marina Vanaria
Legale rappresentante

C.R.G. S.r.l. Via MANTOVA 4F/G 25017 LONATO Del GARDA (BS) ITALY- Tel. +39 030-9912604 - Fax +39 030-9130714 P.IVA/C.F 00596340210 Cap.Soc. € 510.000,00 i.v.a



www.kartcrg.com

DECLARATION OF CONFORMITY

CE

The manufacturer C.R.G. S.r.l.
Via Mantova, 4F/G 25017 Lonato del Garda (BS) Italia

declares that the vehicle

Denomination: **Rental kart Type B**
Function: **Kart designed and constructed for rental use**
Model: **CENTURION**
Year of production:
Serial code n.:

was developed and produced in compliance with the following regulations:

Car directive 2006/42/CE

Principle norms applicable:

UNI EN 16230-1 : 2015 Rental kart - Principalities for safety and test methods applicable for kart

UNI EN ISO 12100 : 2010 Safety of machinery – General principles for design. Risk assessment and risk reduction

UNI EN ISO 3744 : 2010 Acoustics - Determination of sound power levels of noise source by measuring sound output

EN ISO 4871 Acoustic – Declaration and verification of noise emission values on machinery and equipment

UNI EN ISO 11202 : 2010 Acoustics - Noise emitted by machinery and equipment. Determination of emission sound pressure levels at a work station and at other specified positions applying approximate environmental corrections

UNI EN ISO 5349-1: 2004 Mechanical vibration - Measurement and evaluation of human exposure to hand transmitted vibration

Person authorized to compile the Technical File:

Luca Bravo
c/o CRG Srl Via Mantova, 4F/G - 25017 Lonato del Garda (BS) Italia

Marina Vanaria
Legal representative

C.R.G. S.r.l. Via MANTOVA 4F/G 25017 LONATO Del GARDA (BS) ITALY- Tel. +39 030-9912604 - Fax +39 030-9130714 P.IVA/C.F 00596340210 Cap.Soc. € 510.000,00 i.v.a

INDICE - INDEX

INGOMBRI MASSIMI – OVERALL DIMENSIONS 5
SCOCCA – FRAME 6
PIANTONE STERZO – STEERING COLUMN – **LEGACY** 8
PIANTONE STERZO – STEERING COLUMN 10
BARRETTA E FUSELLO – TRACK ROD AND STUB AXLE - **LEGACY** 12
BARRETTA E FUSELLO – TRACK ROD AND STUB AXLE 14
TUBOLARE PEDALE – PEDAL TUBE – **LEGACY** 16
TUBOLARE PEDALE – PEDAL TUBE 18
PEDALE GAS – GAS PEDAL 24
PEDALE FRENO – BRAKE PEDAL 26
POSIZIONATORE PEDALE – PEDAL LOCATOR 28
POMPA FRENO - MASTER CYLINDER 30
FRENO POSTERIORE – REAR BRAKE SYSTEM 32
ASSALE – REAR AXLE - **LEGACY** 34
ASSALE 2.0 – REAR AXLE 2.0 36
TENDICINGHIA – BELT TIGHTENER 38
MONTAGGIO MOTORE – ENGINE FITTING 40
TRASMISSIONE CINGHIA – BELT TRANSMISSION 42
SILENZIATORE – SILENCER - **LEGACY** 44
SILENZIATORE - SILENCER 46
BATTERIA E CABLAGGIO LUCI STOP – BATTERY AND REAR STOP LIGHT WIRING 48
PROTEZIONE E PARAURTI ANTERIORE – FRONT BUFFER AND FRONT BUMPER 50
PROTEZIONE LATERALI – SIDE BUFFERS 52
PROTEZIONE POSTERIORE E PARADISCO – REAR BUFFER AND DISC BUFFER 54
PIANALE – FLOOR TRAY 56
CARENE – FAIRINGS 58
CINTURA DI SICUREZZA E ROLL BAR – SAFETY BELT AND ROLL BAR 60
RUOTE – WHEELS 62
KIT ADESIVI – STICKERS KIT 64
TUTA KART – RACING SUIT / CASCO - HELMET 66

INGOMBRI MASSIMI – OVERALL DIMENSIONS

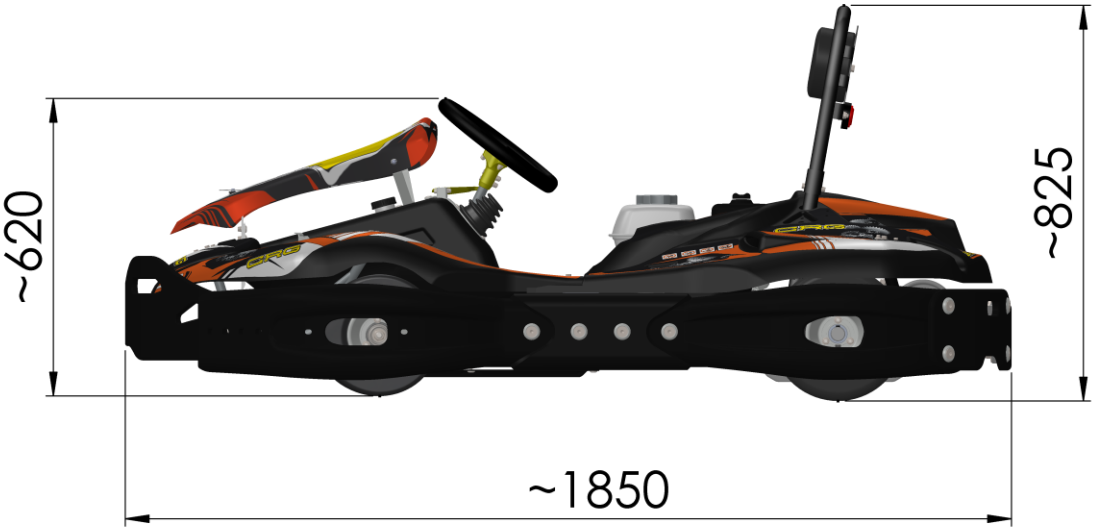







SCOCCA – FRAME

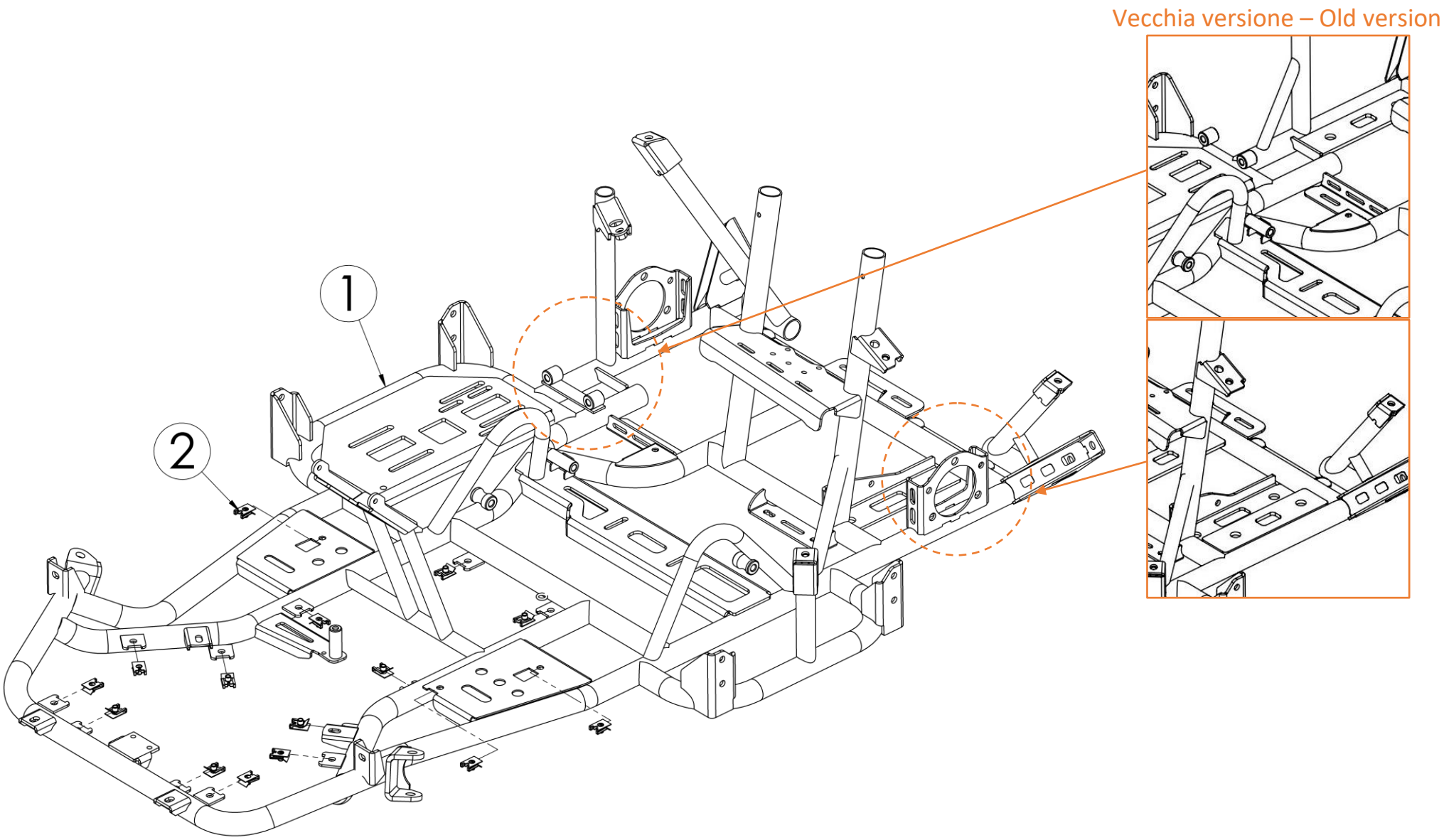

POS.	COD.	DESCRIZIONE	*DESCRIPTION*
1	FVO.05381	SCOCCA CENT/CE MINI NERO OPACO	*CENT/CE MINI BLACK FRAME MATTE*
2	AFS.02327	CLIPS PRESTOLA M6 CENTURION	*CENTURION CLIPS M6 FOR FITTING*

PIANTONE STERZO – STEERING COLUMN – **LEGACY**

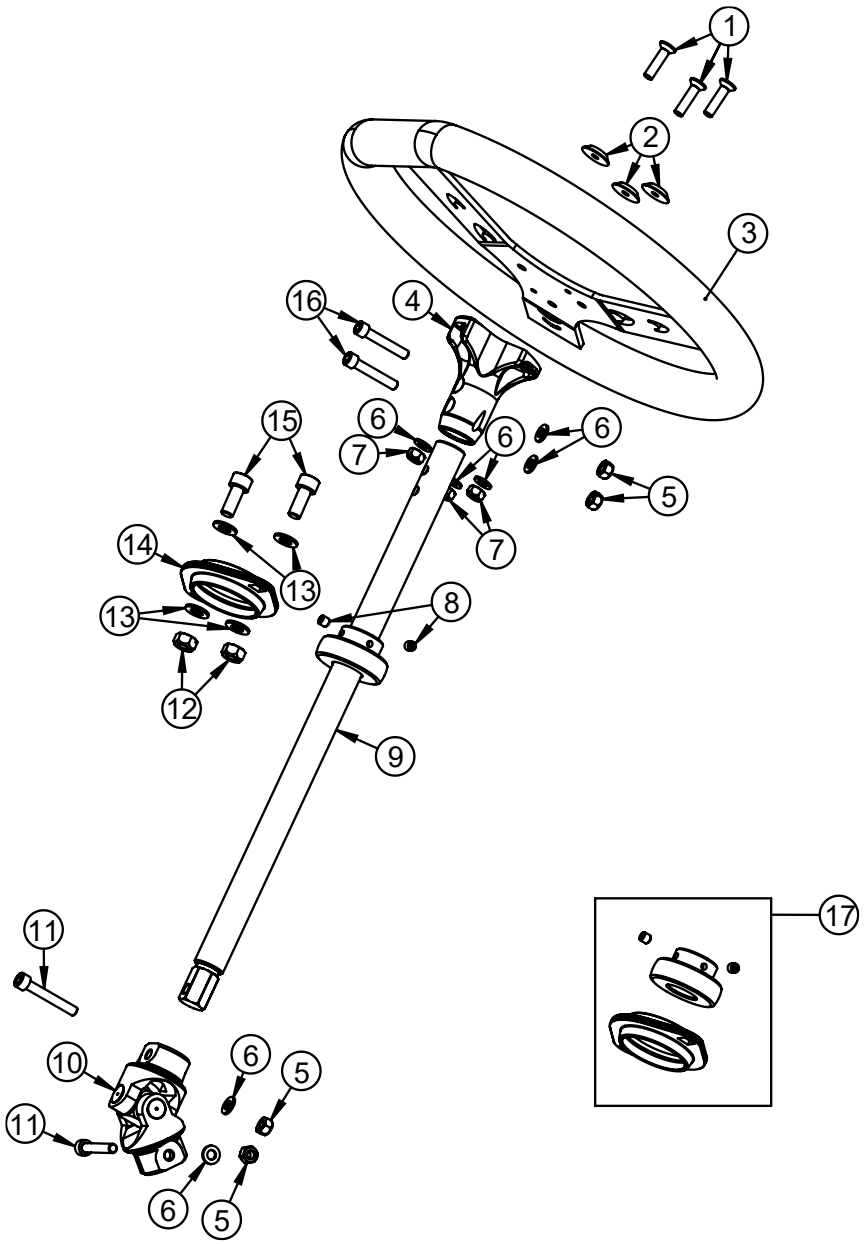

POS.	COD.	DESCRIZIONE	*DESCRIPTION*
1	AFN.00499	VITE M 6X 30 SVASATA 5933	M 6X30 CONTERSUNK HEAD SCREW
2	SAN.00249	RONDELLA 6 SVASATA NERA	*WASHER 6 COUNTERSUNK BLACK*
3	AFS.04221	VOLANTE NOLEGGIO CENTURION 360 2018	*STEERING WHEEL CENT Ø360*
4	FAN.01626	MOZZO VOLANTE INCLINATO NERO	*STEERING WHEEL HUB INCLINED BLACK*
5	AFN.00264	DADO M 6 AUTOBLOCK ALTO	*NUT M6 HIGH SELF-LOCKING*
6	AFN.00105	RONDELLA 6,5-12X1,5	*WASHER 6,5-12X1,5*
7	AFN.00106	DADO M 6 AUTOBLOCK BASSO	*NUT M6 LOW SELF-LOCKING*
8	AFN.00289	GRANO M 6X 6 CUSCINETTO 30/PULEGGIA	*GRUB SCREW M6X6 AXLE BEARING 30/PULLEY*
9	FC0.03091	PIANTONE STERZO CENTURIONMINI	*STEERING WHEEL COLUMN CTM*
10	AFS.02124	GIUNTO CARDANICO D.42 PIANTONE CENT	*STEERING COLUMN JUNKTION D.42 CENT*
11	AFN.00137	VITE M 6X 35 CILINDRICA 5931	*M 6X35 SOCKET HEAD SCREW*
12	AFN.00128	DADO M 8 AUTOBLOCK ALTO	*NUT M8 HIGH SELF-LOCKING*
13	AFN.00129	RONDELLA 8,5-17X1,5	*WASHER 8,5-17X1,5*
~~14~~	~~AFS.02527~~	~~FLANGIA CUSCINETTO PIANTONE CENTURION~~	~~*STEERING COLUMN BEARING FLANGE CENT*~~
15	AFN.00107	VITE M 8X 25 ESAGONALE 5739	*M 8X25 HEXAGONAL HEAD SCREW*
16	AFN.02154	VITE M 6X 35 CILINDRICA 12.9 5931	*M 6X35 SOCKET HEAD SCREW 12.9*
17	FK0.02121	CUSCINETTO PIANTONE COMPLETO CENTURION	*STEERING COLUMN BEARING COMPLETE CENT*

PIANTONE STERZO – STEERING COLUMN

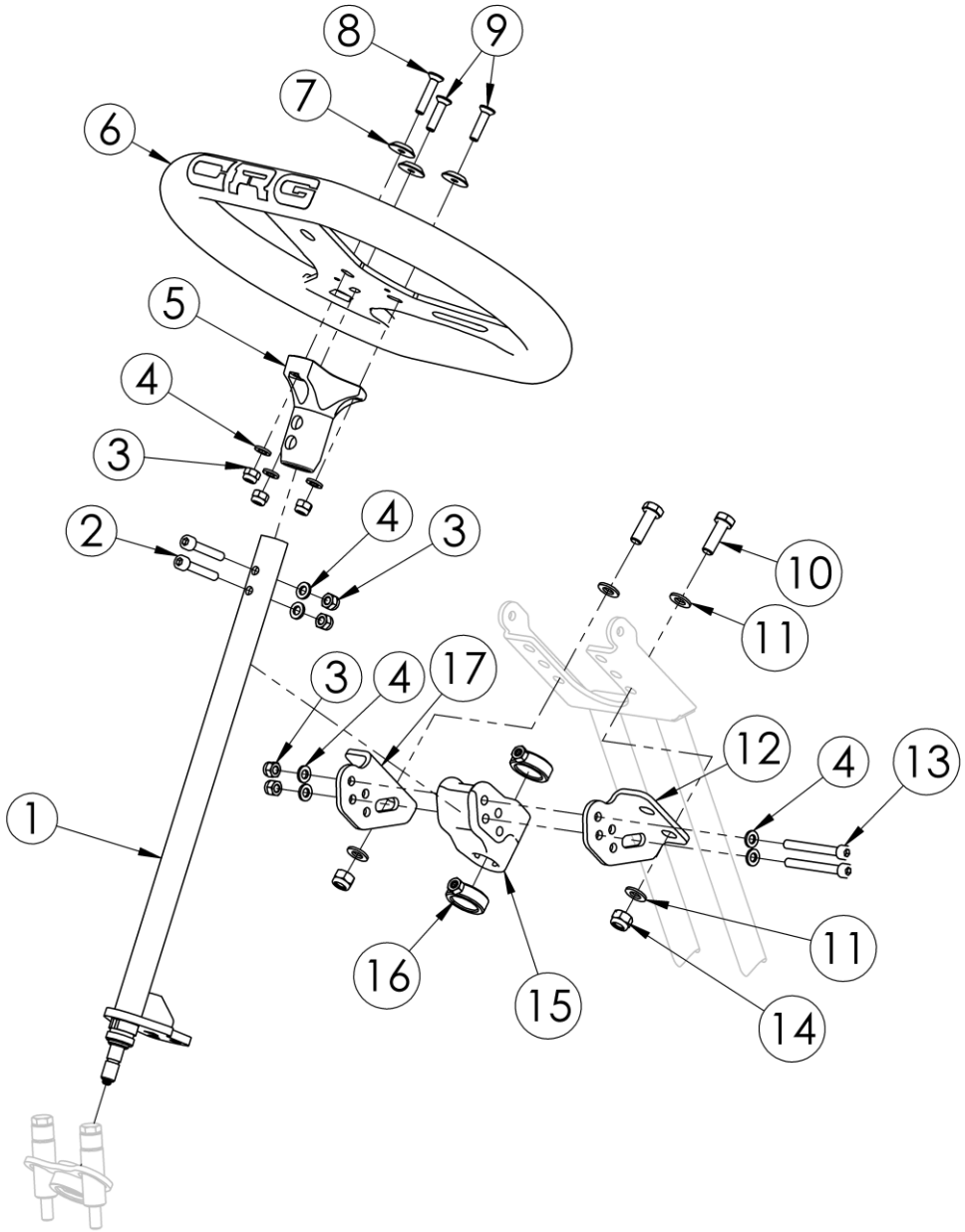

POS.	COD.	DESCRIZIONE	*DESCRIPTION*
1	FC0.06921	PIANTONE STERZO DIRETTO CTM	STRAIGHT STEERING COLUMN CTM
2	AFN.00137	VITE M 6X 35 CILINDRICA 5931	*M 6X35 SOCKET HEAD SCREW*
3	AFN.00264	DADO M 6 AUTOBLOCK ALTO	*NUT M6 HIGH SELF-LOCKING*
4	AFN.00105	RONDELLA 6,5-12X1,5	*WASHER 6,5-12X1,5*
5	FAG.01626	MOZZO VOLANTE INCLINATO ORO	*STEERING WHEEL HUB INCLINED GOLD*
6	AFS.06461	VOLANTE FLAT OUT CRG 320 R3.0 BLACK/ORANGE	*STEERING WHEEL 320 BLACK/ORANGE VS.3.0*
7	SAN.00249	RONDELLA 6 SVASATA NERA	*WASHER 6 COUNTERSUNK BLACK*
8	AFN.00499	VITE M 6X 30 SVASATA 5933	*M 6X30 CONTERSUNK HEAD SCREW*
9	AFN.00295	VITE M 6X 25 SVASATA 5933	*M6X25 COUNTERSUNK HEAD SCREW*
10	AFN.00107	VITE M 8X 25 ESAGONALE 5739	*M 8X25 HEXAGONAL HEAD SCREW*
11	AFN.00350	RONDELLA 8,5-16X1,5	*WASHER 8,5-16X1,5*
12	SC0.6406D	PIASTRA BOCCOLA PLASTICA PIANTONE CENT DX	*LH STEERING COLUMN PLASTIC BUSHING PLATE*
13	AFN.02418	VITE M 6X 55 CILINDRICA 5931	*M 6X 55 SOCKET HEAD SCREW*
14	AFN.00128	DADO M 8 AUTOBLOCK ALTO	*NUT M8 HIGH SELF-LOCKING*
15	AFS.04812	SUPPORTO PIANTONE PLASTICA 4 FORI	*PLASTIC COLUMN SUPPORT 4 HOLES*
16	FKN.00356	KIT BOCCOLA PIANTONE (2)	*STEERING COLUMN LOCK RING KIT*
17	SC0.6406S	PIASTRA BOCCOLA PLASTICA PIANTONE CENT SX	*RH STEERING COLUMN PLASTIC BUSHING PLATE*

BARRETTA E FUSELLO – TRACK ROD AND STUB AXLE - **LEGACY**

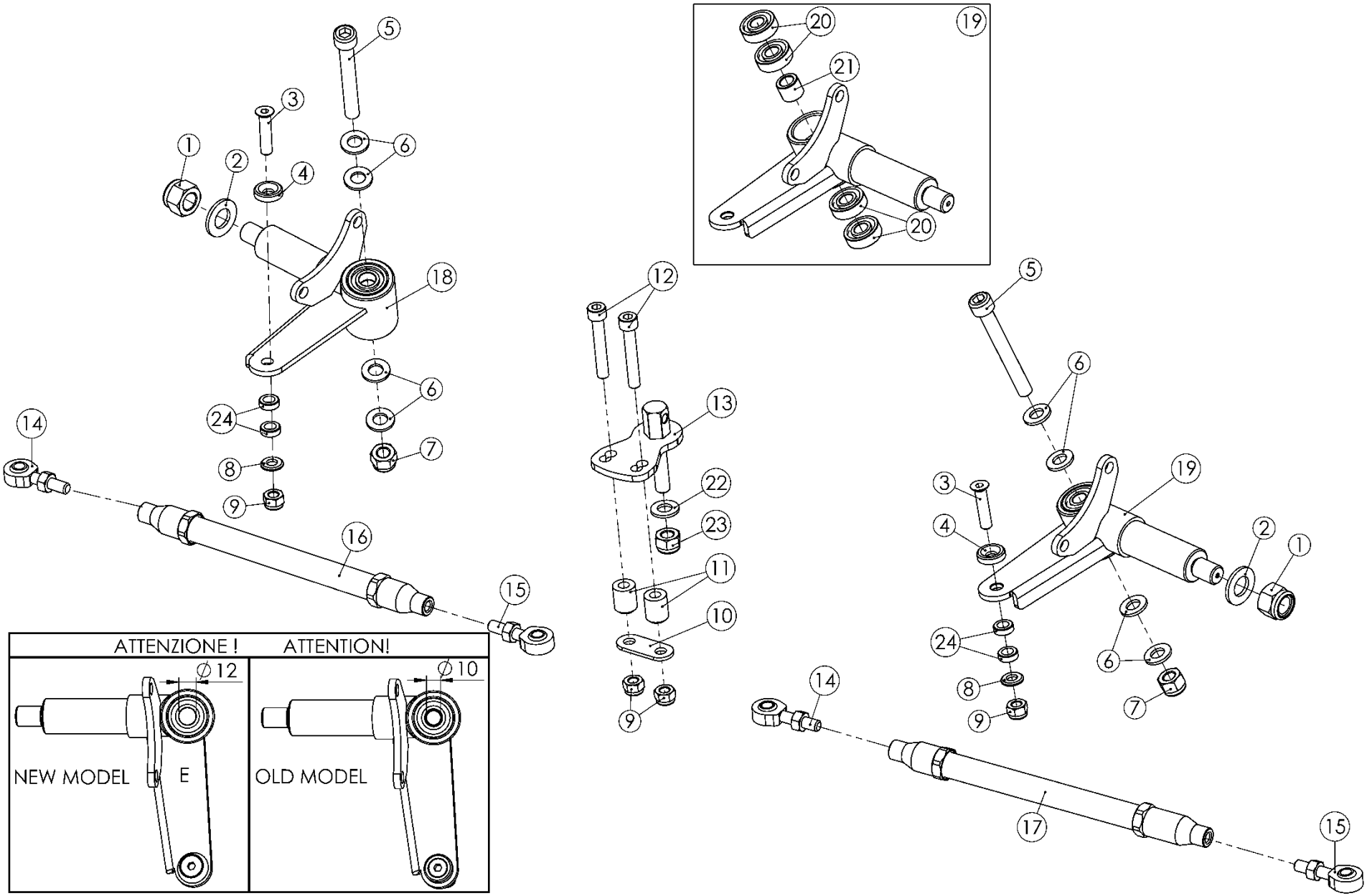

BARRETTA E FUSELLO – TRACK ROD AND STUB AXLE - **LEGACY**

POS.	COD.	DESCRIZIONE	*DESCRIPTION*
1	AFN.00058	DADO M14X1,5 AUTOBLOCK BASSO	NUT M14X1,5 SELF-LOCKING
~~2~~	~~AFN.02414~~	~~RONDELLA 14 28X3~~	~~*WASHER 14 28X3*~~
3	AFN.00483	VITE M 8X 40 SVASATA 5933	*M 8X 40 COUNTERSUNK HEAD SCREW*
4	SAN.00146	RONDELLA 8 SVASATA NERA	*WASHER 8 COUNTERSUNK BLACK*
~~5~~	~~FL1.03891~~	~~VITE FUSELLO CENTMINI M12X80 12.9~~	~~*M12X80 CENTMINI STUB AXLE SCREW*~~
6	SZ0.05365	RONDELLA 12-20X2,5 (FUSELLO CENT)	*WASHER 12 - 20X2,5*
7	AFN.02394	DADO M12 AUTOBLOCK BASSO	*M12 LOW SELF-LOCKING NUT*
8	AFN.00287	RONDELLA 8,5-14X1,5	*WASHER 8,5-14X1,5*
9	AFN.00128	DADO M 8 AUTOBLOCK ALTO	*NUT M8 HIGH SELF-LOCKING*
10	SZ0.02080	PIASTRINA RINFORZO UNIBALL CENT	*STIFFNER PLATE X UNIBALL CENT*
11	SZ0.02307	DISTANZIALE FISSAGGIO BARRETTE CENT Ø8,5X16-20	*TRACK ROD CLAMP SPACER CENT*
12	AFN.00681	VITE M 8X 50 CILINDRICA 5931	*M8X50 HEX SOCKET SCREW*
13	SZ0.03236	PERNO PIASTRINA BARRETTA STERZO CENT +5	*TRACK ROD PLATE PIVOT CENTURION*
14	AFS.0047S	UNIBALL STERZO SX C/DADO	*BALL JOINT LEFT WITH NUT*
15	AFS.0047D	UNIBALL STERZO DX C/DADO	*BALL JOINT RH WITH NUT*
~~16~~	~~AFS.01336~~	~~BARRETTA STERZO NYLON CM.24 CENTMINI~~	~~*TRACK ROD CM.24 CENTURIONMINI*~~
~~17~~	~~AFS.01334~~	~~BARRETTA STERZO NYLON CM.29 CENTMINI~~	~~*TRACK ROD CM.29 CENTURIONMINI*~~
18	FM0.0424S	FUSELLO NOL CE Ø12 SX COMPLETO	*STUB AXLE Ø12 LF COMPLETO CE*
19	FM0.0424D	FUSELLO NOL CE Ø12 DX COMPLETO	*STUB AXLE Ø12 RH COMPLETE CE*
20	AFS.03338.2RS	CUSCINETTO 6001 Ø12 2RS	*BEARING 6001 STUB AXLE BOLT 2RS*
21	SZ0.E0064	SPESSORE 12X13 INTERNO FUSELLO CE	*STUB AXLE INTERNAL SPACER 12X13 CENT*
22	AFN.01637	RONDELLA 10,5-20X2	*WASHER 10,5-20X2*
23	AFN.02393	DADO M10 AUTOBLOCK ALTO	*NUT M10 HIGH SELF-LOCKING*
24	FBN.00252	SPESSORE 8,5-14X 5 BARRETTA	*ROD SPACER 8,5-14X5 TRACK ROD*
		Modello Ø 10 - Model Ø 10	
5	AFN.02328	Vite m10x 80 cilindrica 12.9 5931	M10x 80 socket head screw 12,9
6	AFN.01637	Rondella 10,5-20x2	*Washer 10,5-20x2*
7	AFN.02393	Dado m10 autoblock alto	*Nut m10 high self-locking*
18	FM0.0424S	Fusello nol ce ø12 sx completo	*Stub axle ø12 lf completo ce*
19	FM0.0424D	Fusello nol ce ø12 dx completo	*Stub axle ø12 rh complete ce*
20	AFN.00959	Cuscinetto 6000 zz fusello d10	*Bearing stub axle bolt ø10*
21	SBN.00615	Spessore 10x14 interno fusello centurion	*Stub axle internal spacer 10-14 cent*

PRIMA DI ORDINARE RICAMBI, VI CONSIGLIAMO DI VERIFICARE IL VOSTRO MODELLO - BEFORE ORDERING PARTS, WE SUGGEST YOU TO CHECK YOUR MODEL

BARRETTA E FUSELLO – TRACK ROD AND STUB AXLE

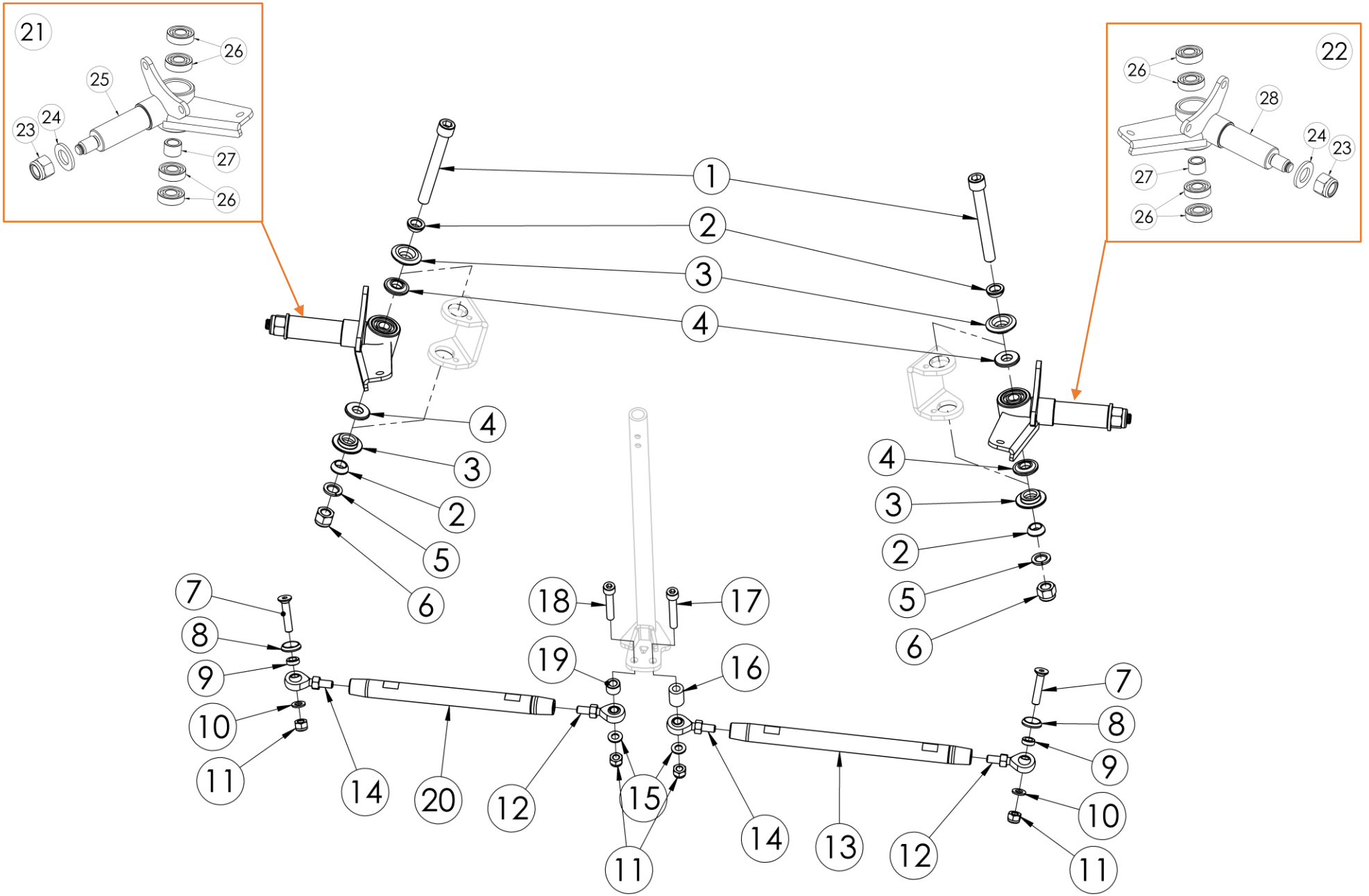

BARRETTA E FUSELLO – TRACK ROD AND STUB AXLE

POS.	COD.	DESCRIZIONE	*DESCRIPTION*
1	AFN.05487	VITE M12X100 CILIN. 12.9 FILETTO 30MM ZINCATA	M12X 95 SOCKET HEAD SCREW 30MM
2	SZ0.03537	BOCCOLA MEZZA SFERA CASTER FORO Ø12 CENT	*BUSHING HALF SPHERICAL Ø12 CENTURION*
3	SZ0.03559	CASTER FISSO SFERICO MINI KART	*FIXED CASTER MINI KART*
4	SZ0.05520	SPESSORE 12-30X5 H3 FUSELLO RENTAL	*SPACER 12-30X5 H3 RENTAL*
5	AFN.03734	RONDELLA ELASTICA SPACCATA GROWER M12	*M12 GROWER WASHER*
6	AFN.02364	DADO M12 AUTOBLOCK ALTO	*M12 HIGH SELF-LOCKING NUT*
7	AFN.00483	VITE M 8X 40 SVASATA 5933	*M 8X 40 COUNTERSUNK HEAD SCREW*
8	SAN.00146	RONDELLA 8 SVASATA NERA	*WASHER 8 COUNTERSUNK BLACK*
9	FBN.00252	SPESSORE 8,5-14X 5 BARRETTA	*ROD SPACER 8,5-14X5 TRACK ROD*
10	AFN.00287	RONDELLA 8,5-14X1,5	*WASHER 8,5-14X1,5*
11	AFN.00128	DADO M 8 AUTOBLOCK ALTO	*NUT M8 HIGH SELF-LOCKING*
12	AFS.0047S	UNIBALL STERZO SX C/DADO	*BALL JOINT LEFT WITH NUT*
13	SL1.06472	BARRETTA STERZO RINFORZATA MM.270 CENT	*REINFORCED TRACK ROD MM.270 CENT*
14	AFS.0047D	UNIBALL STERZO DX C/DADO	*BALL JOINT RH WITH NUT*
15	AFN.00350	RONDELLA 8,5-16X1,5	*WASHER 8,5-16X1,5*
16	SZ0.02307	DISTANZIALE FISSAGGIO BARRETTE CENT Ø8,5X16-20	*TRACK ROD CLAMP SPACER CENT*
17	AFN.00681	VITE M 8X 50 CILINDRICA 5931	*M8X50 HEX SOCKET SCREW*
18	AFN.00159	VITE M 8X 45 CILINDRICA 5931	*M 8X45 SOCKET HEAD SCREW*
19	SZ0.06221	DISTANZIALE FISSAGGIO BARRETTE CENT Ø8,5X16-10	*TRACK ROD CLAMP SPACER CENT*
20	SL1.06916	BARRETTA STERZO RINFORZATA MM.230 CENT	*REINFORCED TRACK ROD MM.230 CENT*
21	FM0.0424S	FUSELLO NOL CE Ø12 SX COMPLETO	*STUB AXLE Ø12 LF COMPLETO CE*
22	FM0.0424D	FUSELLO NOL CE Ø12 DX COMPLETO	*STUB AXLE Ø12 RH COMPLETE CE*
23	AFN.00058	DADO M14X1,5 AUTOBLOCK BASSO	NUT M14X1,5 SELF-LOCKING
24	AFN.01564	RONDELLA 15X30X2,5	*WASHER 15-30X2,5*
25	SC0.0424S	FUSELLO NOL CE Ø12 SX CROM	*STUB AXLE FRONT BRAKE LF CHROM CENT*
26	AFS.03338.2RS	CUSCINETTO 6001 Ø12 2RS	*BEARING 6001 STUB AXLE BOLT 2RS*
27	SZ0.E0064	SPESSORE 12X13 INTERNO FUSELLO CE	*STUB AXLE INTERNAL SPACER 12X13 CENT*
28	SC0.0424D	FUSELLO NOL CE Ø12 DX CROM	*STUB AXLE FRONT BRAKE RH CHROM CENT*

TUBOLARE PEDALE – PEDAL TUBE – **LEGACY**

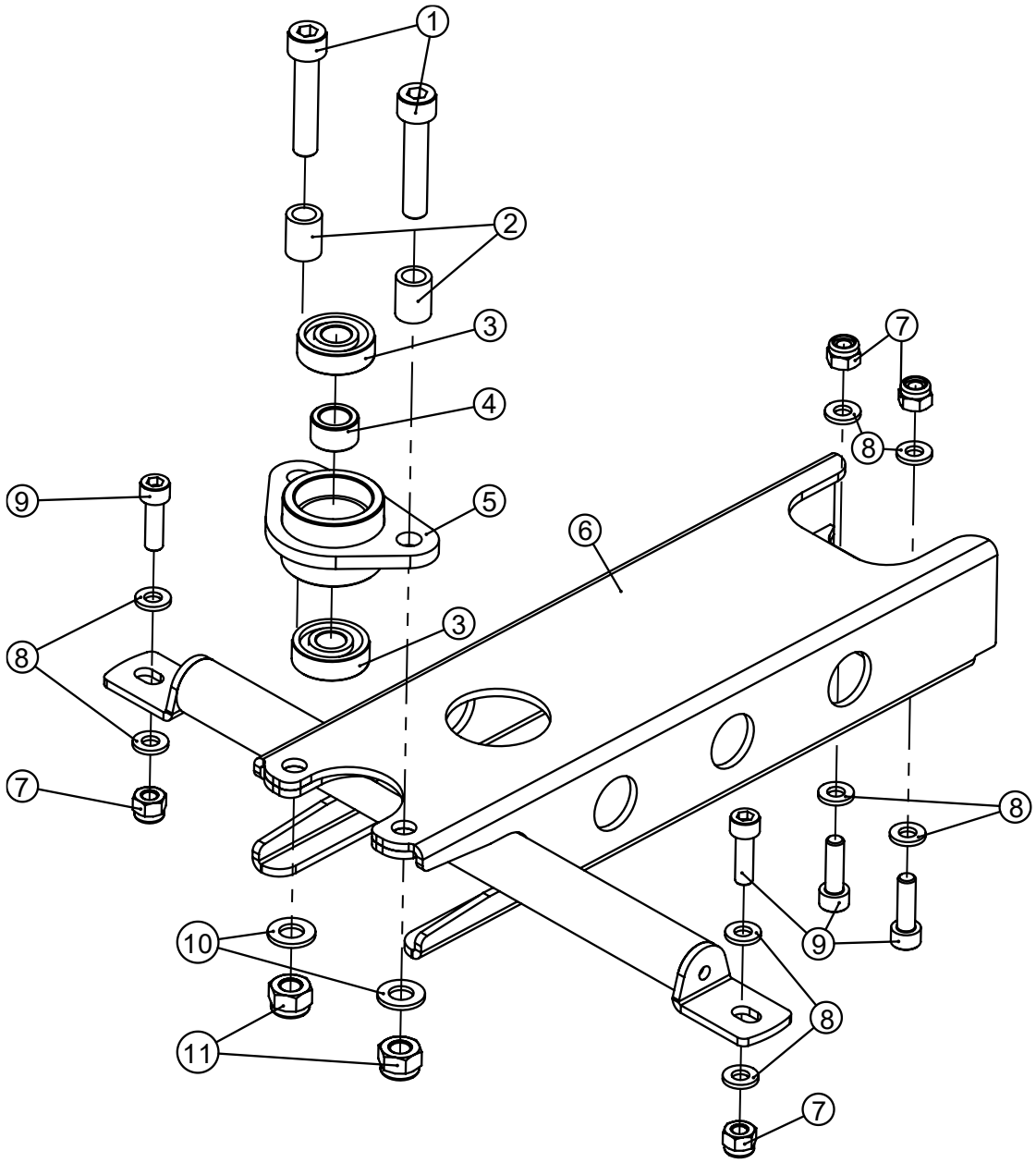

POS.	COD.	DESCRIZIONE	*DESCRIPTION*
1	AFN.02153	VITE M 8X 35 CILINDRICA 5931	M 8X35 SOCKET HEAD SCREW
2	SZ0.02305	DISTANZIALE FERMO PIANTONE CENTURION	*STEERING COLUMN BLOCK SPACER CENT*
3	AFN.00959	CUSCINETTO 6000 ZZ FUSELLO D10	*BEARING STUB AXLE BOLT Ø10*
4	SZ0.02306	DISTANZIALE BUSSOLA PIANTONE CENT	*STEERING COLUMN SLEEVE SPACER CENT*
5	SC0.02074	BLOCCO CUSCINETTO STERZO CENTURION	*STEERING BEARING BLOCK CENT*
6	SC0.02066	TUBOLARE PEDALE CENTURION	*PEDAL TUBE CENT*
7	AFN.00264	DADO M 6 AUTOBLOCK ALTO	*NUT M6 HIGH SELF-LOCKING*
8	AFN.00105	RONDELLA 6,5-12X1,5	*WASHER 6,5-12X1,5*
9	AFN.00183	VITE M 6X 20 CILINDRICA 5931	*M6X20 SOCKET HEAD SCREW*
10	AFN.00350	RONDELLA 8,5-16X1,5	*WASHER 8,5-16X1,5*
11	AFN.00160	DADO M 8 AUTOBLOCK BASSO	*NUT M8 LOW SELF-LOCKING*

TUBOLARE PEDALE – PEDAL TUBE

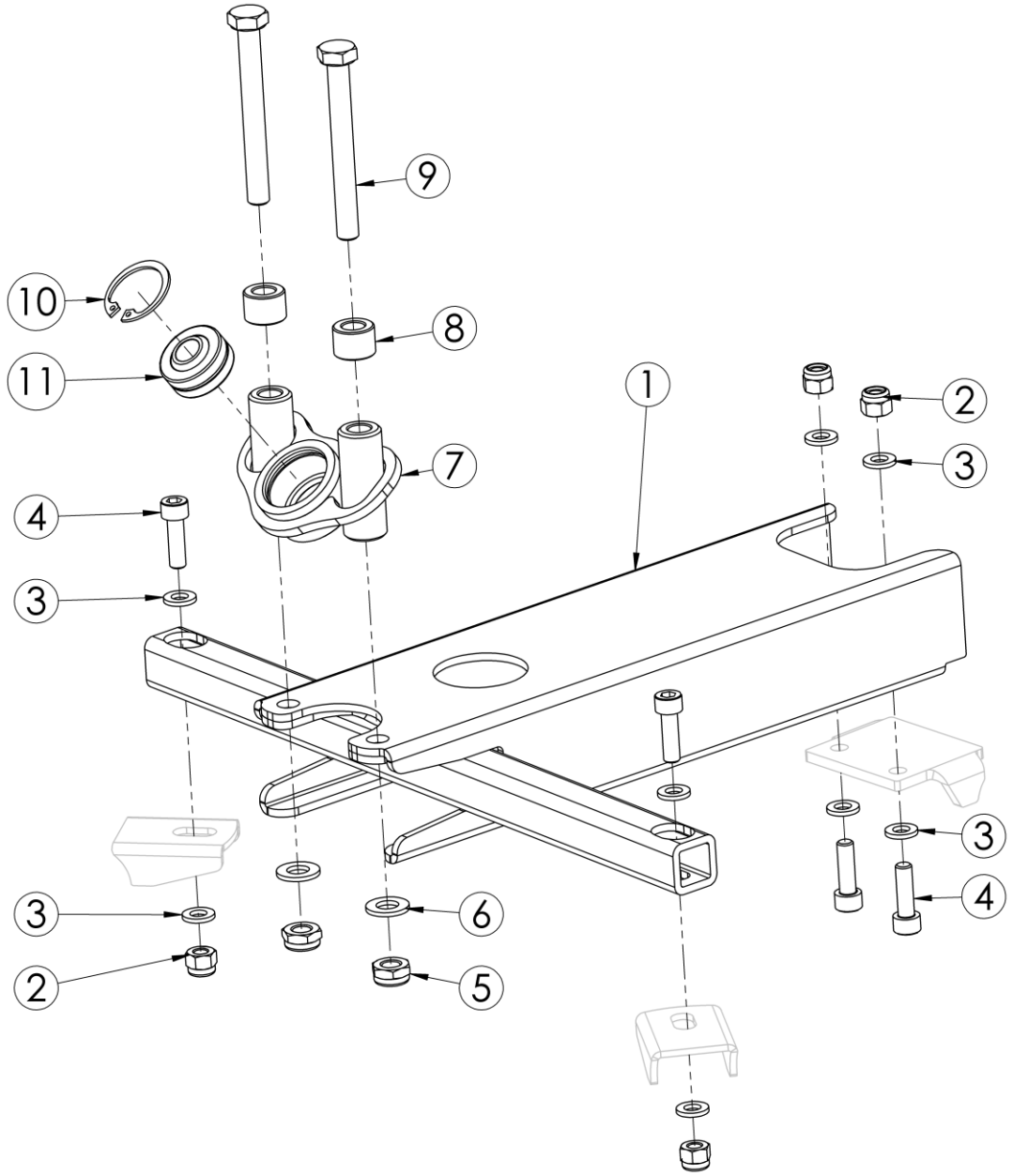

POS.	COD.	DESCRIZIONE	*DESCRIPTION*
1	SC0.02120	TUBOLARE PEDALE CENTURIONMINI	*PEDAL TUBE CENTURIONMINI*
2	AFN.00264	DADO M 6 AUTOBLOCK ALTO	*NUT M6 HIGH SELF-LOCKING*
3	AFN.00105	RONDELLA 6,5-12X1,5	*WASHER 6,5-12X1,5*
4	AFN.00478	VITE M 6X 25 CILINDRICA 5931	*M 6X25 SOCKET HEAD SCREW*
5	AFN.00160	DADO M 8 AUTOBLOCK BASSO	*NUT M8 LOW SELF-LOCKING*
6	AFN.00350	RONDELLA 8,5-16X1,5	*WASHER 8,5-16X1,5*
7	SZ0.05140	SUPPORTO CUSCINETTO STERZO CENT	*STEERING BEARING SUPPORT*
8	SZ0.06221	DISTANZIALE FISSAGGIO BARRETTE CENT Ø8,5X16-10	*TRACK ROD CLAMP SPACER CENT*
9	AFN.00914	VITE M 8X 70 ESAGONALE 5739 TUTTO FILETTO	*M 8X70 HEXAGONAL HEAD SCREW*
10	AFN.06482	SEEGER PER FORI Ø26MM SP.1,5 UTILIZZI PESANTI	*INTERNAL SEEGER Ø26X1,5*
11	AFN.02198	UNIBALL PIANTONE Ø10 NOLEGGIO	*STEERING COULMN BALL DMSB*

CARRELLO PEDALE - PEDAL TROLLEY - **LEGACY**

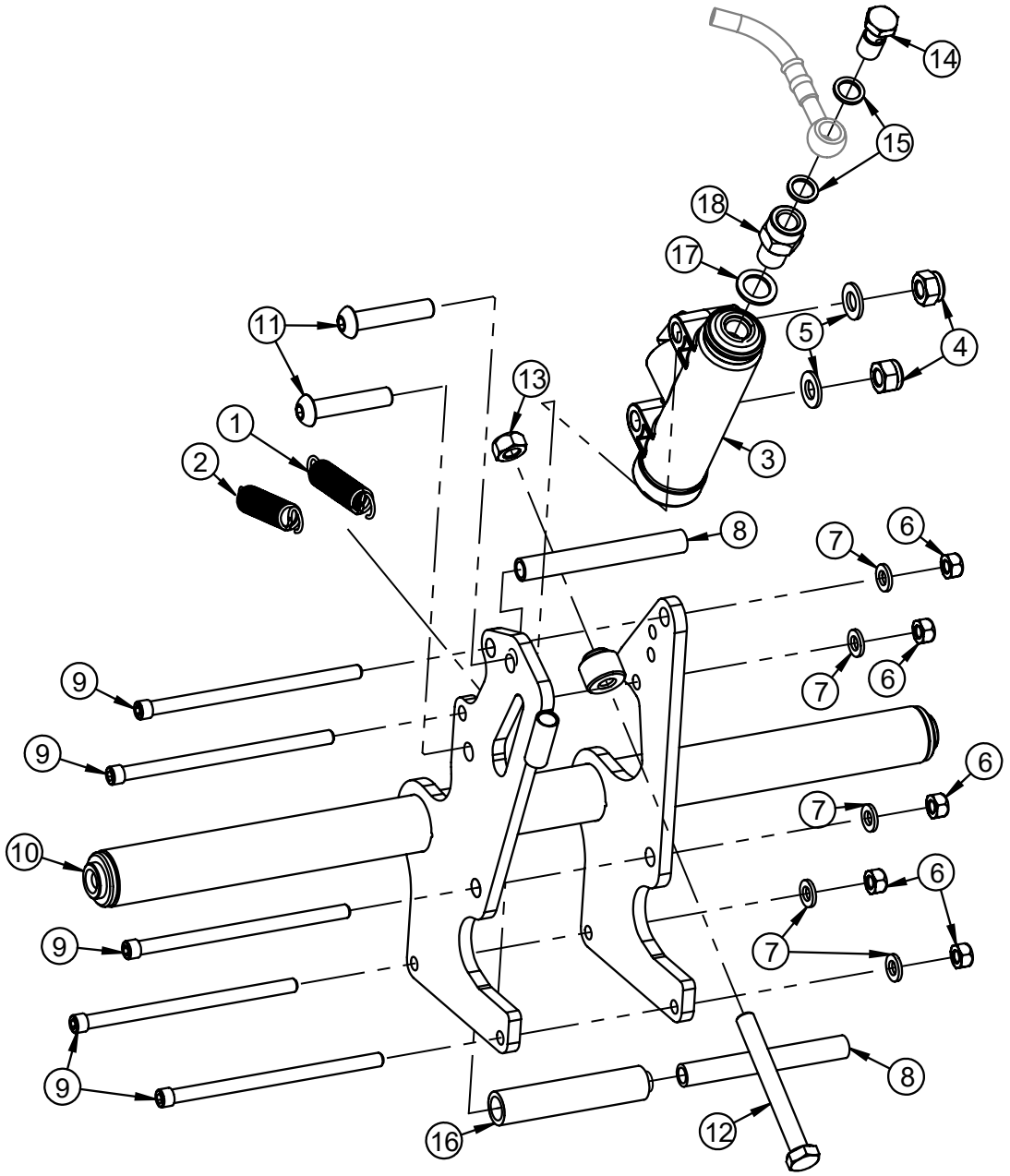

POS.	COD.	DESCRIZIONE	*DESCRIPTION*
1	SZ0.02203	MOLLA PEDALE CENT GAS	PEDAL SPRING GAS/EXHAUST CENT
2	SZ0.02204	MOLLA PEDALE CENT FRENO	*PEDAL SPRING BRAKE CENT*
3	FMN.02993	POMPA FRENO D19 CENTURION COMPLETA	*MASTER CYLINDER D19 COMPLETE CENT*
4	AFN.00160	DADO M 8 AUTOBLOCK BASSO	*NUT M8 LOW SELF-LOCKING*
5	AFN.00129	RONDELLA 8,5-17X1,5	*WASHER 8,5-17X1,5*
6	AFN.00106	DADO M 6 AUTOBLOCK BASSO	*NUT M6 LOW SELF-LOCKING*
7	AFN.00105	RONDELLA 6,5-12X1,5	*WASHER 6,5-12X1,5*
8	SZ0.02303	DISTANZIALE PEDALIERA CENT ZINC	*CENT FOOTREST SPACER*
9	AFN.02290	VITE M 6X100 CILINDRICA 5931	*M6X100 HEX SOCKET SCREW*
10	SC0.02069	CARRELLO PEDALE CENTURION	*PEDAL TROLLEY CENT*
11	AFN.00443	VITE M 8X 50 ESAGONALE 5739	*M 8X50 HEXAGONAL HEAD SCREW*
12	AFN.00914	VITE M 8X 70 ESAGONALE 5739 TUTTO FILETTO	*M 8X70 HEXAGONAL HEAD SCREW*
13	AFN.0049D	DADO M 8 DX	*NUT M8*
14	SZ0.00185	RACCORDO M10 V11	*FITTING M10 V11*
15	AFN.00186	RONDELLA 10,5-14X2 RAME	*COPPER WASHER 10,5-14X2*
16	FL1.03591	RULLO NYLON CARRELLO PEDALE CENT	*PEDAL TROLLEY NYLON SPACER*
17	AFN.03545	RONDELLA 12 -18X1,5 RAME CENTURION	*MASTER CYLINDER WASHER 12X18X1.5*
18	SZ0.02356	RIDUZIONE POMPA FRENO CENT	*CENTURION MASTER CYLINDER REDUCTION*

CARRELLO PEDALE - PEDAL TROLLEY

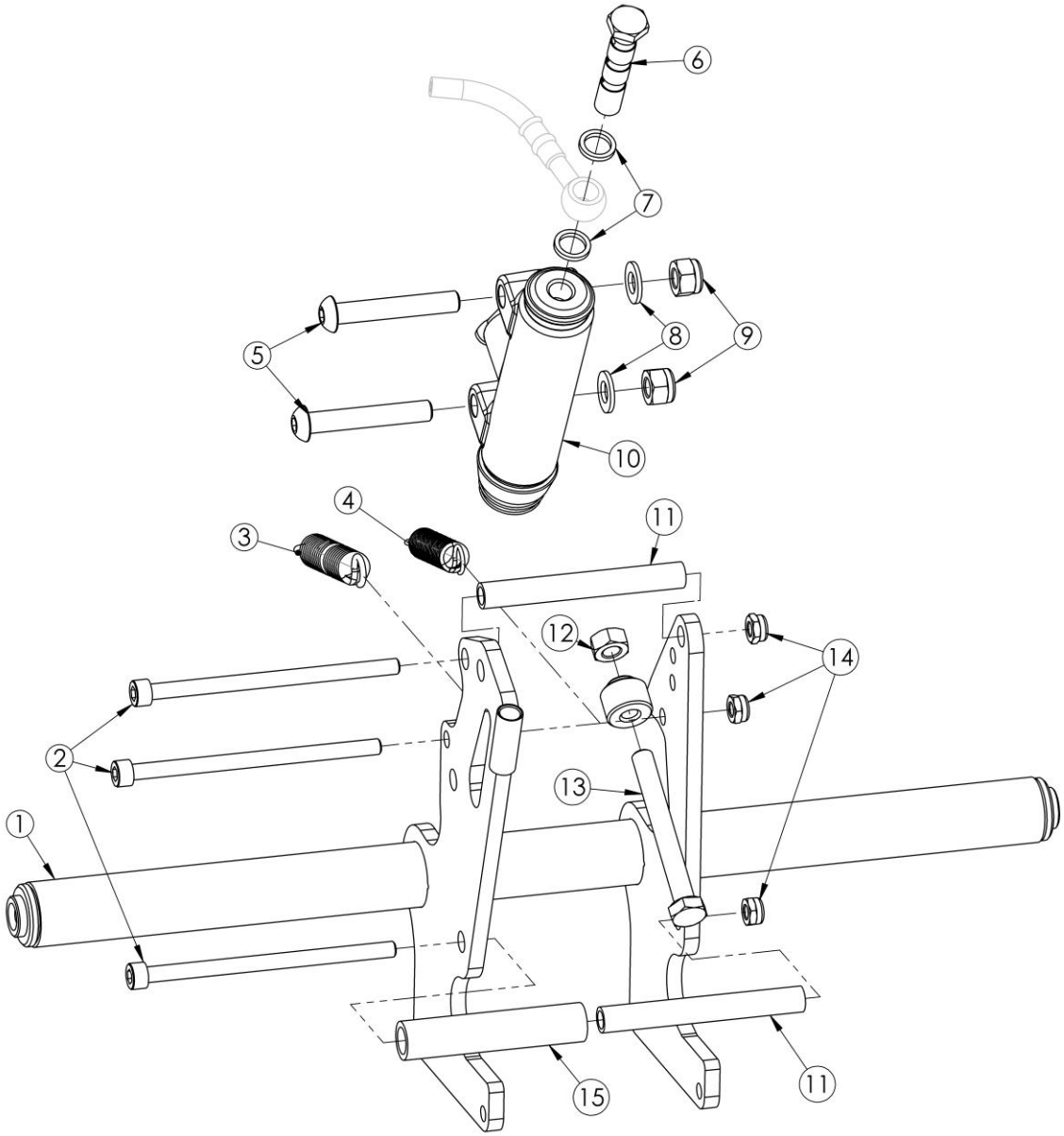

POS.	COD.	DESCRIZIONE	*DESCRIPTION*
1	SC0.02069	CARRELLO PEDALE CENTURION	PEDAL TROLLEY CENT
2	AFN.02290	VITE M 6X100 CILINDRICA 5931	*M6X100 HEX SOCKET SCREW*
3	SZ0.02204	MOLLA PEDALE CENT FRENO	*PEDAL SPRING BRAKE CENT*
4	SZ0.02203	MOLLA PEDALE CENT GAS	*PEDAL SPRING GAS/EXHAUST CENT*
5	AFN.00534	VITE M 8X 50 BOMBATA 7380	*M8X50 CONVEX HEAD SCREW*
6	SZ0.02757	RACCORDO TRIPLO FRENO ANTERIORE CENT	*TRIPLE FITTING X FRONT BRAKE TUBE CENT*
7	AFN.00186	RONDELLA 10,5-14X2 RAME	*COPPER WASHER 10,5-14X2*
8	AFN.00350	RONDELLA 8,5-16X1,5	*WASHER 8,5-16X1,5*
9	AFN.00128	DADO M 8 AUTOBLOCK ALTO	*NUT M8 HIGH SELF-LOCKING*
10	FMN.02993	POMPA FRENO D19 CENTURION COMPLETA	*MASTER CYLINDER D19 COMPLETE CENT*
11	SZ0.02303	DISTANZIALE PEDALIERA CENT ZINC	*CENT FOOTREST SPACER*
12	AFN.0049D	DADO M 8 DX	*NUT M8*
13	AFN.00914	VITE M 8X 70 ESAGONALE 5739 TUTTO FILETTO	*M 8X70 HEXAGONAL HEAD SCREW*
14	AFN.00106	DADO M 6 AUTOBLOCK BASSO	*NUT M6 LOW SELF-LOCKING*
15	FL1.03591	RULLO NYLON CARRELLO PEDALE CENT	*PEDAL TROLLEY NYLON SPACER*

PEDALE GAS – GAS PEDAL

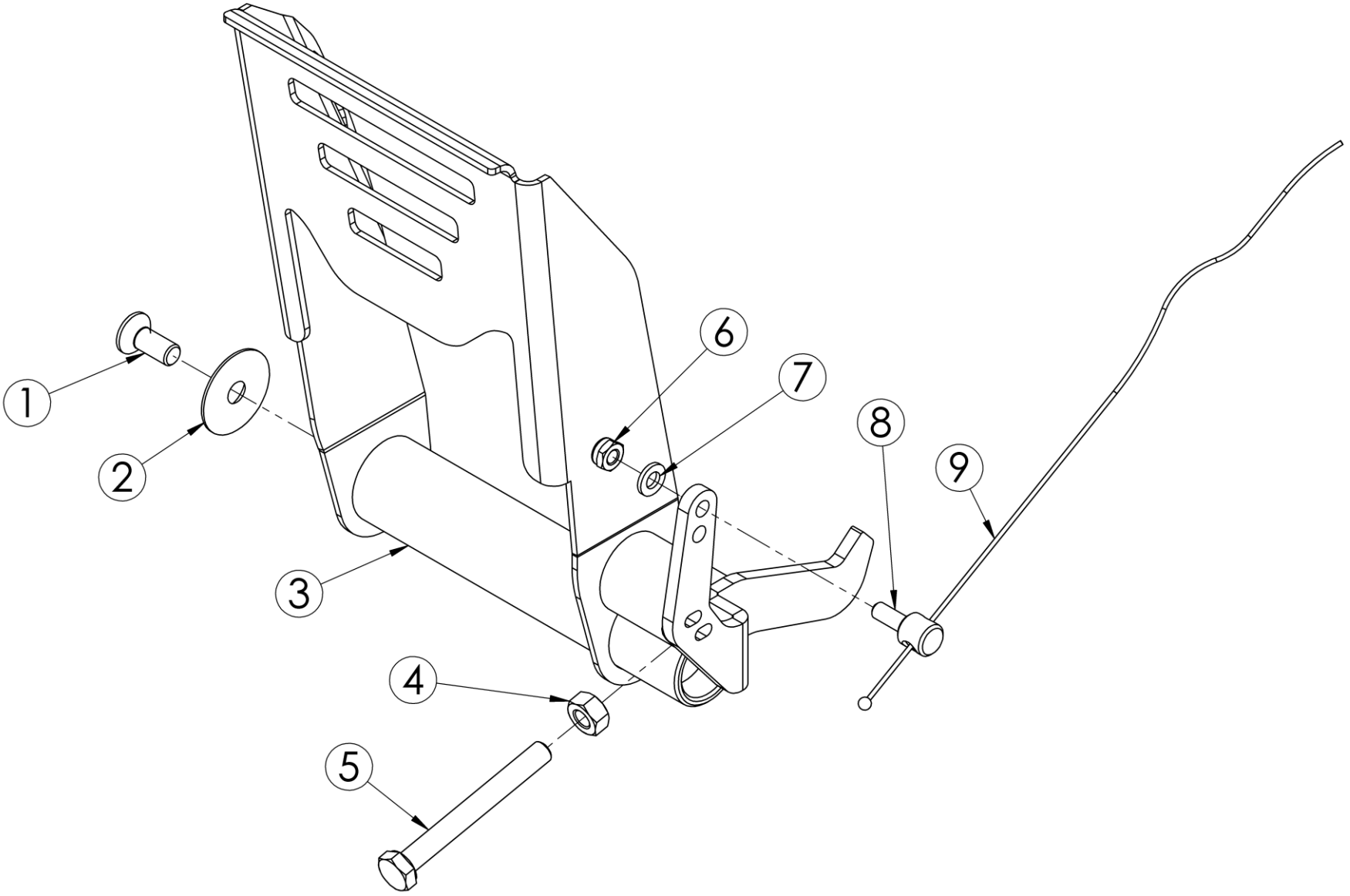

POS.	COD.	DESCRIZIONE	*DESCRIPTION*
1	AFN.00290	VITE M 8X20 SVASATA 5933	M8X20 COUNTERSUNK HEAD SCREW
2	FAN.00260	RONDELLA 8 SEDILE ALL.NERA	*ALUMINUM SEAT WASHER BLACK 8*
3	SC0.4952D	PEDALE CENTURION 2019 GAS DX	*GAS PEDAL CENT*
4	AFN.0049D	DADO M 8 DX	*NUT M8*
5	AFN.00914	VITE M 8X 70 ESAGONALE 5739 TUTTO FILETTO	*M 8X70 HEXAGONAL HEAD SCREW*
6	AFN.00106	DADO M 6 AUTOBLOCK BASSO	*NUT M6 LOW SELF-LOCKING*
7	AFN.00105	RONDELLA 6,5-12X1,5	*WASHER 6,5-12X1,5*
8	SBN.02396	PERNO FERMAFILO CENT	*CABLE ADJUSTER PIVOT BLACK*
9	AFS.02130	FILO GAS MM2200 CENTURION SP.1,5	*GAS CABLE CENT SP.1,5*

PEDALE FRENO – BRAKE PEDAL

VERSIONE VECCHIA - OLD VERSION

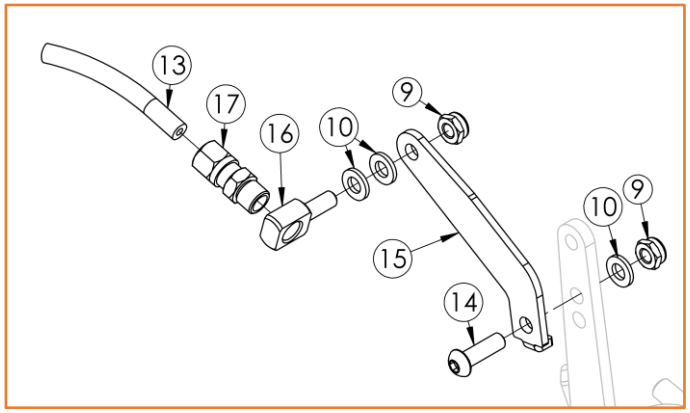

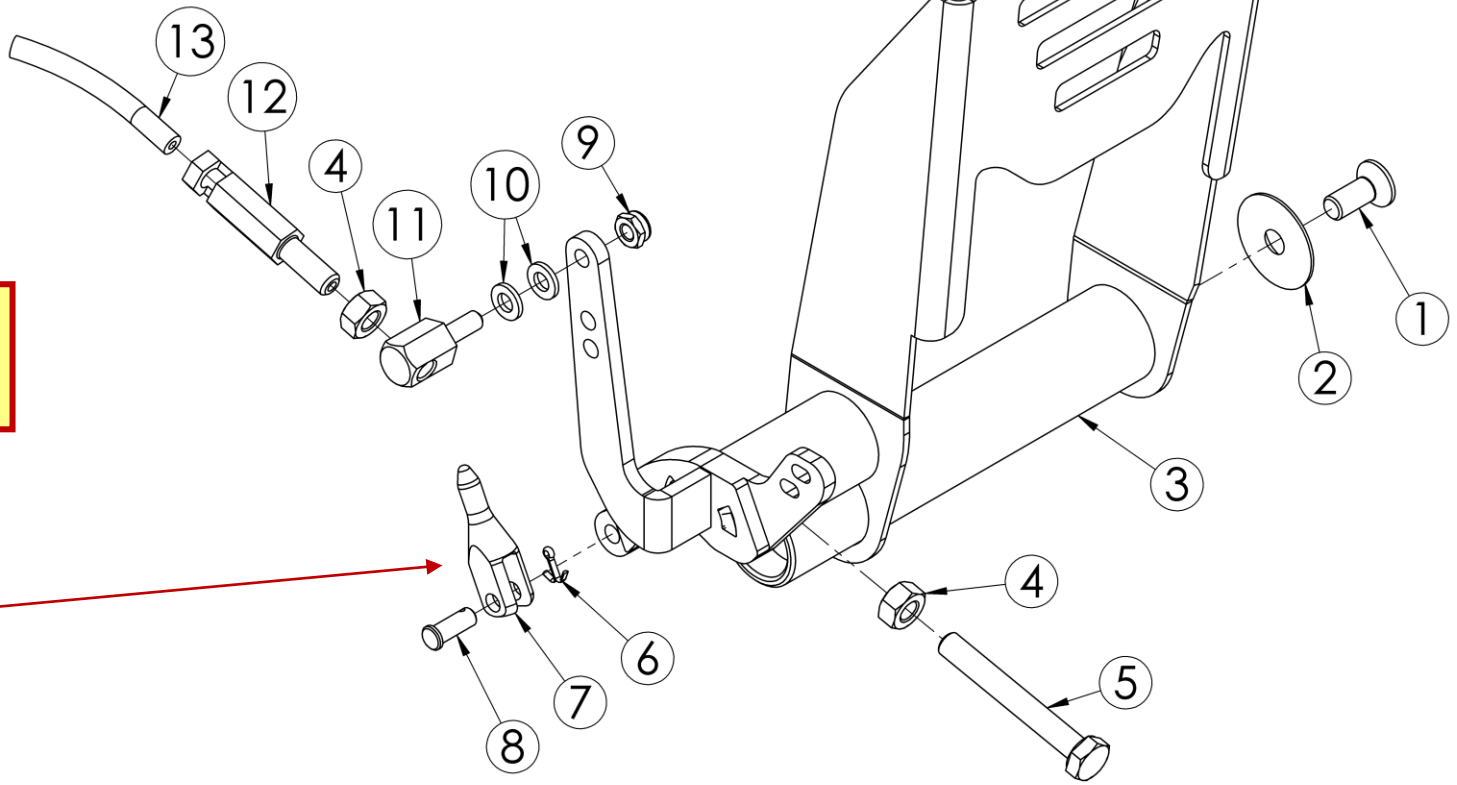

!!!

Versione corta - *Short model* – 40 mm **AFS.0497404**

Versione lunga – *Long model* – 48.5 mm **AFS.0586101**

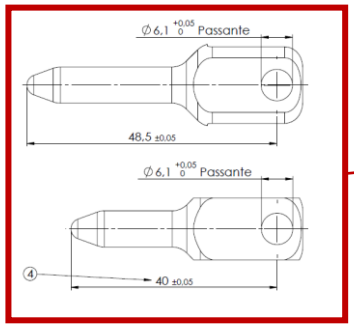

POS.	COD.	DESCRIZIONE	*DESCRIPTION*
1	AFN.00290	VITE M 8X20 SVASATA 5933	M8X20 COUNTERSUNK HEAD SCREW
2	FAN.00260	RONDELLA 8 SEDILE ALL.NERA	*ALUMINUM SEAT WASHER BLACK 8*
3	SC0.4952S	PEDALE CENTURION 2019 FRENO SX	*BRAKE PEDAL CENT*
4	AFN.0049D	DADO M 8 DX	*NUT M8*
5	AFN.02291	VITE M 8X 60 ESAGONALE 5739	*M 8X 60 HEXAGONAL HEAD SCREW*
6	AFN.00201	COPIGLIA	*MASTER CYLINDER SPLIT PIN*
7	AFS.0586101	PUNTALE POMPA FRENI SP.6 CENT	*TOE MASTER CYLINDER SP.6 CENT*
8	SBN.00214	SPINA RIPARTITORE MM17,5	*DIVIDER PIN 17,5MM*
9	AFN.00106	DADO M 6 AUTOBLOCK BASSO	*NUT M6 LOW SELF-LOCKING*
10	AFN.00105	RONDELLA 6,5-12X1,5	*WASHER 6,5-12X1,5*
11	SL1.0272702	REGISTRO FILO M8 CENTURION	CABLE ADJUSTER M8 CENT
12	SZ0.06413	PERNO ADATTATORE GUAINA GAS LUNGA CENT	*THROTTLE CABLE SHEATH ADAPTER PIVOT*
13	AMS.00591	GUAINA FILO D7 GAS	*OUTER CABLE Ø7 FOR GAS*
14	AFN.02144	VITE M 6X 20 BOMBATA 7380	M6X20 BUTTON HEAD SCREW
15	SZ0.04019	LEVA PEDALE FRENO CENT (PROLUG.LEVA GAS/FRENO)	*BRAKE PEDAL LEVER (EXTENSION BRAKE/GAS) CENT*
16	SZ0.04596	RACCORDO REGISTRO GUAINA GAS H18	*GAS CABLE FITTING H18*
17	AFN.00425	RACCORDO DIRITTO COMPLETO	*STRAIGHT PIPE FITTING COMPLETE*

POSIZIONATORE PEDALE – PEDAL LOCATOR

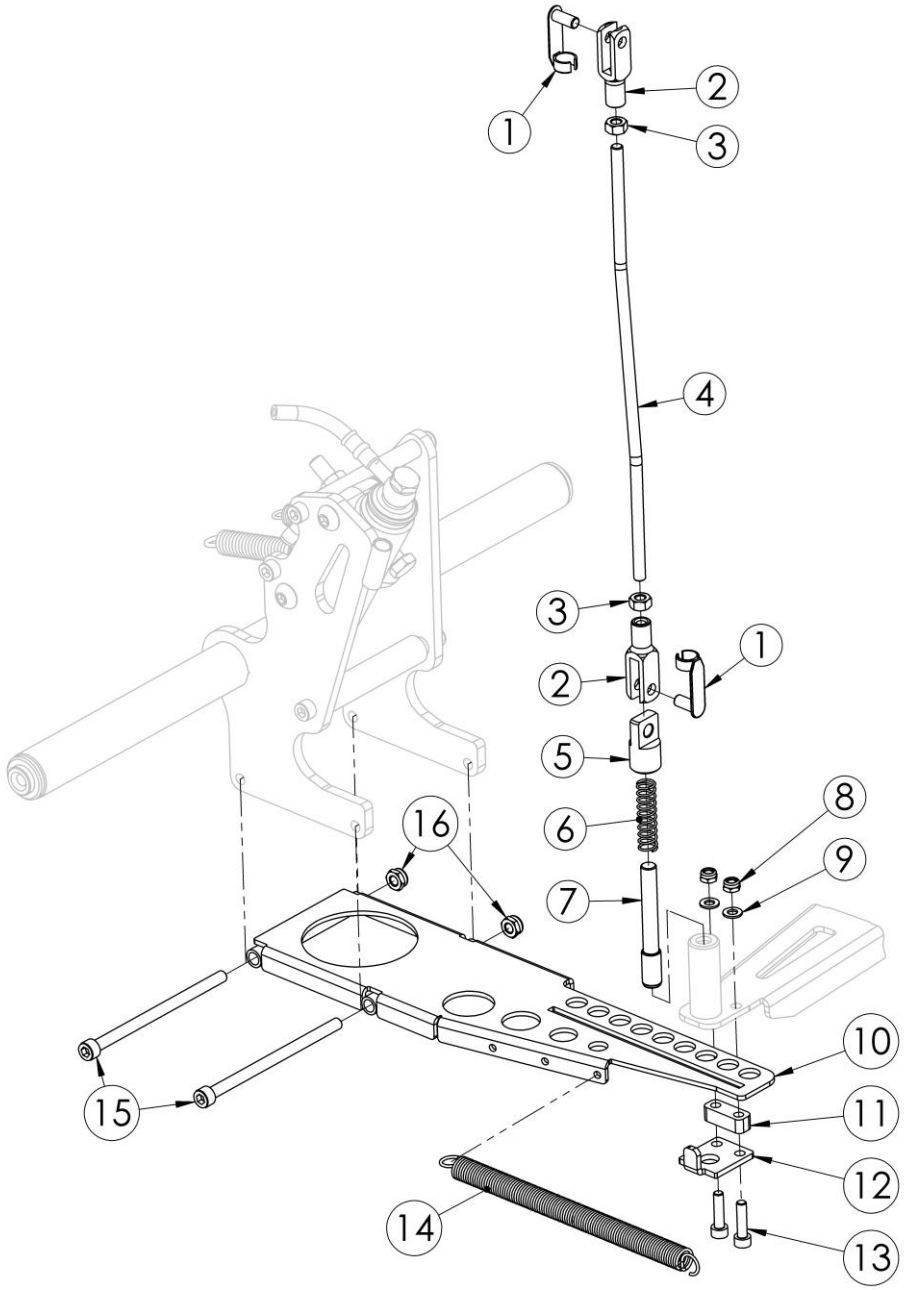

POSIZIONATORE PEDALE – PEDAL LOCATOR

POS.	COD.	DESCRIZIONE	*DESCRIPTION*
1	AFS.00224	CLIPS STD	CLIPS STD
2	AFS.00216	FORCHETTA SEMPLICE STD SP.6	*SIMPLE FORK STANDARD*
3	AFN.00093	DADO M 6	*NUT M 6*
4	SBN.01566	ASTA FRENO ZINCATA CM.24	*BRAKE ROD CM.24*
5	SZ0.03088	BUSSOLA COLLEGAMENTO PERNO PEDALI CTM	*PIVOT BUSHING FOR PEDAL CONNECT. CTM*
6	SZ0.02202	MOLLA PERNO PEDALIERA CENT	*CONTROL PEDAL PIVOT SPRING CENT*
7	SZ0.02214	PERNO POSIZIONATORE PEDALIERA CENT	*CONTROL PEDAL LOCATOR PIVOT CENT*
8	AFN.00360	DADO M 5 AUTOBLOCK BASSO	*NUT M 5 LOW SELF-LOCKING*
9	AFN.02264	RONDELLA 5,3-10X1	*WASHER 5,3-10X1*
10	SC0.03079	PIASTRA POSIZIONATRICE PEDALIERA CTM	*SIDE LINE FOR FOOT PLATE CTM*
11	SZ0.02535	SPESSORE 8X10X30 CENTURION	*SPACER CENT 8X10X30*
12	SZ0.03080	PIASTRINA GUIDA PERNO POSIZIONATORE CTM	*DRIVE PLATE FOR PIVOT CTM*
13	AFN.02289	VITE M 5X 20 CILINDRICA 5931	*M5X20 HEX SOCKE SCREW*
14	SZ0.02594	MOLLA CULLA MARMITTA 15 XL	*EXHAUST CRADLE SPRING 15 XL*
15	AFN.02290	VITE M 6X100 CILINDRICA 5931	*M6X100 HEX SOCKET SCREW*
16	AFN.00106	DADO M 6 AUTOBLOCK BASSO	*NUT M6 LOW SELF-LOCKING*

POMPA FRENO - MASTER CYLINDER

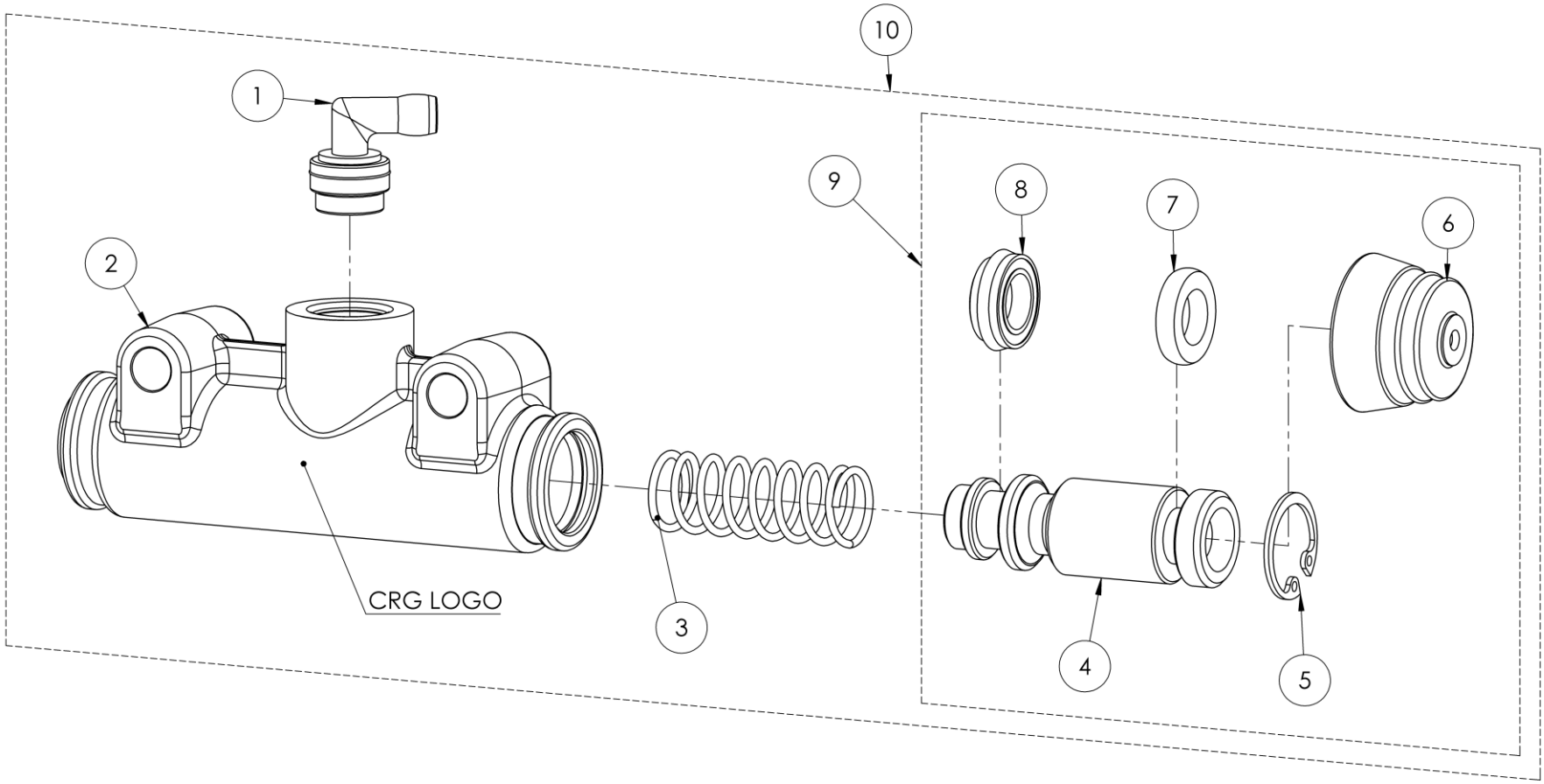

Pompa freno	Pompa completa	Kit revisione
Con logo CRG	FMN.02993	CRG.05567
Senza logo CRG	Non più in vendita, sostituire con FMN.02993	

Master cylinder	Complete master cylinder	Rebuild kit
With CRG logo	FMN.02993	CRG.05567
Without CRG logo	No longer for sale, replace with FMN.02993	

POS.	COD.	DESCRIZIONE	*DESCRIPTION*
1	AFS.05607	RACCORDO INNESTO SERBATOIO 90°	CENTURION MASTER CYLINDER 90° FITTING
2	SAN.02993	CORPO POMPA FRENO D19 NERO CENTURION	*MASTER CYLINDER BODY D.19 CENT*
3	AML.0299203	MOLLA POMPA FRENO D19 CENT	*MASTER CYLINDER SPRING D19 CENT*
4	SD1.06604	PISTONCINO POMPA FRENO D19 2.0 CENT	*MASTER CYL. PISTON D.19 2.0 CENT*
5	AFN.03000	SEEGER D20 POMPA FRENO CENTURION	*SEEGER BRAKE PUMP CENT D20*
6	AFS.02998	COPRIPOLVERE POMPA FRENO D19 CENTURION	*D19 MASTER CYLINDER DUST SHIELD*
7	AFS.05559	GOMMINO POMPA FRENO BOMBATO 19.05-12X4	*CENT MASTER CYLINDER FRONT OIL SEAL 19.05-12X4*
8	AFS.05560	GOMMINO POMPA FRENO DOPPIO LABBRO 19.05-10X7	*CENT MASTER CYLINDER REAR OIL SEAL*
9	CRG.05567	KIT REVISIONE POMPA FRENO D19 CENT 2024	*D19 CENTURION MASTER CYLINDER REBUILDING KIT*
10	FMN.02993	POMPA FRENO D19 CENTURION COMPLETA	*MASTER CYLINDER D19 COMPLETE CENT*

FRENO POSTERIORE – REAR BRAKE SYSTEM

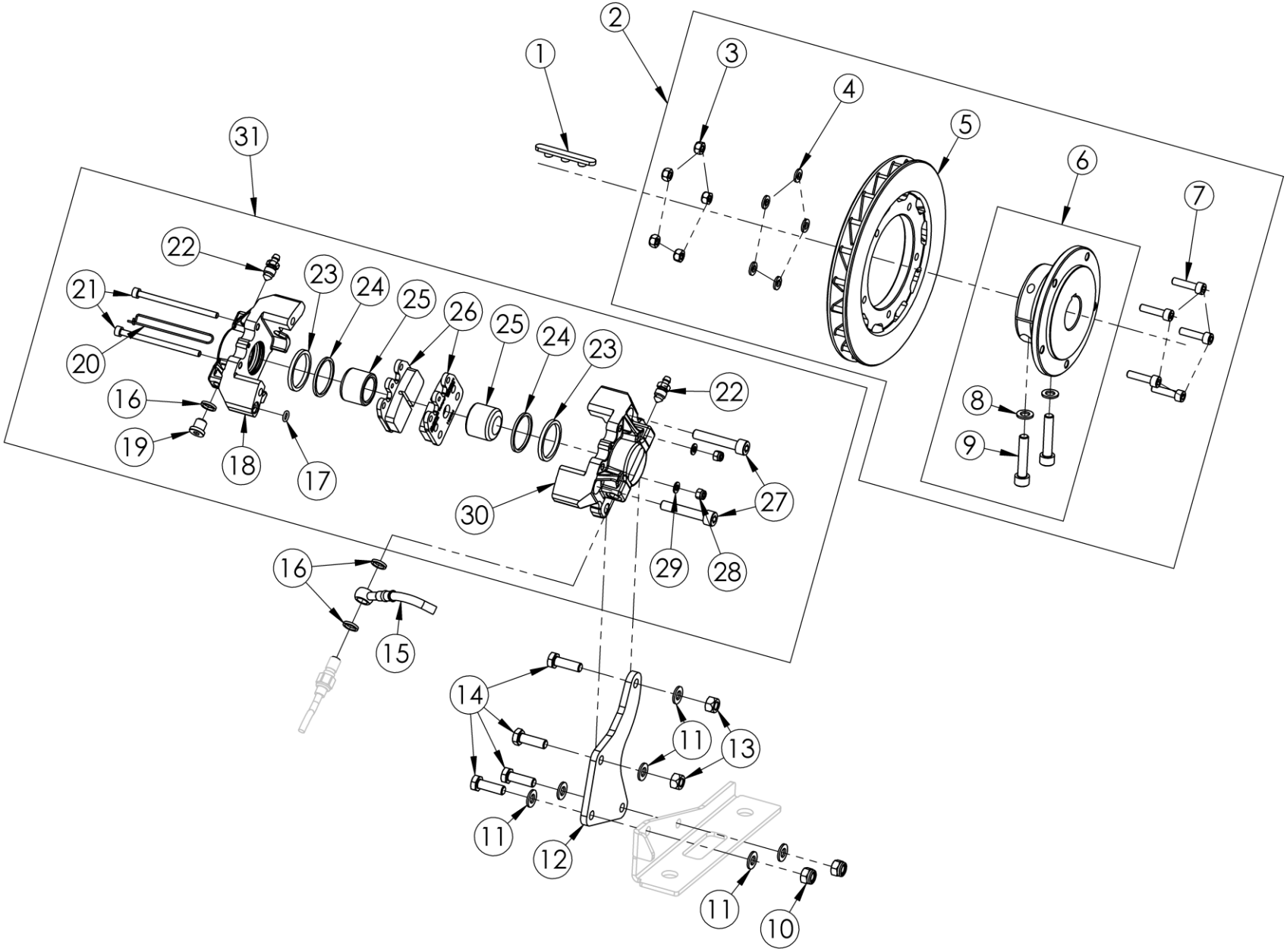

POS.	COD.	DESCRIZIONE	*DESCRIPTION*
1	AFS.0024701	CHIAVETTA ASSALE 3 PIOLI BRUNITA	REAR AXLE KEYWAY 3 PINS
2	NOL.02345	DISCO FRENO POSTERIORE CENT COMPLETO	*BRAKE DISC COMPLETE CENT*
3	AFN.00234	DADO M 6 METALBLOCK	*NUT M 6 METALBLOCK*
4	AFN.00105	RONDELLA 6,5-12X1,5	*WASHER 6,5-12X1,5*
5	SL2.02345	DISCO FRENO POSTERIORE CENT	*BRAKE DISC CTM*
6	FM0.02344	MOZZO DISCO POSTERIORE AL 30 CENT COMPLETO	*REAR BRAKE DISC HUB 30 COMPLETE CENT*
7	AFN.00478	VITE M 6X 25 CILINDRICA 5931	*M 6X25 SOCKET HEAD SCREW*
8	AFN.00287	RONDELLA 8,5-14X1,5	*WASHER 8,5-14X1,5*
9	AFN.03781	VITE M 8X 40 CILINDRICA 12.9 4762	*M 8X 40 SOCKET HEAD SCREW*
10	AFN.00128	DADO M 8 AUTOBLOCK ALTO	*NUT M8 HIGH SELF-LOCKING*
11	AFN.00350	RONDELLA 8,5-16X1,5	*WASHER 8,5-16X1,5*
12	SZ0.02102	PIASTRA SUPPORTO PINZA V05 Ø32 CENTURION	*REAR BRAKE CALIPER SUPPORT CENT*
13	AFN.00286	DADO M 8 METALBLOCK	*NUT M 8 METALBLOCK*
14	AFN.00107	VITE M 8X 25 ESAGONALE 5739	*M 8X25 HEXAGONAL HEAD SCREW*
15	AFS.03097	TUBO FRENO OCCHIELLO MM1570 ROSSO CENT/CENTMINI	*BRAKE TUBE EYELET MM1570*
16	AFN.00186	RONDELLA 10,5-14X2 RAME	*COPPER WASHER 10,5-14X2*
17	AFN.00182	OR PINZA 6 X 2 V11 POSTERIORE (IN MATERIALE EPDM)	*REAR O-RING CALIPER 6X2 V11*
18	SAN.1800S	SEMI PINZA POST.BK-11 30 SX NERA	*HALF REAR BRAKE CALIPER V11 30 LH WITH FITTINGS*
19	SBN.00369	TAPPO M10 V11	*CALIPER CAP M10 V11*
20	AFS.01682	SPINA SICUREZZA PINZA POST.V05/V08	*REAR SAFETY PIN*
21	AFN.01679	VITE M 5X 80 CILINDRICA 5931	*M 5X80 SOCKET HEAD SCREW*
22	SZ0.00184	SPURGO M10 V11	*BLEEDER M10 V11*
23	AFS.03022	GOMMINO PINZA POSTERIORE Ø30 V11	*REAR BRAKE CALIPER SEAL Ø30 V11*
24	AFS.03023	GOMMINO PARAPOLVERE Ø30 V09/V10	*DUST GUARD SEAL Ø30*
25	SD1.03475	PISTONCINO PINZA POST NOL Ø30	*BRAKE CALIPER PISTON Ø30 RENT*
26	AFS.01745	PASTIGLIA FRENO POST. V11 ROSSA	*REAR BRAKE PAD V11 RED*
27	TCI.05X045	VITE M 5X 45 CILINDRICA	*M 5X 45 SOCKET HEAD SCREW*
28	AFN.02176	DADO M 5 AUTOBLOCK ALTO	*M5 HIGH SELF-LOCKING NUT*
29	AFN.02264	RONDELLA 5,3-10X1	*WASHER 5,3-10X1*
30	SAN.1800D	SEMI PINZA POST.BK-11 30 DX NERA	*HALF REAR BRAKE CALIPER V11 30 RIGHT BLACK*
31	FM0.03621	PINZA POSTERIORE CRG RENT Ø30 COMPLETA	*REAR BRAKE CALIPER Ø30 COMPL. CENT*

ASSALE – REAR AXLE - **LEGACY**

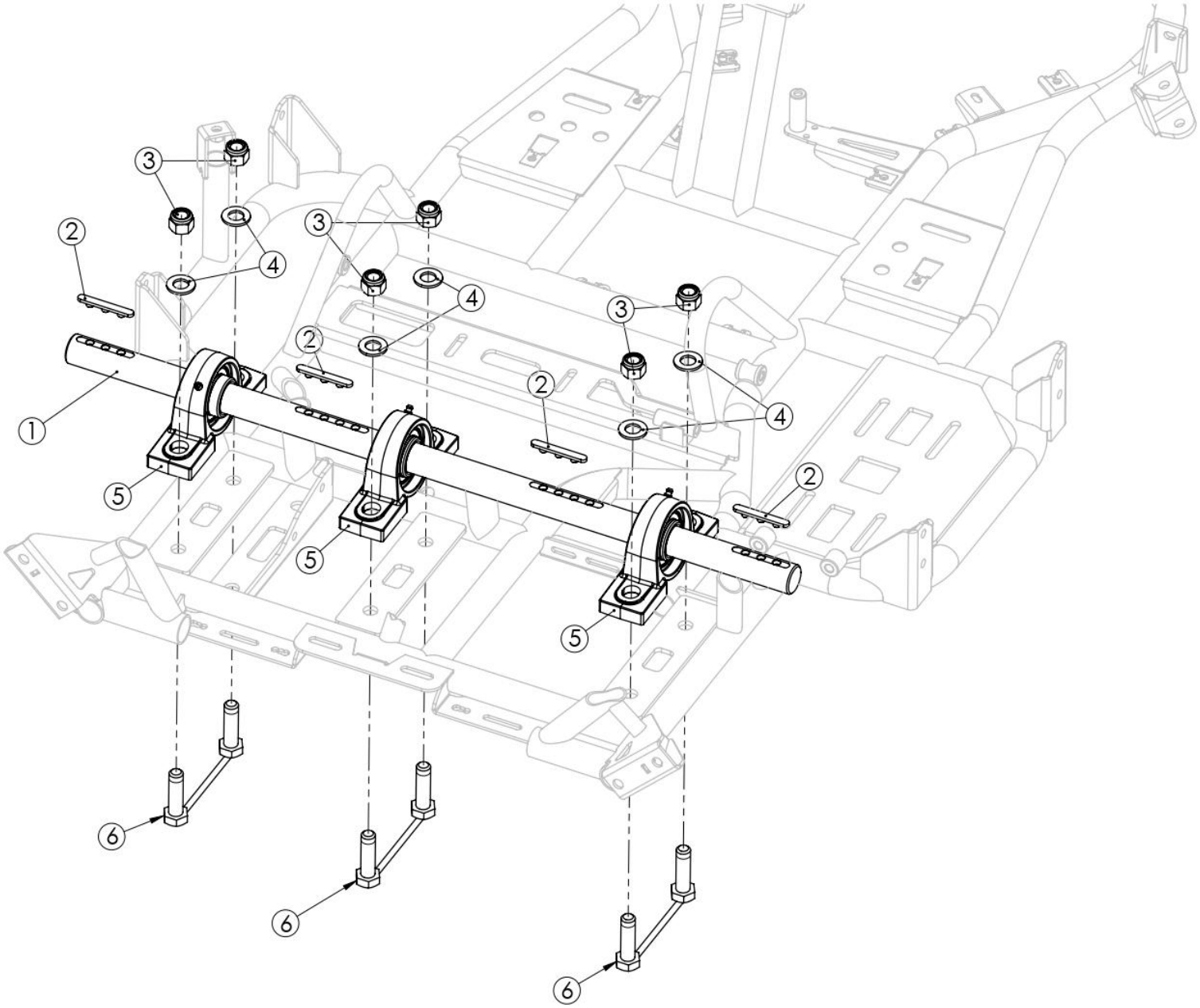

POS.	COD.	DESCRIZIONE	*DESCRIPTION*
1	FZ0.03089	ASSALE 30 BIANCO CENTURION MINI	BFMINI REAR AXLE 30 WHITE
2	AFS.0024701	CHIAVETTA ASSALE 3 PIOLI BRUNITA	*REAR AXLE KEYWAY 3 PINS*
3	AFN.00058	DADO M14X1,5 AUTOBLOCK BASSO	*NUT M14X1,5 SELF-LOCKING*
4	AFN.01564	RONDELLA 15X30X2,5	*WASHER 15-30X2,5*
5	AFS.02122	CUSCINETTO ASSALE 30 CENTURION GRANO M8	*REAR AXLE BEARING 30 CENT GRUB M8*
6	SZ0.02368	COPPIA VITI CUSC. ASSALE CENT 14X45	*AXLE BEARING COUPLE OF SCREWS CENT*

ASSALE 2.0 – REAR AXLE 2.0

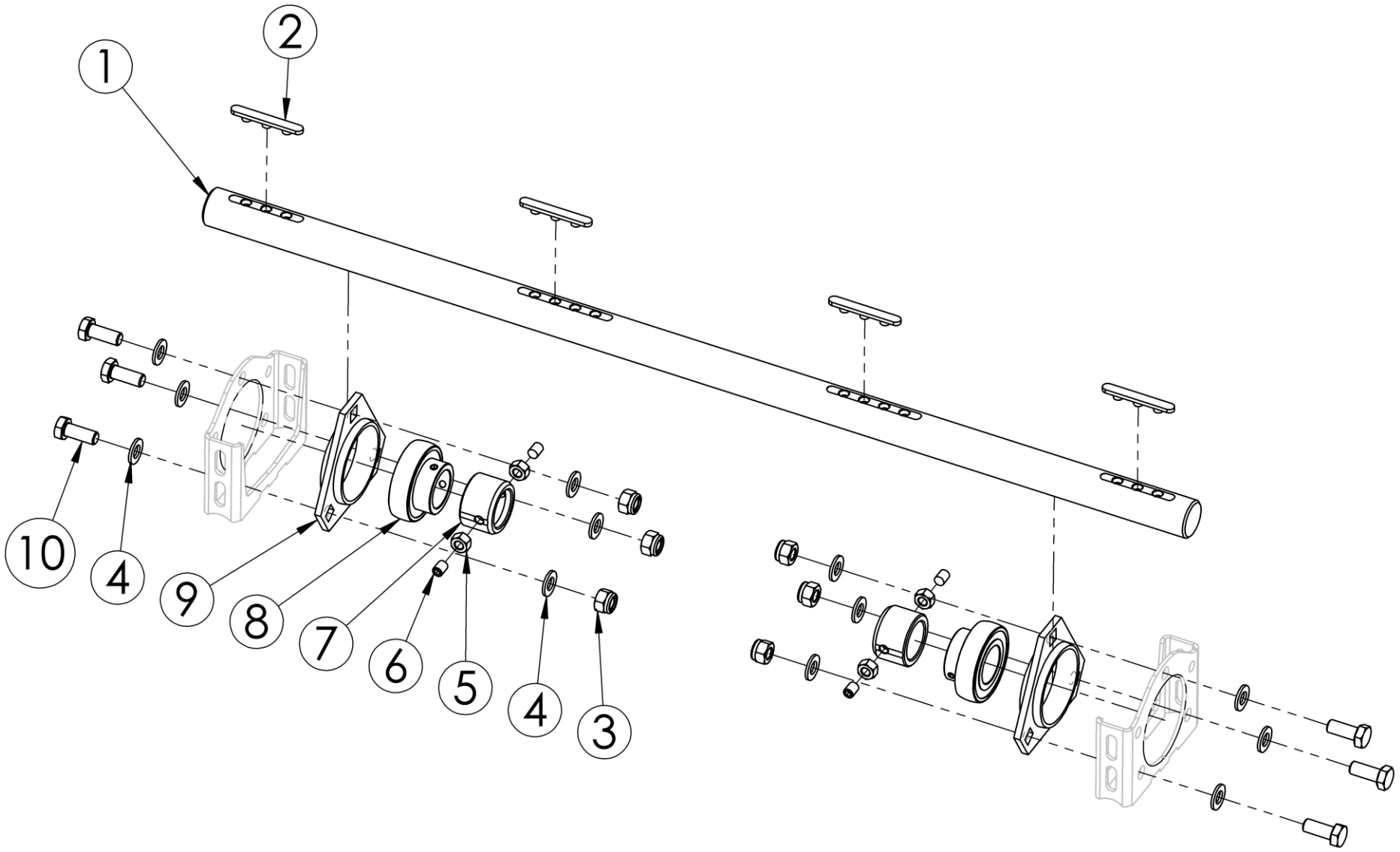

POS.	COD.	DESCRIZIONE	*DESCRIPTION*
1	FZ0.03089	ASSALE 30 BIANCO CENTURION MINI	BFMINI REAR AXLE 30 WHITE
2	AFS.0024701	CHIAVETTA ASSALE 3 PIOLI BRUNITA	*REAR AXLE KEYWAY 3 PINS*
3	AFN.02393	DADO M10 AUTOBLOCK ALTO	*NUT M10 HIGH SELF-LOCKING*
4	AFN.01637	RONDELLA 10,5-20X2	*WASHER 10,5-20X2*
5	AFN.0049D	DADO M 8 DX	*NUT M8*
6	AFN.05529	GRANO M 8X14 TESTA A PUNTA	*M8X14 GRUB SCREW*
7	SZ0.02519	BOCCOLA CENTURION FISSAGGIO ASSALE	*REAR AXLE CLAMP BUSHING CENT*
8	AFS.06695	CUSCINETTO ASSALE 30 CE UC206 GRANO M8	*AXLE BEARING 30 CE UC206 GRUB SCREW M8*
9	AFN.05680	COPPIA FLANGE X CUSCINETTO ASSALE 30 3F CE	*30 3F CE AXLE BEARING FLANGES PAIR*
10	AFN.02845	VITE M10X 25 ESAGONALE 5739	*M10X25 HEXAGONAL HEAD SCREW*

TENDICINGHIA – BELT TIGHTENER

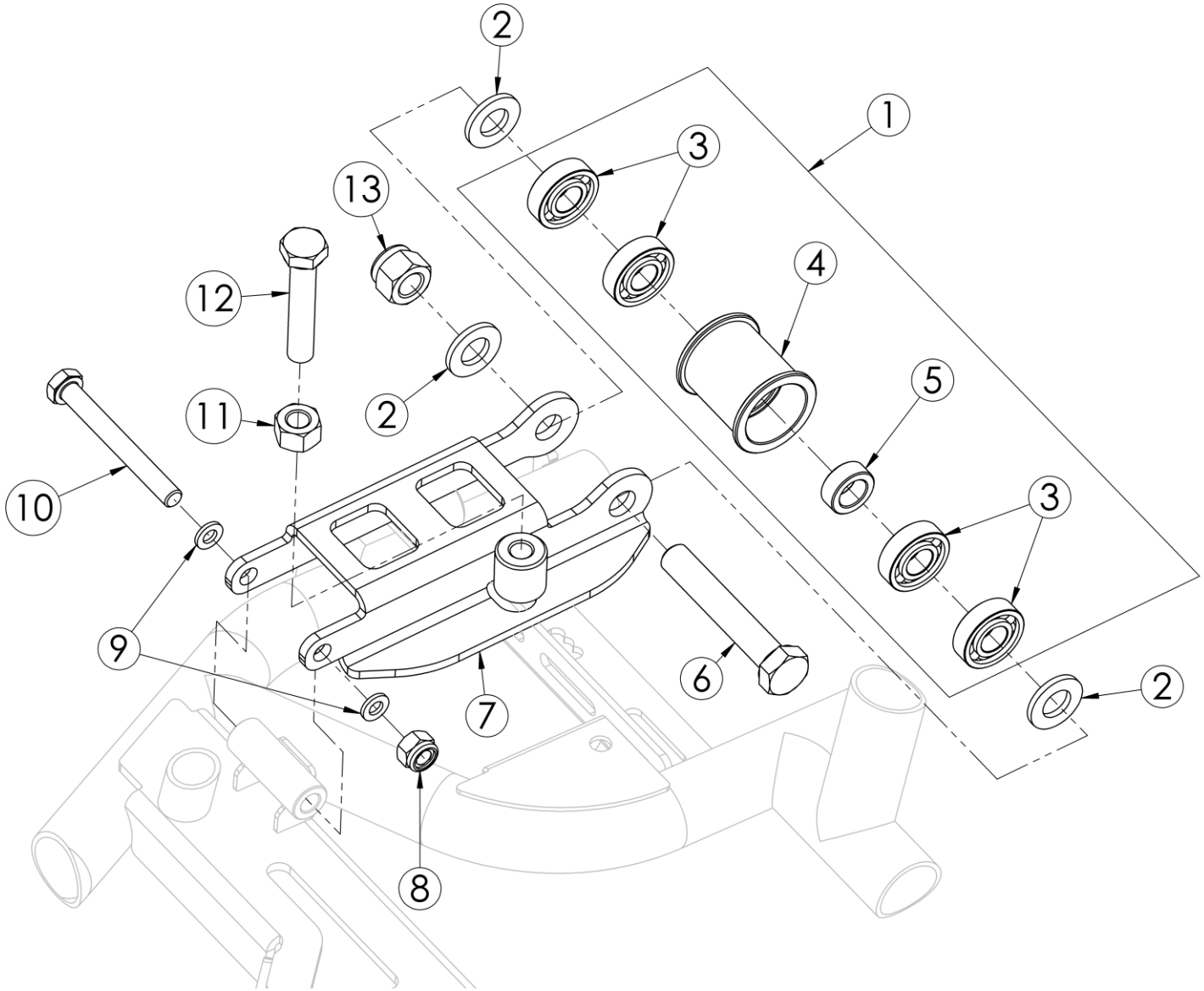

POS.	COD.	DESCRIZIONE	*DESCRIPTION*
1	FM0.03265	RULLO TENDICINGHIA CENT 2014 COMP	BELT TIGHTENER ROLLER ASSY CENTURION
2	AFN.03560	RONDELLA 12 -20X2 ZINCATA	*WASHER 12 -20X2*
3	AFS.03338.2RS	CUSCINETTO 6001 Ø12 2RS	*BEARING 6001 STUB AXLE BOLT 2RS*
4	SZ0.03265	RULLO TENDICINGHIA 40MM CENT	*TURNBUCKLE ROLLER 40MM CENT*
5	SZ0.03962	DISTANZIALE CUSCINETTO RULLO TENDICINGHIA CENT	*CENT BELT-TENER BEARING SPACER*
6	AFN.04200	VITE M12X 70 ESAGONALE 5739 ZINCATA	*M12X70 HEXAGONAL HEAD SCREW*
7	SZ0.03077	TENDICINGHIA C/ESAGONO CENTURIONMINI	*TIGHTENER FOR BELT W/EXAG. CTM*
8	AFN.00128	DADO M 8 AUTOBLOCK ALTO	*NUT M8 HIGH SELF-LOCKING*
9	AFN.00350	RONDELLA 8,5-16X1,5	*WASHER 8,5-16X1,5*
10	AFN.00914	VITE M 8X 70 ESAGONALE 5739 TUTTO FILETTO	*M 8X70 HEXAGONAL HEAD SCREW*
11	AFN.00255	DADO M10	*NUT M10*
12	AFN.00982	VITE M10X 55 ESAGONALE 5739	*M10X 55 HEXAGONAL HEAD SCREW*
13	AFN.02364	DADO M12 AUTOBLOCK ALTO	*M12 HIGH SELF-LOCKING NUT*

MONTAGGIO MOTORE – ENGINE FITTING

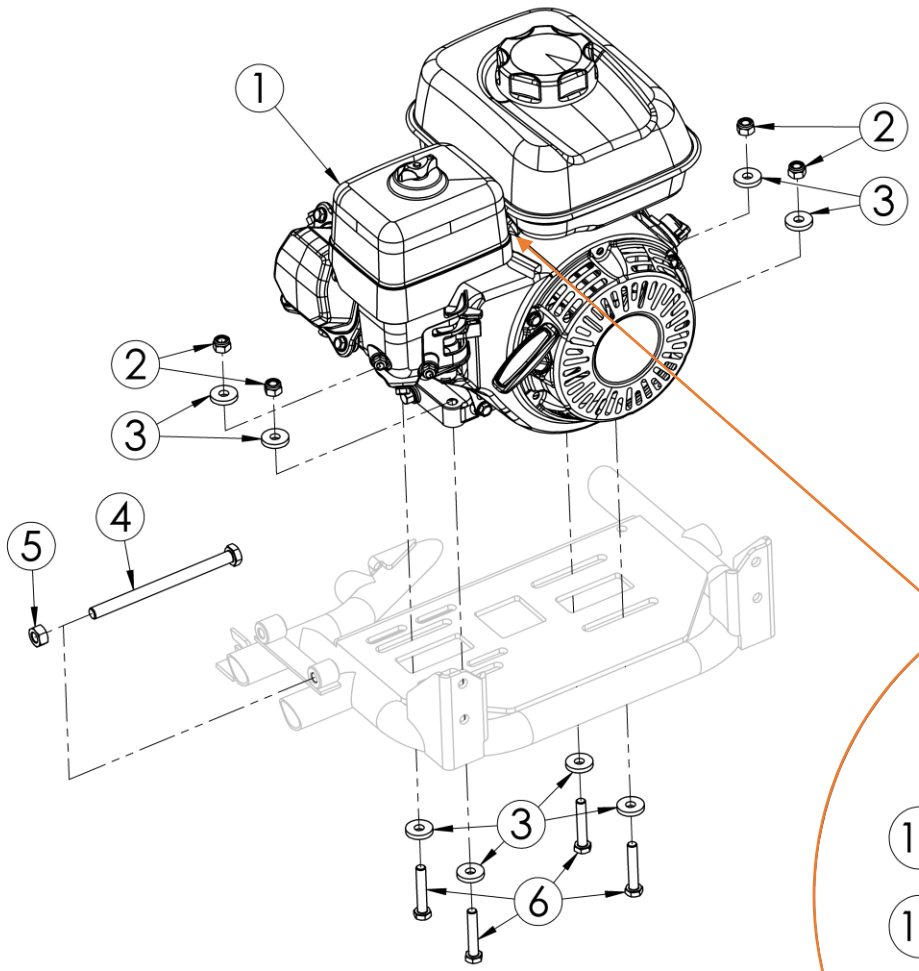

VECCHIA VERSIONE – OLD VERSION

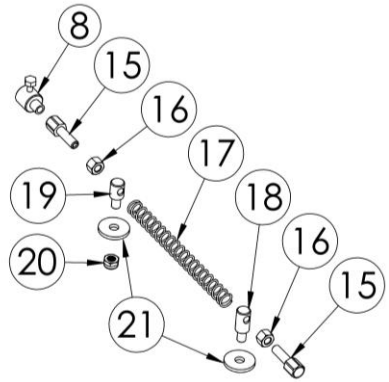

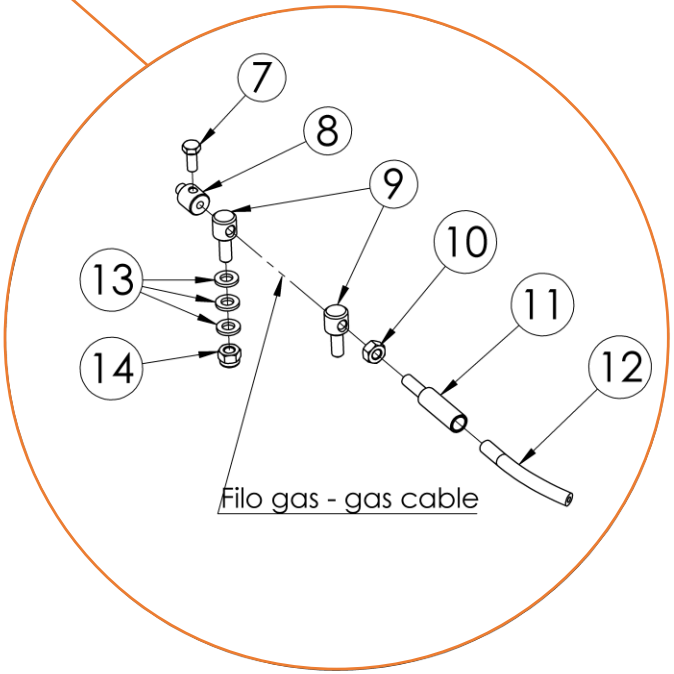

POS.	COD.	DESCRIZIONE	*DESCRIPTION*
1	AFS.01296	MOTORE HONDA GX120 RH-QE-OH	HONDA ENGINE GX120
2	AFN.00128	DADO M 8 AUTOBLOCK ALTO	*NUT M8 HIGH SELF-LOCKING*
3	AFN.00277	RONDELLA 8,4-23X4	*WASHER 8,4-23X4*
4	AFN.02820	VITE M10X140 ESAG.(TENDICATENA MINI) 5739	*M10X140 HEXAGONAL HEAD SCREW*
5	AFN.00255	DADO M10	*NUT M10*
6	AFN.00911	VITE M 8X 45 ESAGONALE 5739	*M 8X45 HEXAGONAL HEAD SCREW*
7	CE00107	VITE M 5X 12 ESAGONALE 5739	*M5X12 HEX SCREW*
8	AFS.00514	MORSETTO FILO RR	*CABLE CLAMP*
9	SBN.02396	PERNO FERMAFILO CENT	*CABLE ADJUSTER PIVOT BLACK*
10	AFN.00093	DADO M 6	*NUT M 6*
11	SZ0.00390	REGISTRO FILO M6 CENT	*CABLE ADJUSTER M6 CENTBI*
12	AMS.00591	GUAINA FILO D7 GAS	*OUTER CABLE Ø7 FOR GAS*
13	AFN.00105	RONDELLA 6,5-12X1,5	*WASHER 6,5-12X1,5*
14	AFN.00264	DADO M 6 AUTOBLOCK ALTO	*NUT M6 HIGH SELF-LOCKING*
15	AFS.00588	REGISTRO FILO PINZA MECCANICA	MECHANICAL BRAKE CALIPER REGISTER
16	AFN.3562D	DADO M 5 DX	*NUT M 5*
17	SZ0.02201	MOLLA RITORNO CARBURATORE CENT	*CARBURETTOR RECOVERY SPRING CENT*
18	SZ0.00523	PERNO REGISTRO FERMAFILO CENTMINI ALTO	*CABLE ADJUSTABLE PIVOT CENTMINI HIGH*
19	AFN.00582	PERNO REGISTRO FERMAFILO CENTMINI BASSO	*CABLE ADJUSTABLE PIVOT CENTMINI LOW*
20	Afn.00360	DADO M 5 AUTOBLOCK BASSO	*NUT M 5 LOW SELF-LOCKING*
21	AFN.00361	RONDELLA 5,5-15X1,5	*WASHER 5,5-15X1,5*

TRASMISSIONE CINGHIA – BELT TRANSMISSION

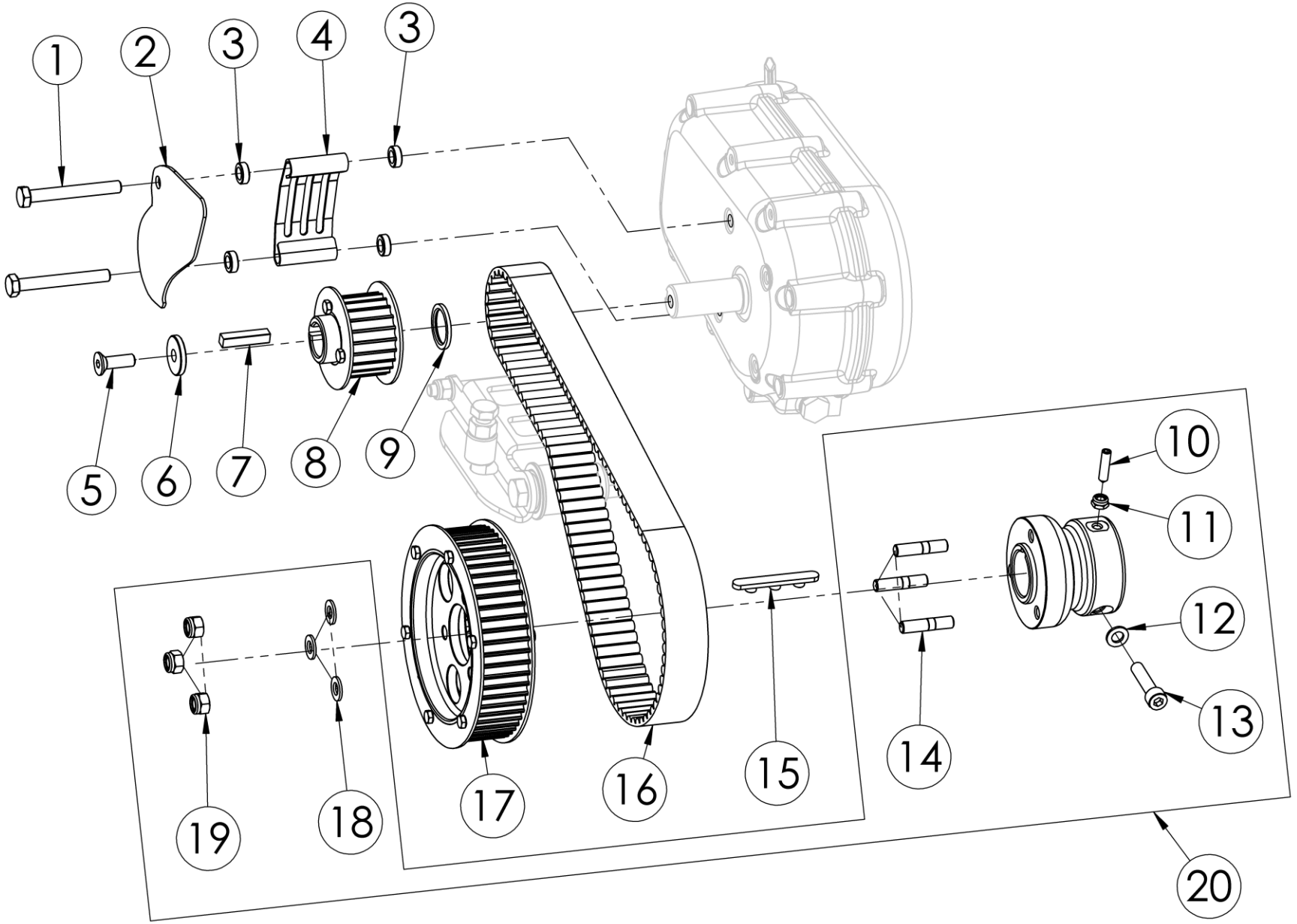

POS.	COD.	DESCRIZIONE	*DESCRIPTION*
1	AFN.03812	VITE M 8X 65 ESAGONALE 5739	M 8X 65 HEXAGONAL HEAD SCREW
2	SZ0.03435	PROTEZIONE PULEGGIA CENT (IMBUTITA)	*FRONT SPROCKET PROTECTION COVER*
3	FBN.00252	SPESSORE 8,5-14X 5 BARRETTA	*ROD SPACER 8,5-14X5 TRACK ROD*
4	SZ0.03634	PROTEZIONE FRONTALE PULEGGIA CENT	*GX390 REAR SPROCKET PROTECTION COVER*
5	AFN.00145	VITE M 8X 25 SVASATA 5933	*M8X25 COUNTERSUNK HEAD SCREW*
6	SZ0.02365	RONDELLA PIGNONE X GX270 CENTURION	*SPROCKET WASHER FOR GX270 CENTURION*
7	SL1.02550	CHIAVETTA 7X7X33 CENTURION	*KEY 7X7X33 CENT*
8	FM0.03491	PULEGGIA MOTORE 30MM Z22 8M ALL C/VITI	*30MM Z22 8M ALUM ENGINE PULLEY WITH SCREWS*
9	SZ0.02366	SPESSORE PULEGGIA MOTORE CENTURION	*ENGINE PULLEY SPACER CENT*
10	AFN.04792	GRANO M 6X25 TESTA A PUNTA	*GRUB SCREW M6X25*
11	AFN.00106	DADO M 6 AUTOBLOCK BASSO	*NUT M6 LOW SELF-LOCKING*
12	AFN.00287	RONDELLA 8,5-14X1,5	*WASHER 8,5-14X1,5*
13	AFN.02153	VITE M 8X 35 CILINDRICA 5931	*M 8X35 SOCKET HEAD SCREW*
14	AFS.00126	PRIGIONIERO M 8	*STUD M8*
15	AFS.0024701	CHIAVETTA ASSALE 3 PIOLI BRUNITA	*REAR AXLE KEYWAY 3 PINS*
16	AFS.03125	CINGHIA 880 8M 30 CENTMINI	*BELT 880 8M 30 CENTMINI*
17	FM0.03407	PULEGGIA ASSALE 30MM Z56 8M ALL C/VITI	*AXLE PULLEY ALUMINIUM 30MM T56 8M*
18	AFN.00350	RONDELLA 8,5-16X1,5	*WASHER 8,5-16X1,5*
19	AFN.00128	DADO M 8 AUTOBLOCK ALTO	*NUT M8 HIGH SELF-LOCKING*
20	FM0.01845	MOZZO POSTERIORE 30X 60 CENTURION	*REAR HUB 30X 60 COMPLETE*

SILENZIATORE – SILENCER - **LEGACY**

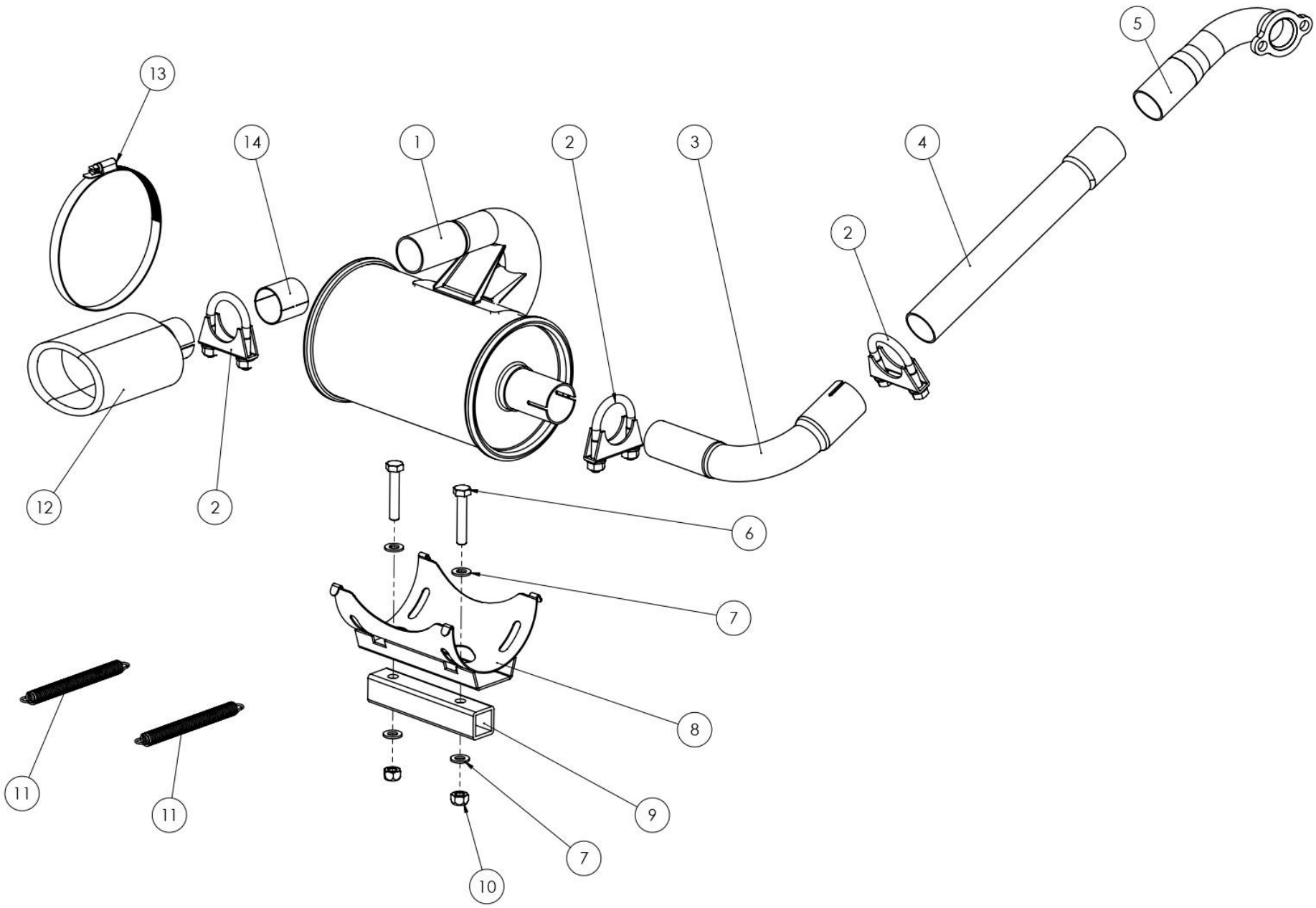

POS.	COD.	DESCRIZIONE	*DESCRIPTION*
1	AFS.06258	SILENZIATORE CENT RACING XS EXTRA SILENCER	CENTURION RACING SILENCER 2.0
2	AFS.03215	FASCETTA SILENZIATORE CENT DIAM.35	*CENT SILENCER BAND DIAM.35*
3	AFS.04087	CURVA GIUNZIONE SILENZIATORE XS + MINI INOX	*CENT EXHAUST MANIFOLD JUNCTION PIPE*
4	AFS.03211	TUBO GIUNZIONE COLLETTORE/CURVA RACING	*CENT RACING JUNCTION PIPE FOR MANIFOLD*
5	AFS.03685	COLLETTORE USCITA MOTORE CENTMINI Ø32	*CENTMINI ENGINE OUTPUT MANIFOLD Ø32*
6	AFN.00911	VITE M 8X 45 ESAGONALE 5739	*M 8X45 HEXAGONAL HEAD SCREW*
7	AFN.00350	RONDELLA 8,5-16X1,5	*WASHER 8,5-16X1,5*
8	SZ0.06431	CULLA MARMITTA CENT Ø125	*EXHAUST SUPPORT CENT Ø125*
~~9~~	~~SZ0.03273~~	~~SPESSORE SUPPORTO CULLA MARMITTA 25X25~~	~~*EXHAUST CRADLE SUPPORT SPACER 25X25*~~
10	AFN.00286	DADO M 8 METALBLOCK	*NUT M 8 METALBLOCK*
11	SZ0.00122	MOLLA CULLA MARMITTA 10,5 STD	*EXHAUST CRADLE SPRING 10,5 STD*
12	AFS.03214	TERMINALE OVALE CENT RACING	*CENT RACING TERMINAL OVAL*
13	AFS.03272	FASCETTA SILENZIATORE 120-140 H.12 MM CENT	*TUBE BAND 120-140-10 CENT*
14	SZ0.04181	ADATTATORE TERMINALE OVALE PER CENTMINI	*OVAL END ADAPTER FOR CENTIMINI*

SILENZIATORE - SILENCER

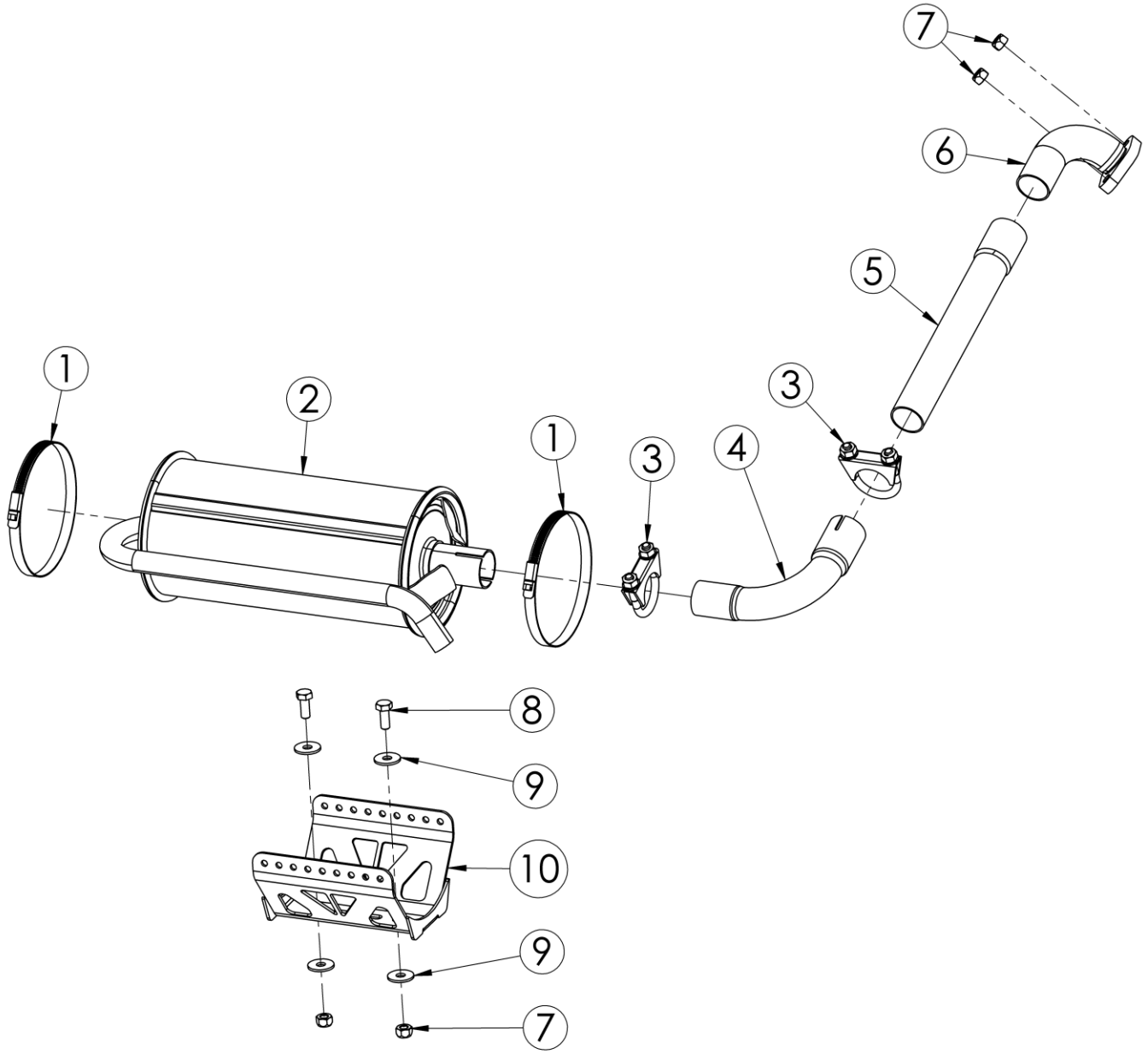

POS.	COD.	DESCRIZIONE	*DESCRIPTION*
1	AFS.03272	FASCETTA SILENZIATORE 120-140 H.12 MM CENT	TUBE BAND 120-140-10 CENT
2	AFS.06258	SILENZIATORE CENT RACING XS EXTRA SILENCER	*CENTURION RACING SILENCER 2.0*
3	AFS.03215	FASCETTA SILENZIATORE CENT DIAM.35	*CENT SILENCER BAND DIAM.35*
4	AFS.04087	CURVA GIUNZIONE SILENZIATORE XS + MINI INOX	*CENT EXHAUST MANIFOLD JUNCTION PIPE*
5	AFS.03211	TUBO GIUNZIONE COLLETTORE/CURVA RACING	*CENT RACING JUNCTION PIPE FOR MANIFOLD*
6	AFS.03210	COLLETTORE USCITA MOTORE CENT RACING	*CENT RACING SILENCER MANIFOLD*
7	AFN.00286	DADO M 8 METALBLOCK	*NUT M 8 METALBLOCK*
8	AFN.00909	VITE M 8X 20 ESAGONALE	*M8X20 HEXAGONAL HEAD SCREW*
9	AFN.02415	RONDELLA 8,5-24X2	*8,5-24X2 WASHER*
10	SZ0.06431	CULLA MARMITTA CENT Ø125	*EXHAUST SUPPORT CENT Ø125*

BATTERIA E CABLAGGIO LUCI STOP – BATTERY AND REAR STOP LIGHT WIRING

Cablaggio per singola luce stop su rollbar
Wiring for single stop light on rollbar

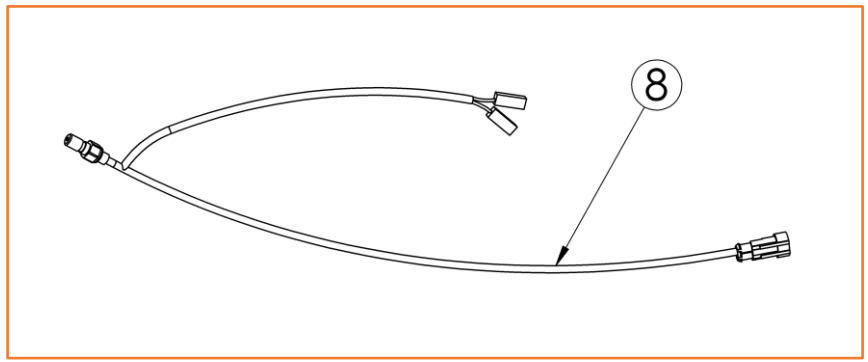

Cablaggi per due luci stop su carena posteriore
Wiring for two stop lights on rear fairing

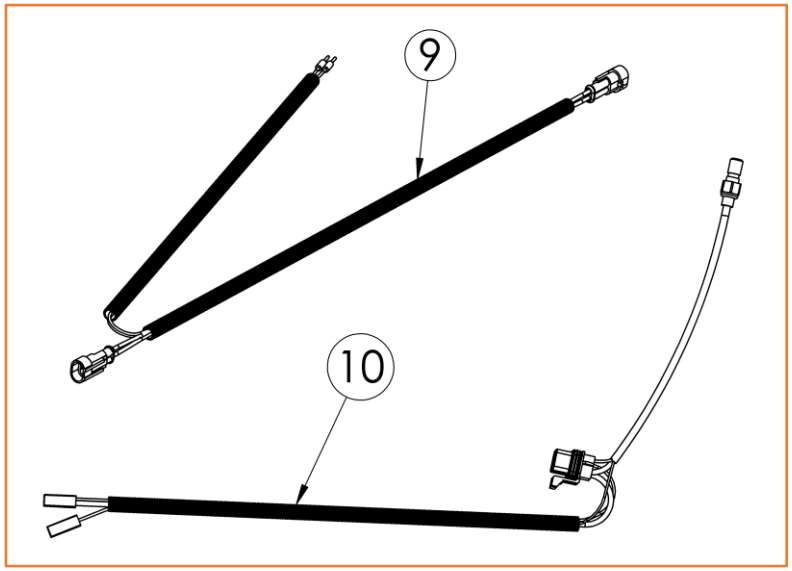

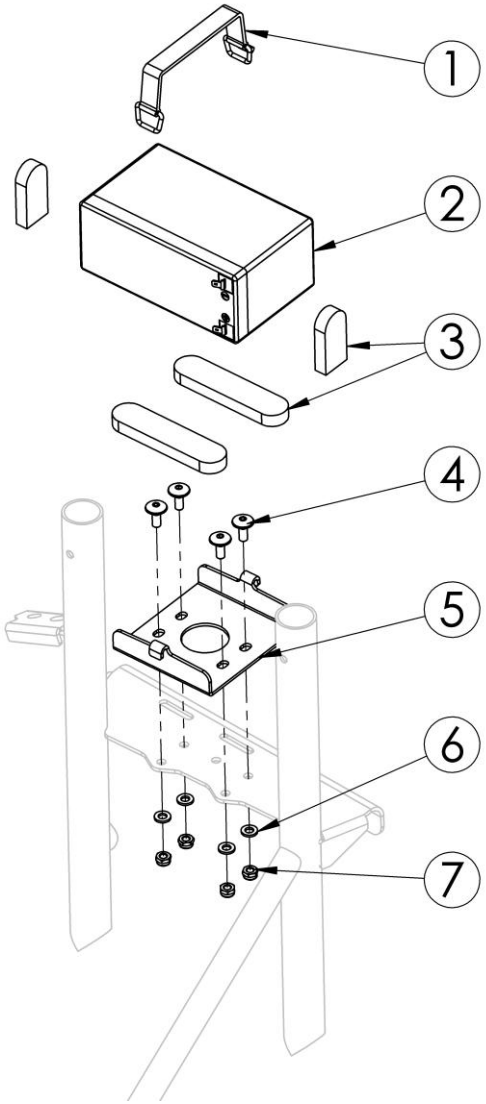

BATTERIA E CABLAGGIO LUCI STOP – BATTERY AND REAR STOP LIGHT WIRING

POS.	COD.	DESCRIZIONE	*DESCRIPTION*
1	AFS.03096	CINGHIA ELASTICA CIN-140 CENTURIONMINI (BATTERIA)	BELT CIN-140 CENTURIONMINI
2	AFS.02360	BATTERIA CENT 12V-7,2 AH	*STOP BATTERY V.12 A.7,2 CENT*
3		SPUGNA	*SPONGE*
4	AFN.00261	VITE M 6X 20 SVASATA 5933	*M6X20 COUNTERSUNK HEAD SCREW*
5	SZ0.03095	SUPPORTO BATTERIA CENTURIONMINI	*BATTERY SUPPORT CENTURIONMINI*
6	AFN.00105	RONDELLA 6,5-12X1,5	*WASHER 6,5-12X1,5*
7	AFN.00106	DADO M 6 AUTOBLOCK BASSO	*NUT M6 LOW SELF-LOCKING*
8	FM0.01137	CABLAGGIO COMPLETO LUCI STOP CENTBI SENZA INTERR.	*CABEL SYS.COMPLETE STOP LIGHT CENTBI*
9	FL1.04001	CABLAGGIO LUCI STOP CENT MOD. CON INTERRUTTORE	*CABEL SYSTEM STOP LIGHT CENT FOR SYSTEM WITH SWITCH*
10	AFS.02302	RACCORDO IDRO STOP CENTURION	IDRO STOP FITTING CENT

PROTEZIONE E PARAURTI ANTERIORE – FRONT BUFFER AND FRONT BUMPER

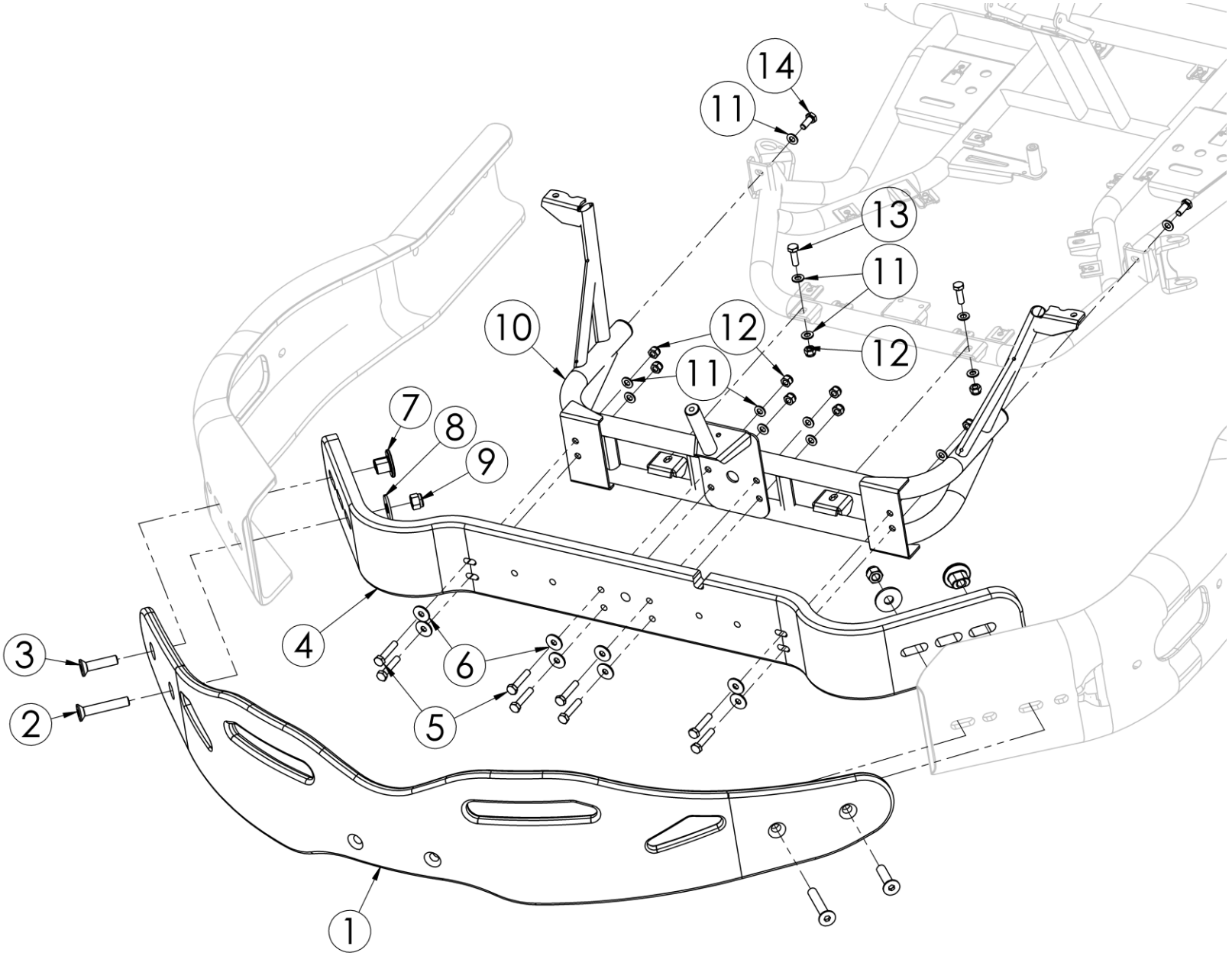

PROTEZIONE E PARAURTI ANTERIORE – FRONT BUFFER AND FRONT BUMPER

POS.	COD.	DESCRIZIONE	*DESCRIPTION*
1	AFS.04911	FASCIA PARAURTI ANTERIORE CENT CON PROTEZ. PEDALI	CENTURION FRONT BUFFER BAND WITH SIDE PROTECTION
2	AFN.02332	VITE M12X 70 SVASATA 5933	*M12X 70 COUNTERSUNK HEAD SCREW*
3	AFN.02294	VITE M12X 50 SVASATA 5933	*M12X50 COUNTERSUNK HEAD SCREW*
4	AFS.0216109	BALESTRA ANTERIORE CENTRALE CENTURION	*FRONT-CENTRAL LEAF SPRING CENT*
5	AFN.00910	VITE M 8X 40 ESAGONALE 5739	*M 8X40 HEXAGONAL HEAD SCREW*
6	AFN.02415	RONDELLA 8,5-24X2	*8,5-24X2 WASHER*
7	SZ0.00701	DADO M12 OVALE 14X25	*SPECIAL NUT M12 14X25*
8	AFN.02416	RONDELLA 12 -36X3	*12-36X3 WASHER*
9	AFN.02364	DADO M12 AUTOBLOCK ALTO	*M12 HIGH SELF-LOCKING NUT*
10	SZE.03070	PARAURTI ANTERIORE CENTURIONMINI	*FRONT BUMPER CTM*
11	AFN.00350	RONDELLA 8,5-16X1,5	*WASHER 8,5-16X1,5*
12	AFN.00128	DADO M 8 AUTOBLOCK ALTO	*NUT M8 HIGH SELF-LOCKING*
13	AFN.00107	VITE M 8X 25 ESAGONALE 5739	*M 8X25 HEXAGONAL HEAD SCREW*
14	AFN.00909	VITE M 8X 20 ESAGONALE	*M8X20 HEXAGONAL HEAD SCREW*

PROTEZIONE LATERALI – SIDE BUFFERS

DX - RH

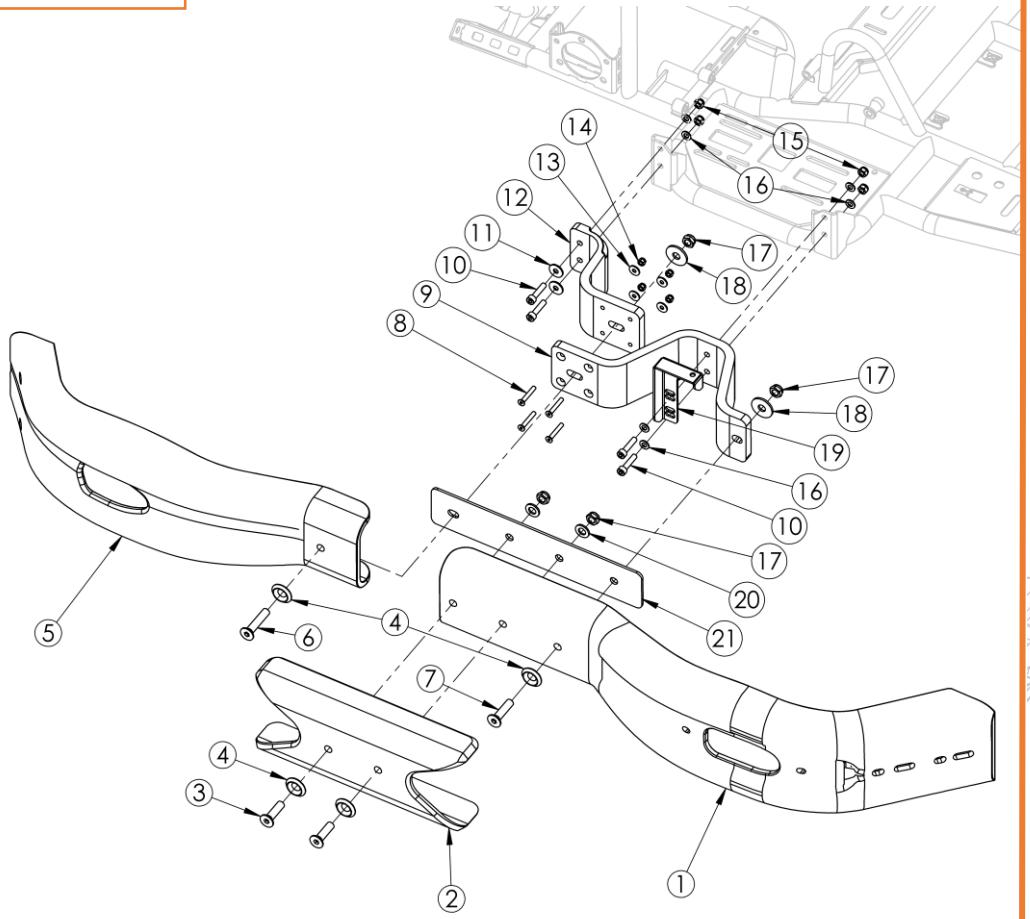

SX - LH

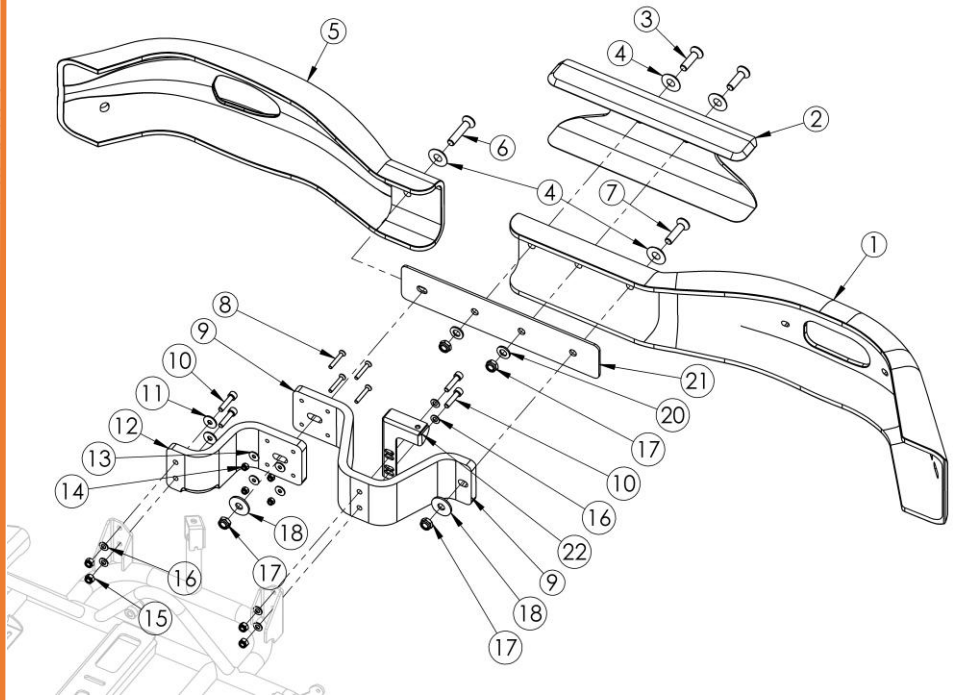

I lati sinistro e destro sono uguali, fatta eccezione per Nr. 19 e 22
Both left and right sides are the same, except for Nos. 19 and 22

POS.	COD.	DESCRIZIONE	*DESCRIPTION*
1	AFS.02723	FASCIA PARACOLPI ANT. LAT. CENTBI - CENTMINI	FRONT SIDE LEAF BAND CENTBI
2	AFS.03043	COPERTURA LATERALE PARAURTI CENTMINI	*SIDE BUMPER COVER CTM*
3	AFN.03561	VITE M12X 45 SVASATA 5933	*M12X 45 COUNTERSUNK HEAD SCREW*
4	SZ0.02367	RONDELLA 12 SVASATA BULLONE CENT	*CENTURION COUNTERSUNK BOLT M12 WASHER*
5	AFS.03063	FASCIA PARACOLPI POST.LATERALE CENTMINI	*REAR-SIDE BUFFER BAND CTM*
6	AFN.00676	VITE M12X 60 SVASATA 5933	*M12X60 COUNTERSUNK HEAD SCREW*
7	AFN.02294	VITE M12X 50 SVASATA 5933	*M12X50 COUNTERSUNK HEAD SCREW*
8	TSV.06X040	VITE M 6X 40 SVASATA 5933	*M 6X 40 COUNTERSUNK HEAD SCREW*
9	AFS.03042	BALESTRA LATERALE CENTURIONMINI	*SIDE LEAF SPRING CTM*
10	AFN.02153	VITE M 8X 35 CILINDRICA 5931	M 8X35 SOCKET HEAD SCREW
11	AFN.02415	RONDELLA 8,5-24X2	*8,5-24X2 WASHER*
12	AFS.03064	BALESTRA LATERALE CORTA CENTURIONMINI	*SHORT SIDE LEAF-SPRING CTM*
13	AFN.00263	RONDELLA 6,5-18X1,6	*WASHER 6,5-18X1,6*
14	AFN.00264	DADO M 6 AUTOBLOCK ALTO	*NUT M6 HIGH SELF-LOCKING*
15	AFN.00128	DADO M 8 AUTOBLOCK ALTO	*NUT M8 HIGH SELF-LOCKING*
16	AFN.00350	RONDELLA 8,5-16X1,5	*WASHER 8,5-16X1,5*
17	AFN.02394	DADO M12 AUTOBLOCK BASSO	*M12 LOW SELF-LOCKING NUT*
18	AFN.02416	RONDELLA 12 -36X3	*12-36X3 WASHER*
19	SZ0.3072D	STAFFA SOSTEGNO CARENA LAT.DX CENTMINI	*SIDE BUMBER REINFORCE PLATE RH CTM*
20	AFN.03560	RONDELLA 12 -20X2 ZINCATA	*WASHER 12 -20X2*
21	SZ0.03228	PIASTRA GIUNZIONE PARACOLPI CENTMINI	*CENTMINI JUNKTION PLATE FOR BUMPER*
22	SZ0.3072S	STAFFA SOSTEGNO CARENA LAT.SX CENTMINI	*SIDE BUMBER REINFORCE PLATE LF CTM*

PROTEZIONE POSTERIORE E PARADISCO – REAR BUFFER AND DISC BUFFER

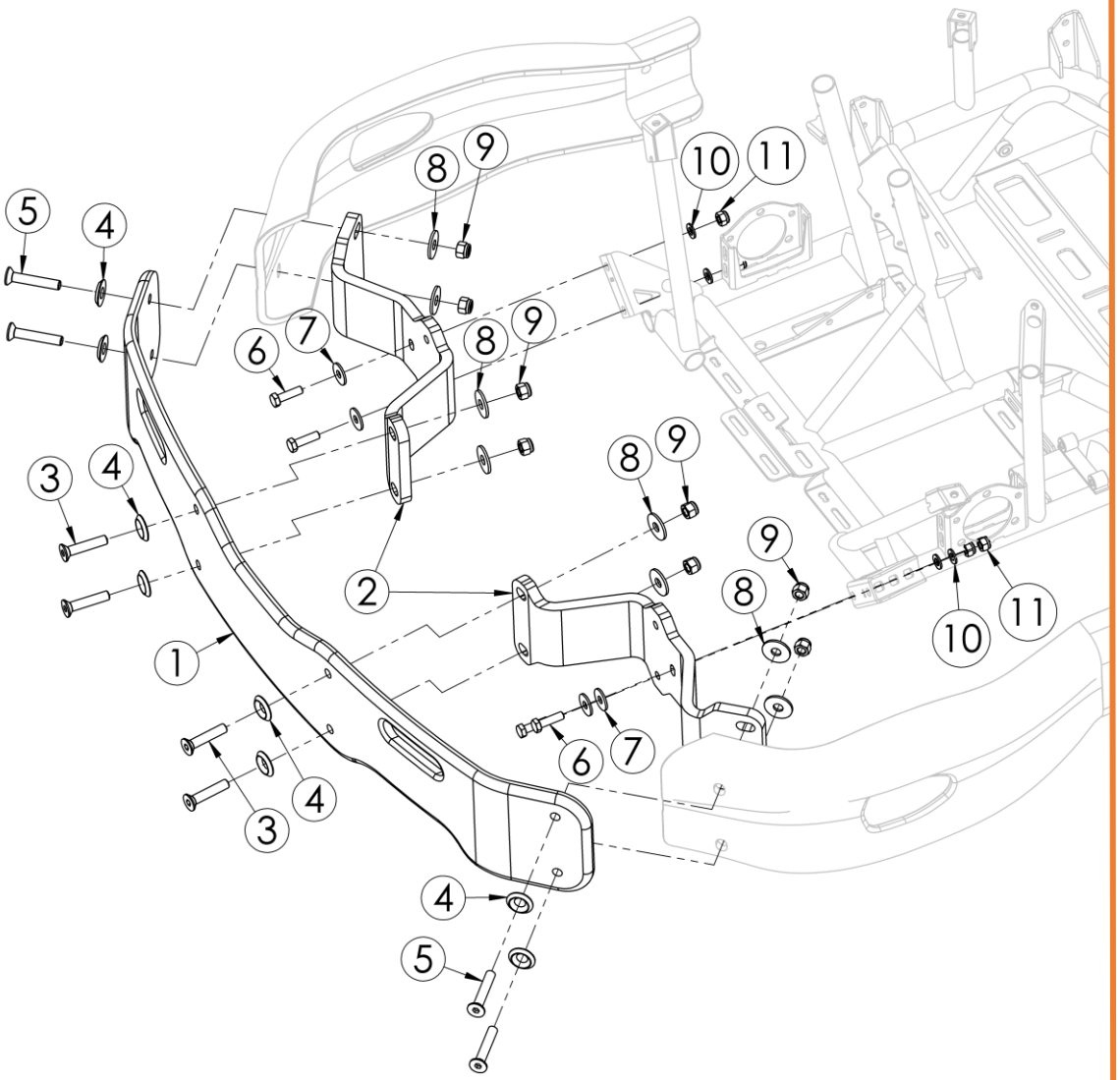

VERIFICA IL MODELLO DEL PARADISCHI PRIMA DI ORDINARE
VERIFY THE DISC BUFFER MODEL BEFORE ORDERING

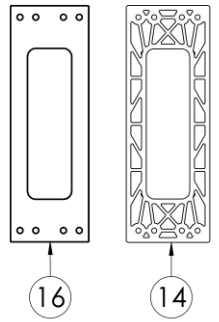

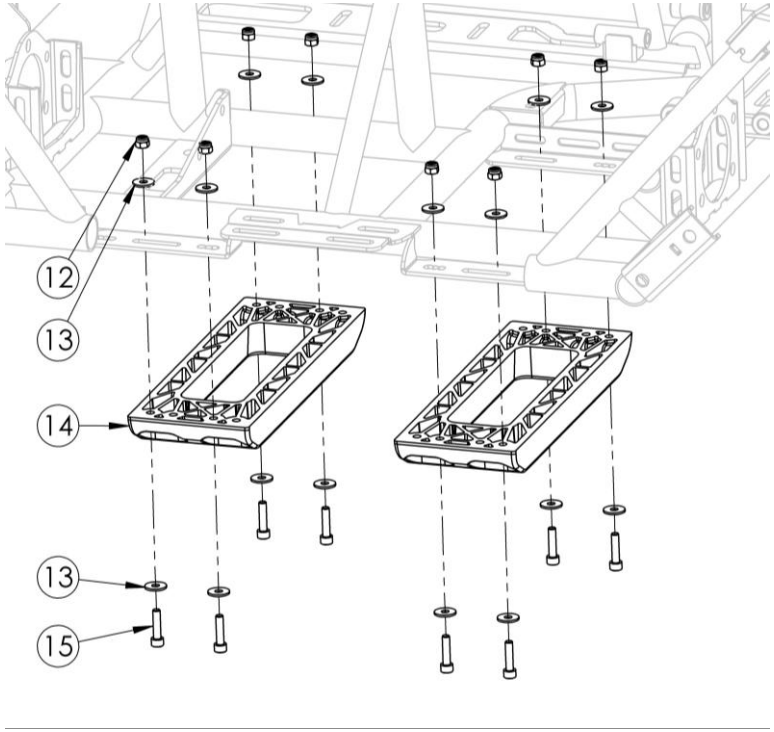

PROTEZIONE POSTERIORE E PARADISCO – REAR BUFFER AND DISC BUFFER

POS.	COD.	DESCRIZIONE	*DESCRIPTION*
1	AFS.03040	FASCIA PARACOLPI POSTERIORE CENTMINI	REAR BUFFER BAND CTM
2	AFS.03041	BALESTRA POSTERIORE CENTURIONMINI	*REAR LEAF SPRING CTM*
3	AFN.00676	VITE M12X 60 SVASATA 5933	*M12X60 COUNTERSUNK HEAD SCREW*
4	SZ0.02367	RONDELLA 12 SVASATA BULLONE CENT	*CENTURION COUNTERSUNK BOLT M12 WASHER*
5	AFN.02332	VITE M12X 70 SVASATA 5933	*M12X 70 COUNTERSUNK HEAD SCREW*
6	TES.10X035	VITE M10X 35 ESAGONALE 5739	*M10X35 HEXAGONAL HEAD SCREW*
7	AFN.00125	RONDELLA 10,5-30X2,5	*WASHER 10,5-30X2,5*
8	AFN.02416	RONDELLA 12 -36X3	*12-36X3 WASHER*
9	AFN.02364	DADO M12 AUTOBLOCK ALTO	*M12 HIGH SELF-LOCKING NUT*
10	AFN.01637	RONDELLA 10,5-20X2	*WASHER 10,5-20X2*
11	AFN.02393	DADO M10 AUTOBLOCK ALTO	*NUT M10 HIGH SELF-LOCKING*
12	AFN.00264	DADO M 6 AUTOBLOCK ALTO	*NUT M6 HIGH SELF-LOCKING*
13	AFN.00263	RONDELLA 6,5-18X1,6	*WASHER 6,5-18X1,6*
14	AFS.03419	PARADISCO PARAPULEGGIA CENT STAMPATO	*CENTURION DISC AND PULLEY PLATE*
15	AFN.00478	VITE M 6X 25 CILINDRICA 5931	*M 6X25 SOCKET HEAD SCREW*
16	SL1.02127	PARADISCO PARAPULEGGIA CENT	DISC-PLATE AND PULLEY-PLATE CENT

PIANALE – FLOOR TRAY

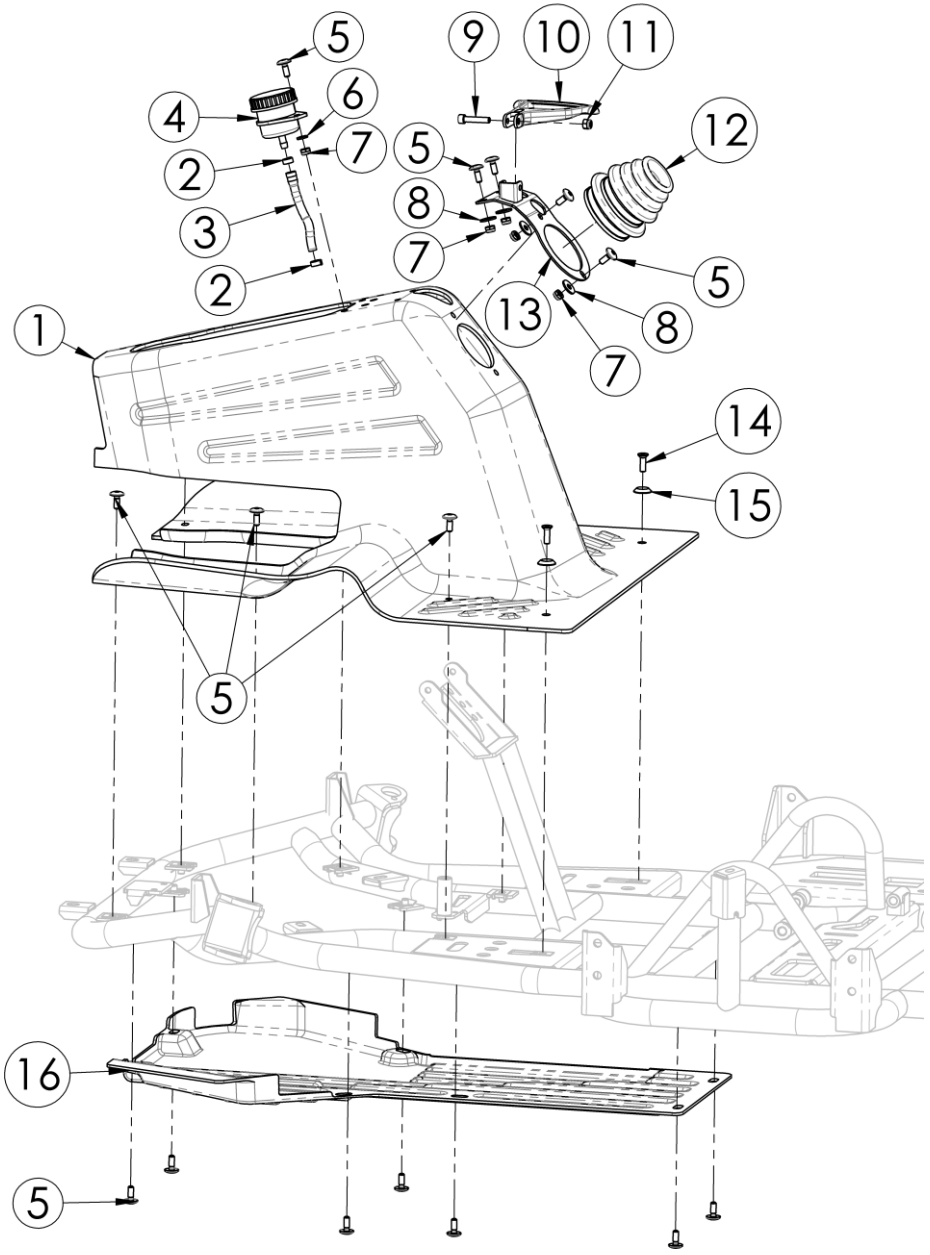

POS.	COD.	DESCRIZIONE	*DESCRIPTION*
1	AFS.0303705	CARENA PIANALE CENTURION MINI	FLOOR TRAY CTM
2	AFN.02937	FASCETTA ACCIAIO 7-11 TUBO CENTURION	*STEEL BAND 7-11 CENT*
3	AMS.00139	TUBO BENZINA AL METRO	*FUEL PIPE PER METER*
4	AFS.02325	SERBATOIO OLIO FRENI C/TAPPO CENTURION	*RECOVERY TANK W/CAP CENT*
5	AFS.00261	VITE TESTA TONDA LARGA M 6X 16 PIANALE	*FLOOR TRAY SCREW LARGE ROUND HEAD M6X16*
6	AFN.00105	RONDELLA 6,5-12X1,5	*WASHER 6,5-12X1,5*
7	AFN.00106	DADO M 6 AUTOBLOCK BASSO	*NUT M6 LOW SELF-LOCKING*
8	AFN.00263	RONDELLA 6,5-18X1,6	*WASHER 6,5-18X1,6*
9	AFN.00281	VITE M 6X 30 CILINDRICA 5931	*M 6X30 SOCKET HEAD SCREW*
10	SAG.01914	LEVA POMPA FRENO ANTERIORE CENTMINI	*CENTMINI LEVER FRONT PUMP*
11	AFN.00264	DADO M 6 AUTOBLOCK ALTO	*NUT M6 HIGH SELF-LOCKING*
12	AFS.03119	CUFFIA PER GIUNTO PIANTONE CENTMINI	*COVER FOR CENTMINI STEERING WHEEL*
13	SC0.03030	ATTACCO LEVA PEDALI COMPLETA CENTMINI	*PEDAL LEVER CONNECTION ASSY CTM*
14	AFN.00261	VITE M 6X 20 SVASATA 5933	*M6X20 COUNTERSUNK HEAD SCREW*
15	SAN.00249	RONDELLA 6 SVASATA NERA	*WASHER 6 COUNTERSUNK BLACK*
16	AFS.02745	CARTER PROTEZIONE CARRELLO PEDALE CENT	*CENT FOOTREST PROTECTION FAIRING*

CARENE – FAIRINGS

SOLO PER VERSIONE CON DUE LUCI STOP
ONLY FOR TWO BRAKE LIGHTS VERSION

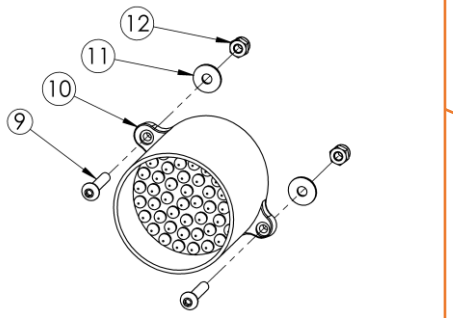

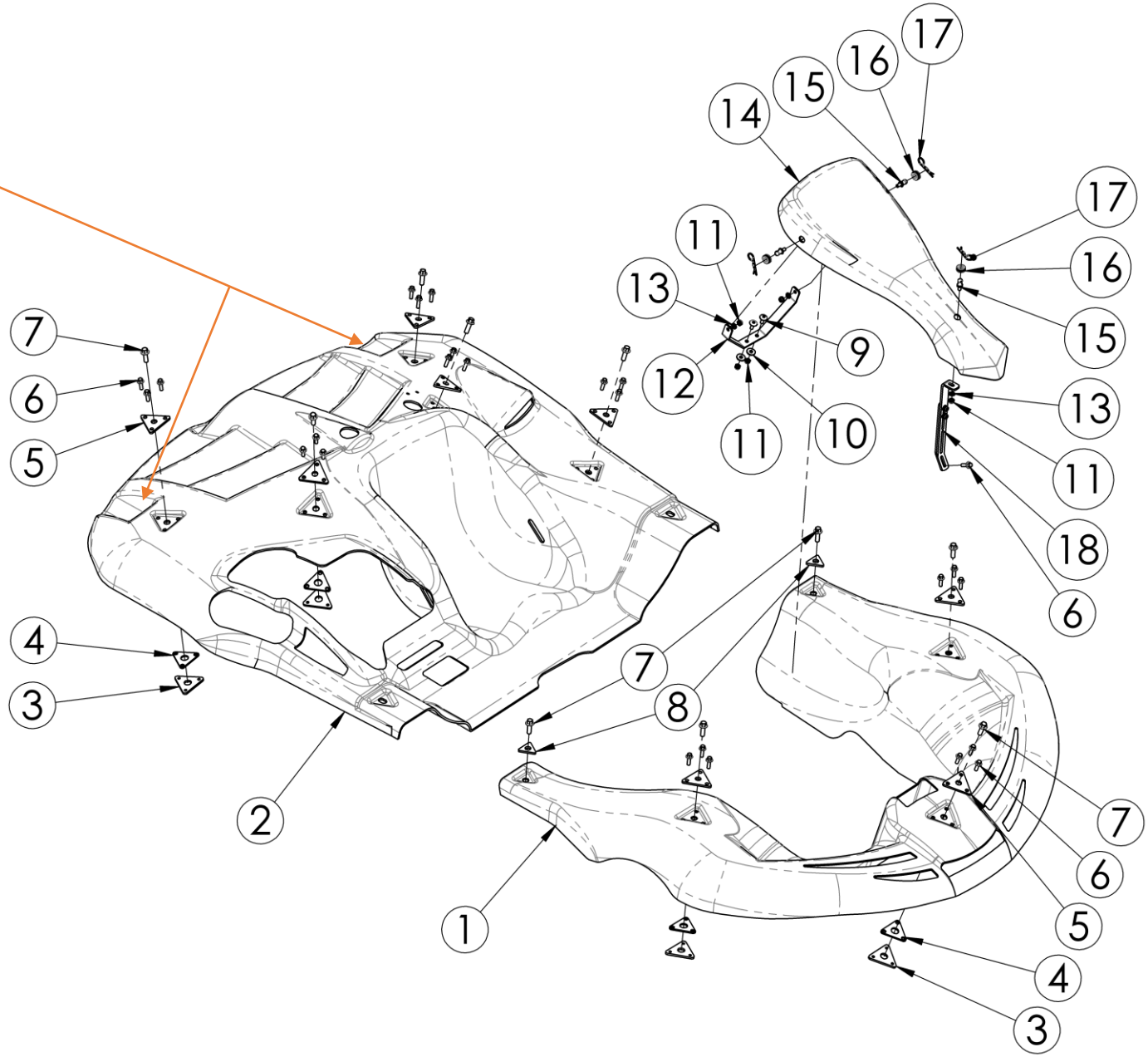

POS.	COD.	DESCRIZIONE	*DESCRIPTION*
1	AFS.03035	CARENA ANTERIORE CENTURIONMINI	FRONT FAIRING CTM
2	AFS.03036	CARENA POSTERIORE CENTURIONMINI	*MINI REAR FAIRING CTM*
3	SZ0.03098	PIASTRA ATTACCO CARENE CTM	*SIDE BUMPER CONNECT.PLATE CTM*
4	AFS.03083	GOMMA ATTACCO CARENE CENTURIONMINI	*SIDE BUMPER RUBBER CENT MINI*
5	SC0.03073	PIASTRA ATTACCO CARENE CENT+CENTMINI	*SIDE BUMPER CONNECT.PLATE CENT+ CENT MINI*
6	AFN.05445	VITE M 6X 20 FLANGIATA 6921	*M 6X 20 FLANGED SCREW*
7	AFN.00968	VITE M 8X 25 FLANGIATA 6921	*M 8X25 FLANGED SCREW*
8	SC0.03074	PIASTRA ATTACCO CARENE 1 FORO CTM	*SIDE BUMPER CONNECT.PLATE CTM*
9	AFS.00261	VITE TESTA TONDA LARGA M 6X 16 PIANALE	*FLOOR TRAY SCREW LARGE ROUND HEAD M6X16*
10	AFN.00263	RONDELLA 6,5-18X1,6	*WASHER 6,5-18X1,6*
11	AFN.00106	DADO M 6 AUTOBLOCK BASSO	*NUT M6 LOW SELF-LOCKING*
12	SC0.03086	SUPPORTO FRONTALINO SUPERIORE CENTMINI	*FRONT FAIRING SUPPORT UPPER CTM*
13	AFN.00105	RONDELLA 6,5-12X1,5	*WASHER 6,5-12X1,5*
14	AFS.03300	FRONTALINO MINI KG MK14 NERO	*MINI FRONT FAIRING KG MK14*
15	SBN.00103	PERNO SUPPORTO FRONTALINO INFERIORE	*FRONT FAIRING SUPPORT PIVOT BLACK*
16	AFS.04522	GOMMINO SUPPORTO FRONTALINO KG	*FRONT FAIRING RUBBER KG*
17	SZ0.00102	SPINA ELASTICA SUPPORTO FRONTALINO	*FRONT FAIRING ELASTIC PIN*
18	FK0.04457	SUPPORTO FRONTALINO INF. REG. CRG 2018 COMPL.	*COMPLETE CRG ADJUSTABLE LOWER FRONT FAIRING SUPPORT*

CINTURA DI SICUREZZA E ROLL BAR – SAFETY BELT AND ROLL BAR

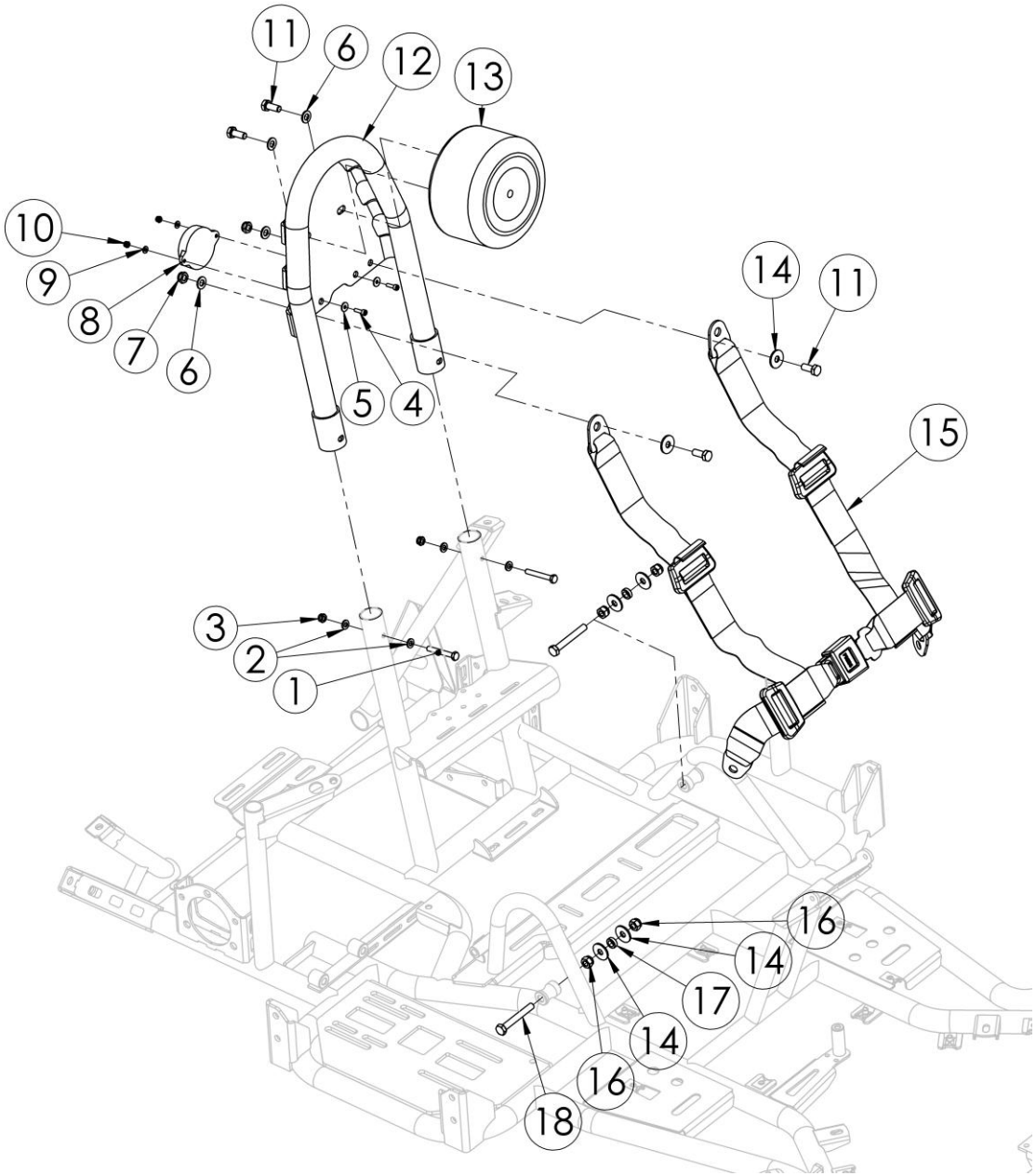

POS.	COD.	DESCRIZIONE	*DESCRIPTION*
1	AFN.04953	VITE M 6X 45 ESAGONALE 5739	*M 6X 45 HEXAGONAL HEAD SCREW*
2	AFN.00105	RONDELLA 6,5-12X1,5	*WASHER 6,5-12X1,5*
3	AFN.00106	DADO M 6 AUTOBLOCK BASSO	*NUT M6 LOW SELF-LOCKING*
4	AFN.06383	VITE M 4X 14 CILINDRICA 5931	*M 4X 14 SOCKET HEAD SCREW*
5	AFN.07225	RONDELLA 4-8X0,5	*WASHER 4-8X0,5*
6	AFN.00350	RONDELLA 8,5-16X1,5	*WASHER 8,5-16X1,5*
7	AFN.00160	DADO M 8 AUTOBLOCK BASSO	*NUT M8 LOW SELF-LOCKING*
8	AFS.06483	LUCE STOP POSTERIORE CENT 2.0	*REAR STOP LIGHT CENT 2.0*
9	AFN.02445	RONDELLA 4-12X0,5	*WASHER 4-12X0,5*
10	AFN.02544	DADO M 4 AUTOBLOCK BASSO	*M4 HIGH SELF-LOCKING NUT*
11	AFN.00909	VITE M 8X 20 ESAGONALE	*M8X20 HEXAGONAL HEAD SCREW*
12	FVO.03082	ROLLBAR CENTURIONMINI NERO OPACO	*MATTE BLACK CENTURION MINI ROLLBAR*
13	AFS.05760	POGGIATESTA CRG RENT TONDO STAMPATO	*PADDED HEADREST CRG RENT*
14	AFN.02415	RONDELLA 8,5-24X2	*8,5-24X2 WASHER*
15	AFS.03090	CINTURA SICUREZZA 4 PUNTI CENT MINI	*SEAT SAFETY BELT CENT MINI*
16	AFN.00128	DADO M 8 AUTOBLOCK ALTO	*NUT M8 HIGH SELF-LOCKING*
17	FBN.00252	SPESSORE 8,5-14X 5 BARRETTA	*ROD SPACER 8,5-14X5 TRACK ROD*
18	AFN.02291	VITE M 8X 60 ESAGONALE 5739	*M 8X 60 HEXAGONAL HEAD SCREW*

RUOTE – WHEELS

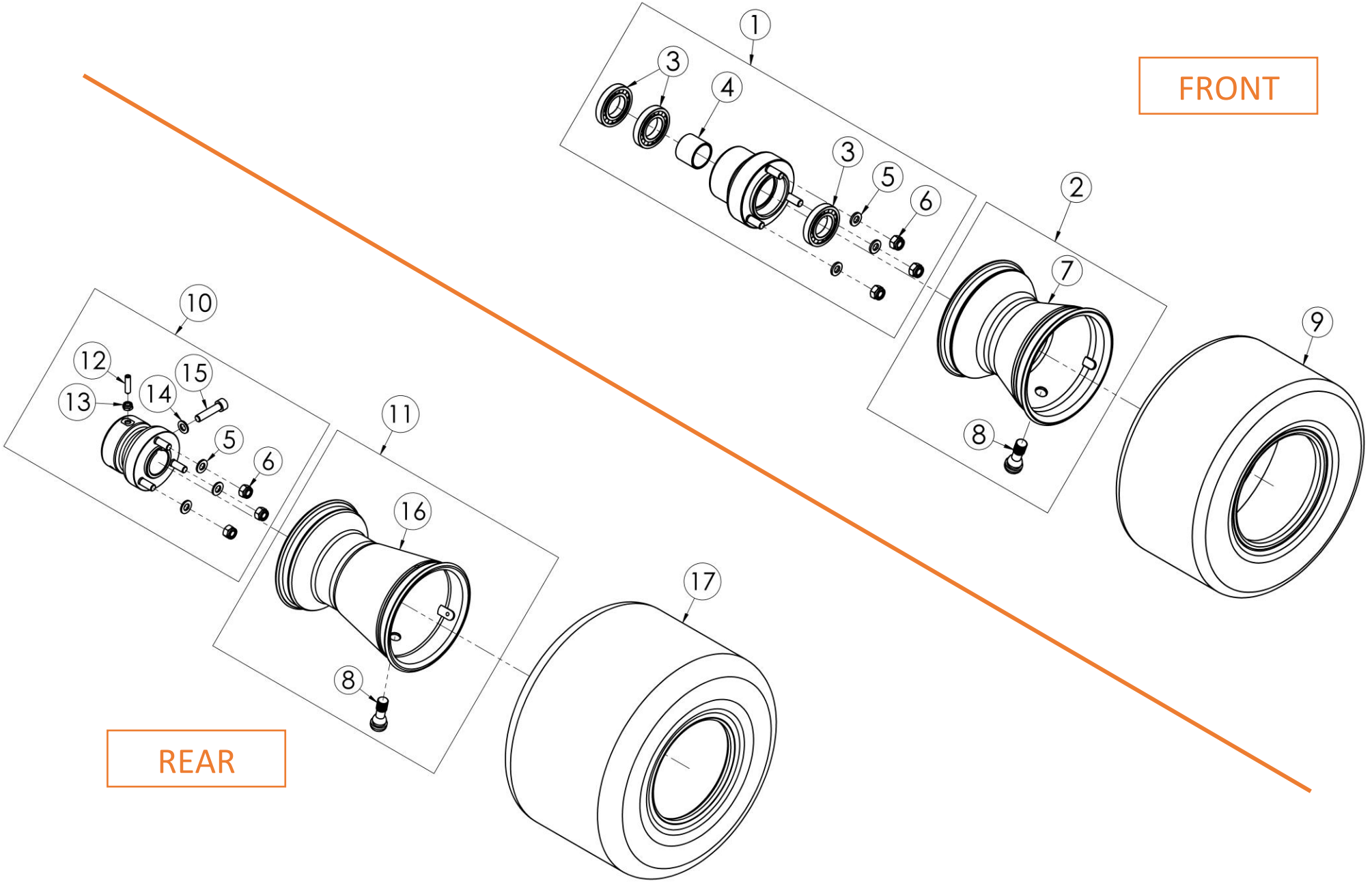

POS.	COD.	DESCRIZIONE	*DESCRIPTION*
1	FM0.00640	MOZZO RUOTA ANTERIORE CORTO CENT	FRONT WHEEL BOSS SHORT CENT
2	FM0.03794	CERCHIO AL H132 ANT NO VITI CENT COMP.	*ALU FRONT WHEEL H132 N/SCREWS ASSY CENT*
3	AFN.00685	CUSCINETTO 6005 ZZ MOZZO ANT.NOL	*BEARING RENTAL FRONT WHEEL HUB*
4	SZ0.04243	DISTANZIALE MOZZO ANT CENT	*CENTURION FRONT HUB SPACER*
5	AFN.00108	RONDELLA 8,5-18X2	*WASHER 8,5-18X2*
6	AFN.00128	DADO M 8 AUTOBLOCK ALTO	*NUT M8 HIGH SELF-LOCKING*
7	SL1.00222	CERCHIO AL H130 ANT NO FORI VITI CENT	*RIM H130 ALU NO SCREWS*
8	AFS.02649	VALVOLA TUBLESS CORTA	*TUBLESS VALVE SHORT*
9	XXX.XXXX	PNEUMATICO ANTERIORE	*FRONT TYRE*
10	FM0.01845	MOZZO POSTERIORE 30X 60 CENTURION	REAR HUB 30X 60 COMPLETE
11	FM0.00293NEUT	CERCHIO AL H180 POST NO VITI COMP.	*ALUMINUM REAR RIM H180 NO SCREWS*
12	AFN.04792	GRANO M 6X25 TESTA A PUNTA	*GRUB SCREW M6X25*
13	AFN.00106	DADO M 6 AUTOBLOCK BASSO	*NUT M6 LOW SELF-LOCKING*
14	AFN.00287	RONDELLA 8,5-14X1,5	*WASHER 8,5-14X1,5*
15	AFN.02153	VITE M 8X 35 CILINDRICA 5931	*M 8X35 SOCKET HEAD SCREW*
16	SL1.00293	CERCHIO AL H180 POST NO FORI VITI CENT/PUFFO	*RIM H180 ALU NO SCREWS*
17	XXX.XXXX	PNEUMATICO POSTERIORE	*REAR TYRE*

KIT ADESIVI – STICKERS KIT

1



2



POS.	COD.	DESCRIZIONE	*DESCRIPTION*
1	AFS.05438	KIT ADESIVI CENT/CE MINI 2020 OPACO	*STICKERS KIT MINI CENT/CE MATT*
2	AFS.05281	KIT ADESIVI CRG MINI MK14 FRONTALINO	*MINI MK14 FRONT FAIRING STICKER KIT*

TUTA KART – RACING SUIT / CASCO - HELMET



POS.	COD.	DESCRIZIONE	*DESCRIPTION*
1	XXX.XXXX	TUTA KART CRG-SPARCO	CRG-SPARCO RACING SUIT
2	XXX.XXXX	CASCO INTEGRALE CON VISIERA	FULL FACE HELMET WITH VISOR
3	XXX.XXXX	CASCO APERTO	OPEN HELMET

CENTURION MINI

C.R.G. S.r.l. Via Mantova 4F - 25017 Lonato del Garda (BS) Tel. +39.030.9912604 Fax +39.030.9130714
www.crgrentalkart.com - rental@kartcrg.com