

CRG

Catalogo

Catalogue 2026

DRENALINE

Rel 143

INDICE

SCOCCA – FRAME 5
SCOCCA E DRENALINE COMPLETA – E DRENALINE FRAME ASSY 7
GRUPPO TRASMISSIONE – TRANSMISSION GROUP 9
ASSIEME MOTORE SINISTRO LINDE – LEFT LINDE ENGINE ASSEMBLY 11
ASSIEME MOTORE DESTRO LINDE – RIGHT LINDE ENGINE ASSEMBLY 13
ASSIEME MOTORE DESTRO LINDE – RIGHT LINDE ENGINE ASSEMBLY 15
ASSIEME VENTOLA DI RAFFREDDAMENTO – COOLING FAN ASSEMBLY 17
PEDALIERA E-DRENALINE – E-DRENALINE FOOTREST – **LEGACY <2025** 19
PEDALIERA E-DRENALINE – E-DRENALINE FOOTREST 21
PEDALI E-DRENALINE – E-DRENALINE PEDALS - **LEGACY <2025** 23
PEDALI E-DRENALINE – E-DRENALINE PEDALS 25
CARRELLO PEDALE E-DRENALINE – E-DRENALINE PEDAL SLIDER – **LEGACY <2025** 27
CARRELLO PEDALE E-DRENALINE – E-DRENALINE PEDAL SLIDER – **LEGACY <2025** 29
CARRELLO PEDALE E-DRENALINE – PEDAL SLIDER E-DRENALINE 31
CARRELLO PEDALE E-DRENALINE – PEDAL SLIDER E-DRENALINE 33
GUIDA MOTORIZZATA PEDALIERA – MOTORIZED PEDAL SLIDER – **LEGACY <2025** 35
GUIDA MOTORIZZATA PEDALIERA – MOTORIZED PEDAL SLIDER 37
GRUPPO FRENO ANTERIORE CE - FRONT BRAKE ASSY 39
IMPIANTO FRENANTE ANTERIORE – FRONT BRAKE SYSTEM 41
POMPA FRENO – MASTER CYLINDER 43
GRUPPO STERZO CENT E - CENT E STEERING GROUP – **LEGACY <2025** 45
GRUPPO STERZO CENT E - CENT E STEERING GROUP 47
ASSIEME VOLANTE E-DRENALINE - E-DRENALINE STEERING WHEEL ASSY – **LEGACY <2025** 49
ASSIEME VOLANTE E-DRENALINE - E-DRENALINE STEERING WHEEL ASSY 51
ASSIEME ELETTRONICA PIANTONE – STEERING SHAFT ELECTRONICS ASSY – **LEGACY <2025** 53
ASSIEME ELETTRONICA PIANTONE – STEERING SHAFT ELECTRONICS ASSEMBLY 55
INVERTER COMPLETO – INVERTER ASSEMBLY 57
ASSIEME BATTERIA CE 60AH- CE 60AH BATTERY ASSEMBLY – **LEGACY <2025** 59
PACCO BATTERIE - CE BATTERY PACK – **LEGACY <2025** 61
ASSIEME BATTERIA CE 7.5 KWH - CE 7.5 KWH BATTERY ASSEMBLY 63
CABLAGGI – WIRING HARNESSES – **LEGACY <2025** 65
CABLAGGI – WIRING HARNESSES 67
KIT PARAURTI E SUPPORTI CARENE – BUMPER KIT AND FAIRING SUPPORT 69
PROTEZIONI LATERALI E POSTERIORI – SIDE AND REAR BUMPERS 71
PROTEZIONE ANTERIORE – FRONT BUFFER 73
KIT CARENE – FAIRING KIT 75
GRUPPO SEDILE COMPLETO – SEAT UNIT ASSEMBLY 77
KIT ROLLBAR E-DRENALINE 79
TUTA KART E CASCO – RACING SUIT AND HELMET 81
OPTIONAL RIDUZIONE SEDILE IN GOMMA – OPTIONAL RUBBER SEAT REDUCTION 83

REL N°	DATE	CHANGELOG

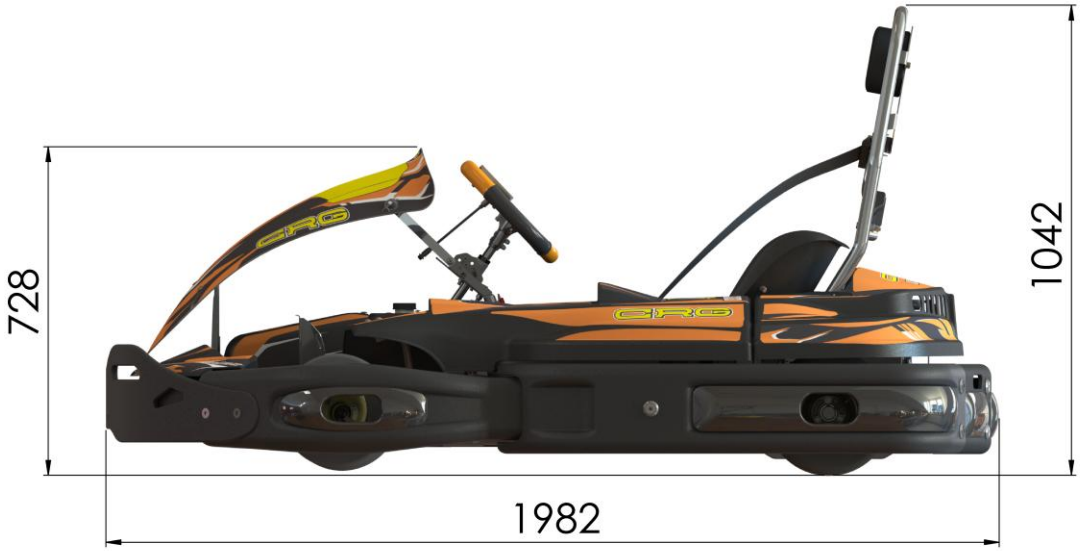







DRENALINE

SCOCCA – FRAME

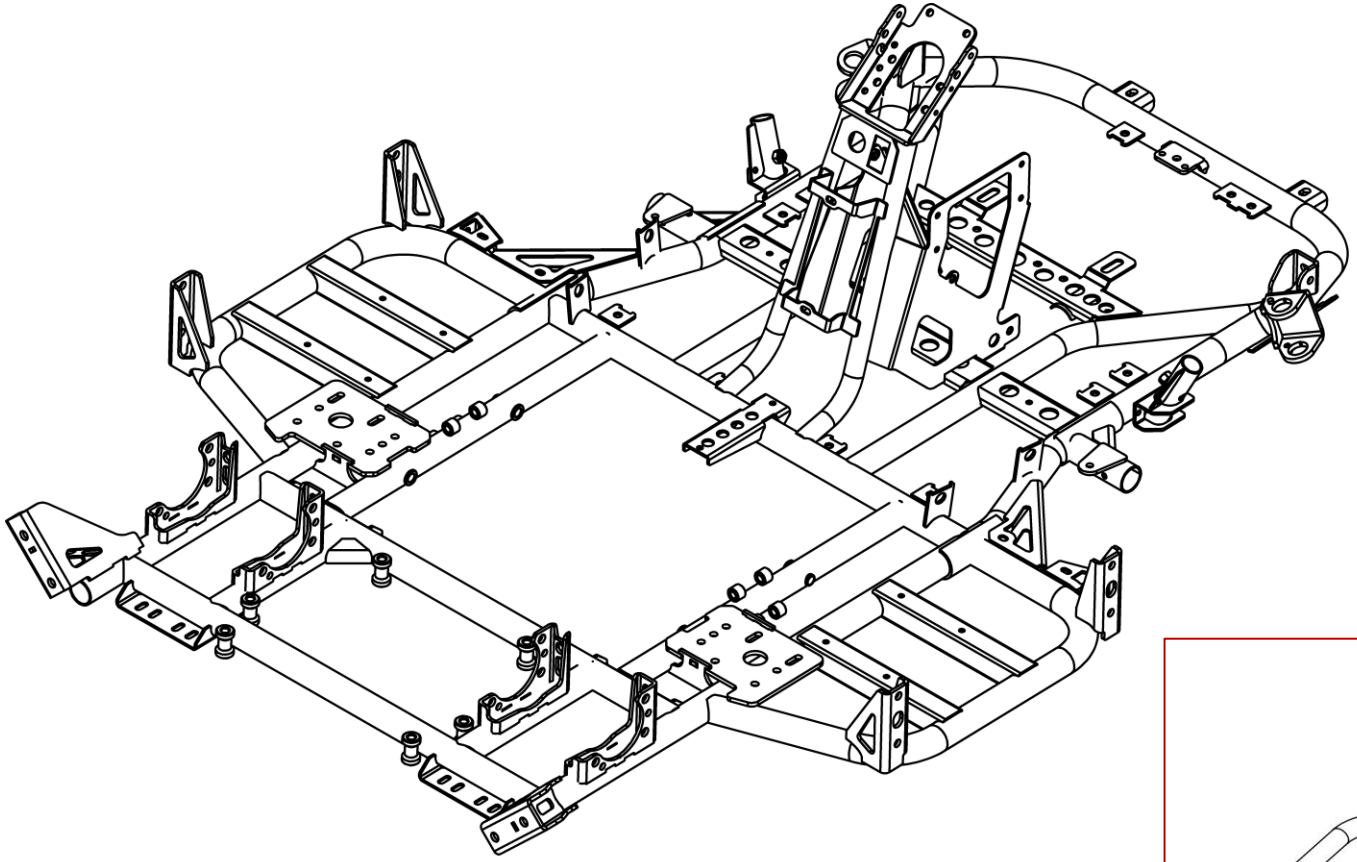

OLD VERSION

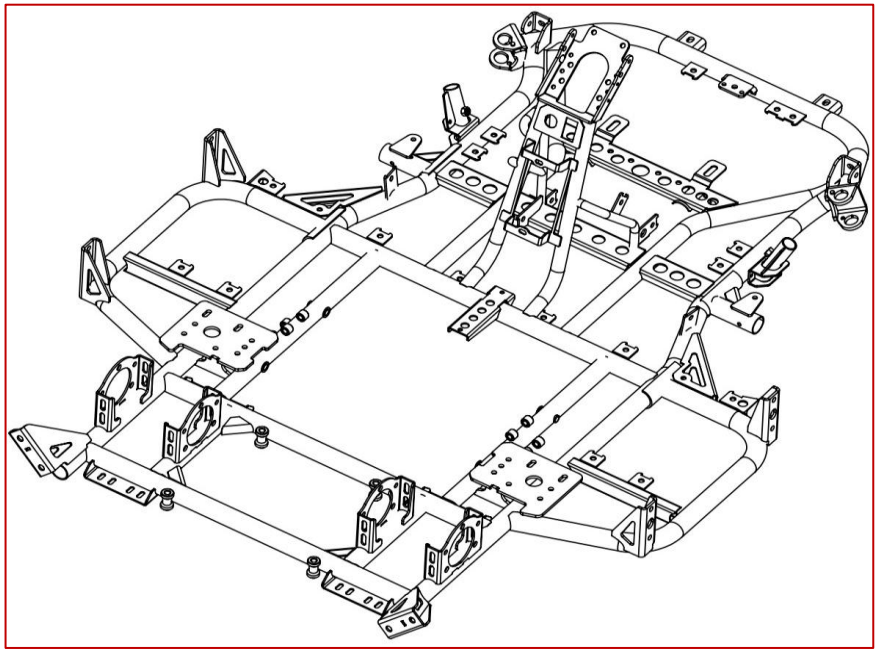

	COD.	DESCRIZIONE	*DESCRIPTION*
1	FVO.E0264	SCOCCA CE PER CARENE LAT. BASCULANTI NERO OPACO	*CENT FRAME FOR MOVING SIDE FAIRING MATTE BLACK*

SCOCCA E DRENALINE COMPLETA – E DRENALINE FRAME ASSY

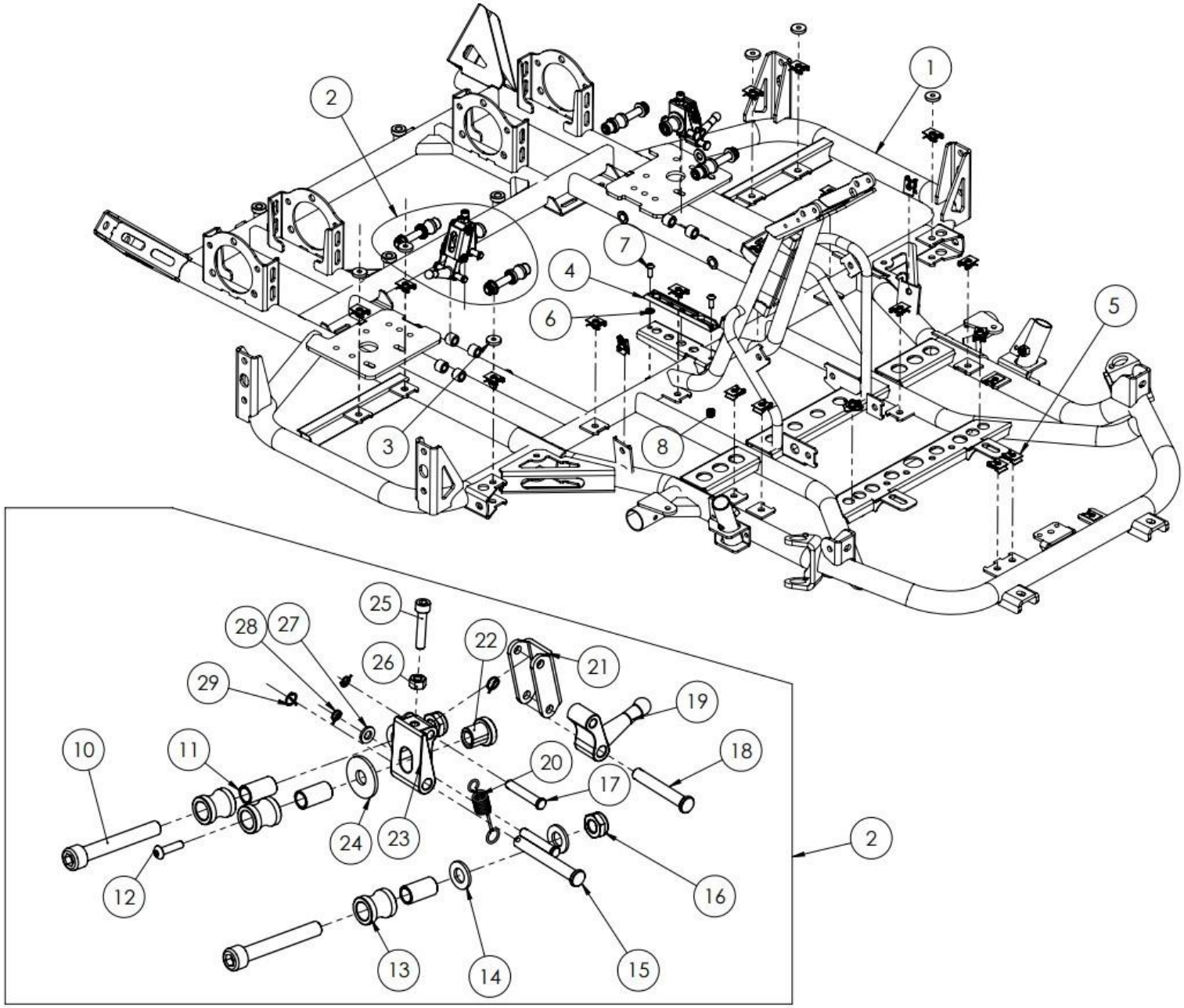

SCOCCA E DRENALINE COMPLETA – E DRENALINE FRAME ASSY

POS.	COD.	DESCRIZIONE	DESCRIPTION
1	FVO.E0264	SCOCCA CE PER CARENE LAT. BASCULANTI NERO OPACO	*CENT FRAME FOR MOVING SIDE FAIRING MATTE BLACK*
2	FM0.E0004	FISSAGGIO CARRELLO SEDILE CE	*SEAT CART BLOCK*
3	AFS.00258	GOMMINO PIANALE	*FLOOR TRAY RUBBER*
4	SZ0.E0091	PIASTRA FISSAGGIO SEDILE CE	*CE SEAT SELECTOR PLATE*
5	AFS.02327	CLIPS PRESTOLA M6 CENTURION	*CENTURION CLIPS M6 FOR FITTING*
6	AFN.00105	RONDELLA 6,5-12X1,5	*WASHER 6,5-12X1,5*
7	AFN.00502	VITE M 6X 16 BOMBATA 7380	*M 6X16 CONVEX HEAD SCREW*
8	AFN.00264	DADO M 6 AUTOBLOCK ALTO	*NUT M6 HIGH SELF-LOCKING*
10	AFN.03628	VITE M10X 70 CILINDRICA 5931	*M10X70 HEXAGON SOCKET SCREW*
11	SZ0.E0035	BUSSOLA RULLINO PLASTICA CE	*SEAT GUIDE ROLLER INNER RING*
12	AFN.05663	VITE M 5X 20 BOMBATA 7380	*M 5X 20 CONVEX HEAD SCREW*
13	CE0009503	RULLINO CARRELLO SEDILE REGOLABILE CE	*CE SEAT GUIDE ROLLER*
14	AFN.01637	RONDELLA 10,5-20X2	*WASHER 10,5-20X2*
15	SZ0.E0054	SPINA 8X62 CE	*8X62 PIN*
16	AFN.00657	DADO M10 AUTOBLOCK BASSO	*NUT M10 LOW SELF-LOCKING*
17	SBN.00202	SPINA POMPA FRENI MM35,5	*BRAKE MASTER CYLINDER PIN 35,5MM*
18	SZ0.E0053	SPINA 8X52 CE	*8X52 PIN*
19	CE00004	MANOPOLA FISS. CARRELLO SEDILE CE	*CE SEAT MOUNTING HANDLE*
20	SZ0.E0051	MOLLA FIX CARRELLO SEDILE CE	*CE SEAT GUIDE SPRING*
21	SZ0.E0966	LEVA MANOPOLA FIX CARR.SEDILE CE	*CE SEAT MOUNTING LEVER*
22	SZ0.E0048	BUSSOLA OVALE M10 CE	*M10 OVAL FIXING*
23	CE00047	CORPO FISSAGGIO CARRELLO SEDILE CE	*CE SEAT MOUNTIG BODY*
24	SZ0.E1082	RONDELLA 10 -22X5 CE	*10X22X5 WASHER*
25	AFN.00281	VITE M 6X 30 CILINDRICA 5931	*M 6X30 SOCKET HEAD SCREW*
26	AFN.00093	DADO M 6	*NUT M 6*
27	AFN.00105	RONDELLA 6,5-12X1,5	*WASHER 6,5-12X1,5*
28	AFS.00203	SPINA ELASTICA D 6	*D6 ELASTIC PIN*
29	AFS.00981	SPINA ELASTICA D 8	*ELASTIC PIN D8*

GRUPPO TRASMISSIONE – TRANSMISSION GROUP

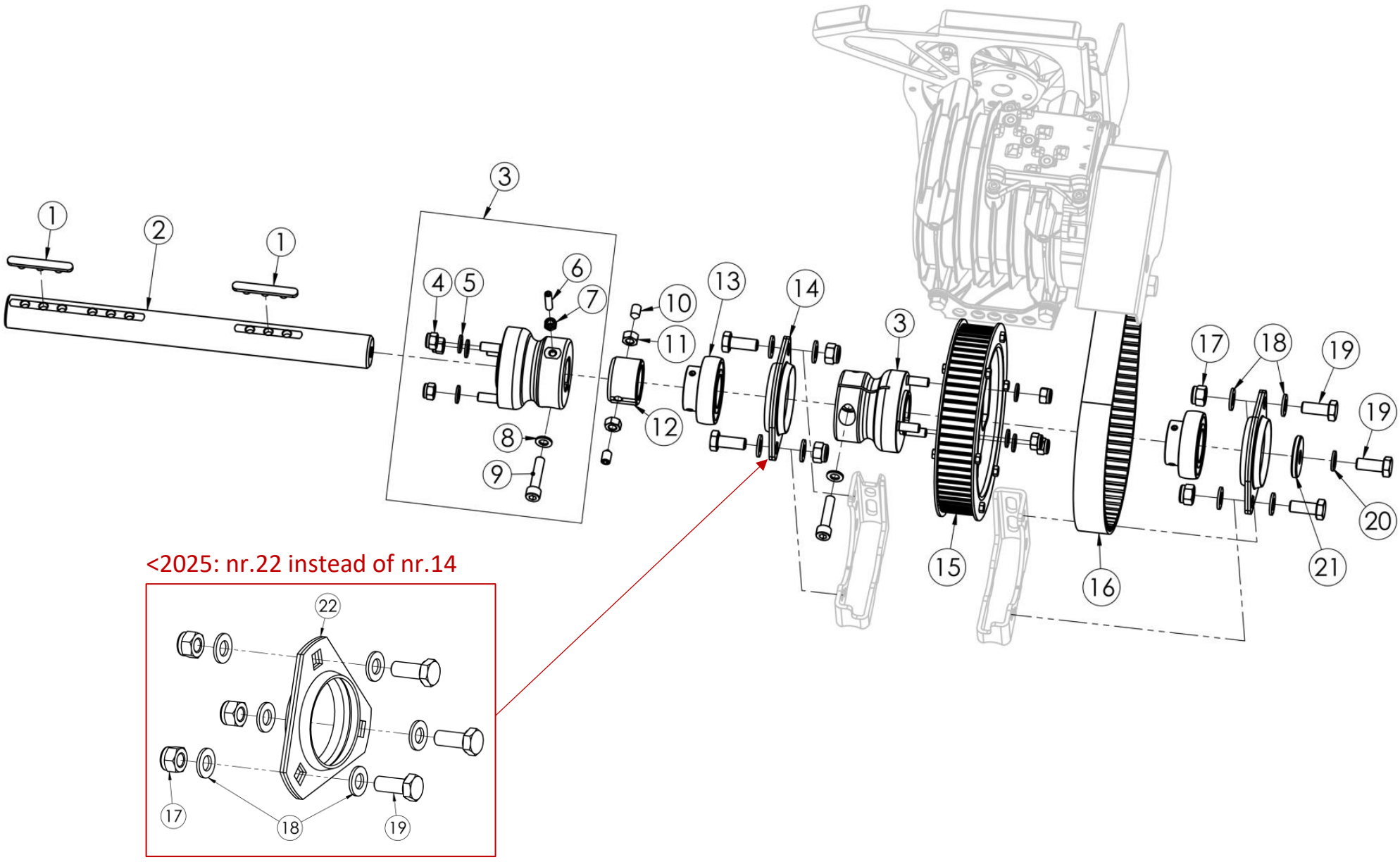

POS.	COD.	DESCRIZIONE	*DESCRIPTION*
1	AFS.0024701	CHIAVETTA ASSALE 3 PIOLI BRUNITA	REAR AXLE KEYWAY 3 PINS
2	SC0.06088	SEMIASSE DX/SX CE X FRENO POST.	*RH/LH CE REAR BRAKE HALF SHAFT*
3	FM0.01845	MOZZO POSTERIORE 30X 60 CENTURION	*REAR HUB 30X 60 COMPLETE*
4	AFN.00128	DADO M 8 AUTOBLOCK ALTO	*NUT M8 HIGH SELF-LOCKING*
5	AFN.00350	RONDELLA 8,5-16X1,5	*WASHER 8,5-16X1,5*
6	AFN.04792	GRANO M 6X25 TESTA A PUNTA	*GRUB SCREW M6X25*
7	AFN.00106	DADO M 6 AUTOBLOCK BASSO	*NUT M6 LOW SELF-LOCKING*
8	AFN.00287	RONDELLA 8,5-14X1,5	*WASHER 8,5-14X1,5*
9	AFN.02153	VITE M 8X 35 CILINDRICA 5931	*M 8X35 SOCKET HEAD SCREW*
10	AFN.05529	GRANO M 8X14 TESTA A PUNTA	*M8X14 GRUB SCREW*
11	AFN.0049D	DADO M 8 DX	*NUT M8*
12	SZ0.02519	BOCCOLA CENTURION FISSAGGIO ASSALE	*REAR AXLE CLAMP BUSHING CENT*
13	AFS.06695	CUSCINETTO ASSALE 30 CE UC206 GRANO M8	*AXLE BEARING 30 CE UC206 GRUB SCREW M8*
14	AFN.06822	COPPIA FLANGE X CUSCINETTO ASSALE 30 2F CENT	*AXLE BEARING FLANGE PAIR CENT 2.0*
15	FM0.E0089	PULEGGIA ASSALE 28MM Z68 8M ALL CE CON FLANGE	*COGGED PULLEY Z68 CE*
16	CE00152	CINGHIA 800 8M 28 CENT	*BELT 800 8MX28*
17	AFN.02393	DADO M10 AUTOBLOCK ALTO	*NUT M10 HIGH SELF-LOCKING*
18	AFN.01637	RONDELLA 10,5-20X2	*WASHER 10,5-20X2*
19	AFN.02845	VITE M10X 25 ESAGONALE 5739	*M10X25 HEXAGONAL HEAD SCREW*
20	AFN.03733	RONDELLA ELASTICA SPACCATA GROWER M10	*D10 GROWER WASHER*
21	SZ0.E0079	RONDELLA 10 -38X5 CE	*10-38X5 WASHER*
22	AFN.05680	COPPIA FLANGE X CUSCINETTO ASSALE 30 3F CE	*30 3F CE AXLE BEARING FLANGES PAIR*

ASSIEME MOTORE SINISTRO LINDE – LEFT LINDE ENGINE ASSEMBLY

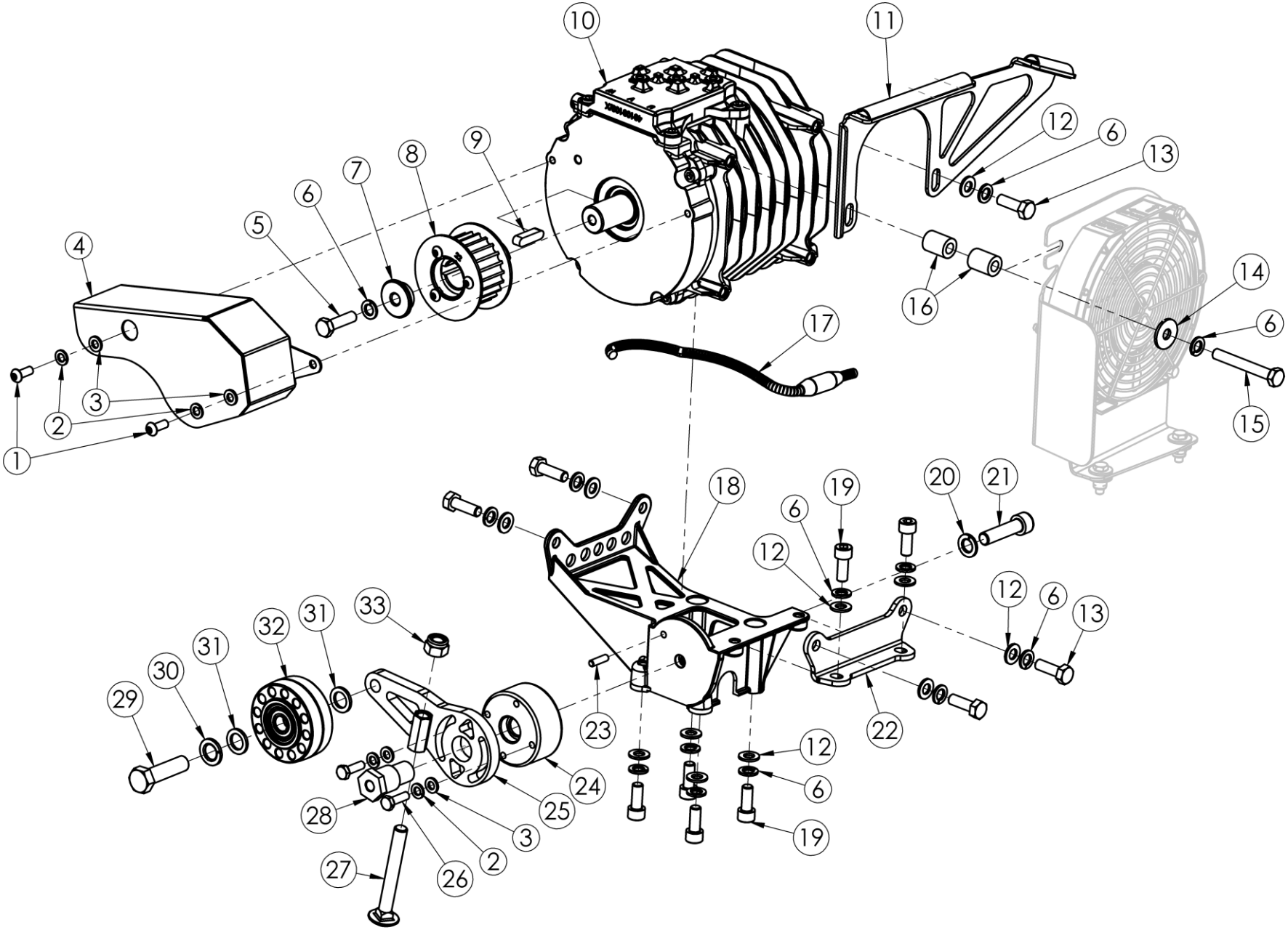

ASSIEME MOTORE SINISTRO LINDE – LEFT LINDE ENGINE ASSEMBLY

POS.	COD.	DESCRIZIONE	*DESCRIPTION*
1	AFN.00502	VITE M 6X 16 BOMBATA 7380	*M 6X16 CONVEX HEAD SCREW*
2	AFN.03732	RONDELLA ELASTICA SPACCATA GROWER M 6	*M6 ELASTIC WASHER GROWER*
3	AFN.00105	RONDELLA 6,5-12X1,5	*WASHER 6,5-12X1,5*
4	FVO.6893S	CARTER PULEGGIA CE SX NERO OPACO	*LH MATTE BLACK PULLEY COVER*
5	AFN.00307	VITE M 8X 30 ESAGONALE 5739	*M 8X30 HEXAGONAL HEAD SCREW*
6	CE00108	RONDELLA ELASTICA SPACCATA GROWER M 8	*M8 GROWER WASHER*
7	SZ0.E0259	BUSSOLA FISSAGGIO PULEGGIA MOTORE CE	*CE ENGINE PULLEY SPACER*
8	FM0.05304	PULEGGIA MOTORE 28MM Z22 8M ALL CE COMP	*CE ENGINE PULLEY Z22 88MM*
9	AFN.05799	CHIAVETTA 7X7X28 TIPO AB CENTURION	*KEY 7X7X28 AB CENT*
10	CE00123	MOTORE LINDE CE	*LINDE MOTOR CE*
11	SZ0.04656	SUPPORTO CARENA LATERALE BASCULANTE CE FE SX	*CE LEFT FAIRING STAND*
12	AFN.00350	RONDELLA 8,5-16X1,5	*WASHER 8,5-16X1,5*
13	AFN.00107	VITE M 8X 25 ESAGONALE 5739	*M 8X25 HEXAGONAL HEAD SCREW*
14	AFN.02415	RONDELLA 8,5-24X2	*8,5-24X2 WASHER*
15	AFN.02291	VITE M 8X 60 ESAGONALE 5739	*M 8X 60 HEXAGONAL HEAD SCREW*
16	SZ0.02307	DISTANZIALE FISSAGGIO BARRETTE CENT Ø8,5X16-20	*TRACK ROD CLAMP SPACER CENT*
17	AFS.07010	GUAINA NYLON APRIBILE D.10	*PROTECT WRAP 10MM FR BLACK METER*
18	SZ0.E018104	SUPPORTO MOTORE VERTICALE CE SX	*LEFT ENGINE MOUNT*
19	AFN.02545	VITE M 8X 20 CILINDRICA 5931	*M 8X 20 SOCKET HEAD SCREW*
20	AFN.03733	RONDELLA ELASTICA SPACCATA GROWER M10	*D10 GROWER WASHER*
21	AFN.00279	VITE M10X 40 CILINDRICA 5931	*M10X40 SOCKET HEAD SCREW*
22	SZ0.E1195	SUPPORTO MOTORE VERTICALE B LINDE	*ENGINE MOUNT CLAMP CE*
23	A98.0483400	SPINA 5X18 RETTIFICATA	*MODIFIED 5X18 PIN*
24	SL1.05136	REGISTRO LEVA TENDICINGHIA CE 2.0	*BELT TENSIONER CE 2.0 LOCK*
25	SZ0.5134S	LEVA TENDICINGHIA CE 2.0 SX	*TENSIONER LEVER CE 2.0 LF*
26	AFN.00233	VITE M 6X 20 ESAGONALE 5739	*M6X20 HEXAGONAL HEAD SCREW*
27	AFN.05499	VITE M10X 80 TESTA TONDA QUADRO SOTTOTES.	*ROUND HEAD SQUARE NECK SCREW M10X80*
28	SZ0.05135	BUSSOLA LEVA TENDICINGHIA CE 2.0	*BELT TENSIONER CE 2.0 BUSHING*
29	AFN.04180	VITE M12X 45 ESAGONALE 5739 ZNC	*M12X45 HEX SCREW*
30	AFN.03734	RONDELLA ELASTICA SPACCATA GROWER M12	*M12 GROWER WASHER*
31	AFN.00287	RONDELLA 8,5-14X1,5	*WASHER 8,5-14X1,5*
32	FM0.E0254	RULLO TENDICINGHIA ALLUMINIO PER TC1 CE COMPL.	*CE ALUMINUM BELT TENSIONER ROLLER*
33	AFN.02393	DADO M10 AUTOBLOCK ALTO	*NUT M10 HIGH SELF-LOCKING*

ASSIEME MOTORE DESTRO LINDE – RIGHT LINDE ENGINE ASSEMBLY

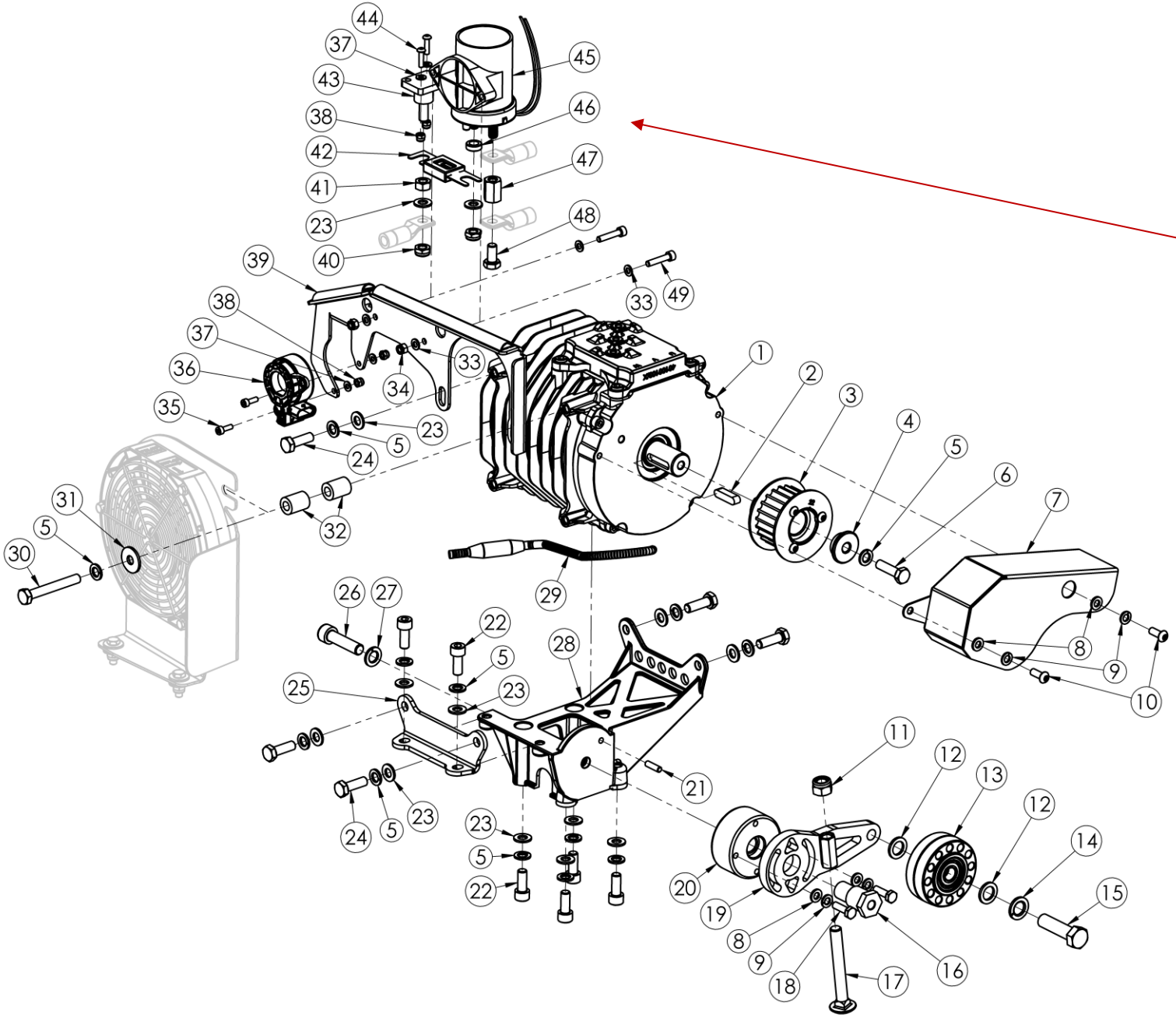

Contactor – Legacy <2025

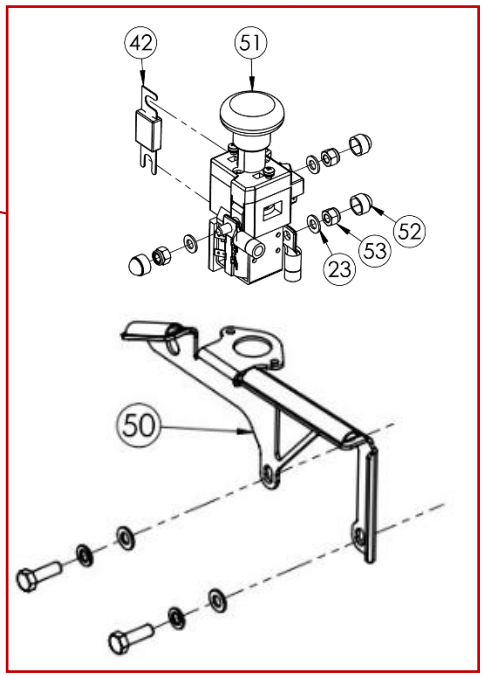

ASSIEME MOTORE DESTRO LINDE – RIGHT LINDE ENGINE ASSEMBLY

POS.	COD.	DESCRIZIONE	*DESCRIPTION*
1	CE00123	MOTORE LINDE CE	LINDE MOTOR CE
2	AFN.05799	CHIAVETTA 7X7X28 TIPO AB CENTURION	*KEY 7X7X28 AB CENT*
3	FM0.05304	PULEGGIA MOTORE 28MM Z22 8M ALL CE COMP	*CE ENGINE PULLEY Z22 88MM*
4	SZ0.E0259	BUSSOLA FISSAGGIO PULEGGIA MOTORE CE	*CE ENGINE PULLEY SPACER*
5	CE00108	RONDELLA ELASTICA SPACCATA GROWER M 8	*M8 GROWER WASHER*
6	AFN.00307	VITE M 8X 30 ESAGONALE 5739	*M 8X30 HEXAGONAL HEAD SCREW*
7	FVO.6893D	CARTER PULEGGIA CE DX NERO OPACO	*RH MATTE BLACK PULLEY COVER*
8	AFN.00105	RONDELLA 6,5-12X1,5	*WASHER 6,5-12X1,5*
9	AFN.03732	RONDELLA ELASTICA SPACCATA GROWER M 6	*M6 ELASTIC WASHER GROWER*
10	AFN.00502	VITE M 6X 16 BOMBATA 7380	*M 6X16 CONVEX HEAD SCREW*
11	AFN.02393	DADO M10 AUTOBLOCK ALTO	*NUT M10 HIGH SELF-LOCKING*
12	AFN.03560	RONDELLA 12 -20X2 ZINCATA	*WASHER 12 -20X2*
13	FM0.E0254	RULLO TENDICINGHIA ALLUMINIO PER TC1 CE COMPL.	*CE ALUMINUM BELT TENSIONER ROLLER*
14	AFN.03734	RONDELLA ELASTICA SPACCATA GROWER M12	*M12 GROWER WASHER*
15	AFN.04180	VITE M12X 45 ESAGONALE 5739 ZNC	*M12X45 HEX SCREW*
16	SZ0.05135	BUSSOLA LEVA TENDICINGHIA CE 2.0	*BELT TENSIONER CE 2.0 BUSHING*
17	AFN.05499	VITE M10X 80 TESTA TONDA QUADRO SOTTOTES.	*ROUND HEAD SQUARE NECK SCREW M10X80*
18	AFN.00233	VITE M 6X 20 ESAGONALE 5739	*M6X20 HEXAGONAL HEAD SCREW*
19	SZ0.5134S	LEVA TENDICINGHIA CE 2.0 SX	*TENSIONER LEVER CE 2.0 LF*
20	SL1.05136	REGISTRO LEVA TENDICINGHIA CE 2.0	*BELT TENSIONER CE 2.0 LOCK*
21	A98.0483400	SPINA 5X18 RETTIFICATA	*MODIFIED 5X18 PIN*
22	AFN.02545	VITE M 8X 20 CILINDRICA 5931	*M 8X 20 SOCKET HEAD SCREW*
23	AFN.00350	RONDELLA 8,5-16X1,5	*WASHER 8,5-16X1,5*
24	AFN.00107	VITE M 8X 25 ESAGONALE 5739	*M 8X25 HEXAGONAL HEAD SCREW*
25	SZ0.E1195	SUPPORTO MOTORE VERTICALE B LINDE	*ENGINE MOUNT CLAMP CE*
26	AFN.00279	VITE M10X 40 CILINDRICA 5931	*M10X40 SOCKET HEAD SCREW*
27	AFN.03733	RONDELLA ELASTICA SPACCATA GROWER M10	*D10 GROWER WASHER*
28	SZ0.E018004	SUPPORTO MOTORE VERTICALE CE DX	*RIGHT ENGINE MOUNT CE*
29	AFS.07010	GUAINA NYLON APRIBILE D.10	*PROTECT WRAP 10MM FR BLACK METER*
30	AFN.02291	VITE M 8X 60 ESAGONALE 5739	*M 8X 60 HEXAGONAL HEAD SCREW*
31	AFN.02415	RONDELLA 8,5-24X2	*8,5-24X2 WASHER*
32	SZ0.02307	DISTANZIALE FISSAGGIO BARRETTE CENT Ø8,5X16-20	*TRACK ROD CLAMP SPACER CENT*
33	AFN.02264	RONDELLA 5,3-10X1	*WASHER 5,3-10X1*

ASSIEME MOTORE DESTRO LINDE – RIGHT LINDE ENGINE ASSEMBLY

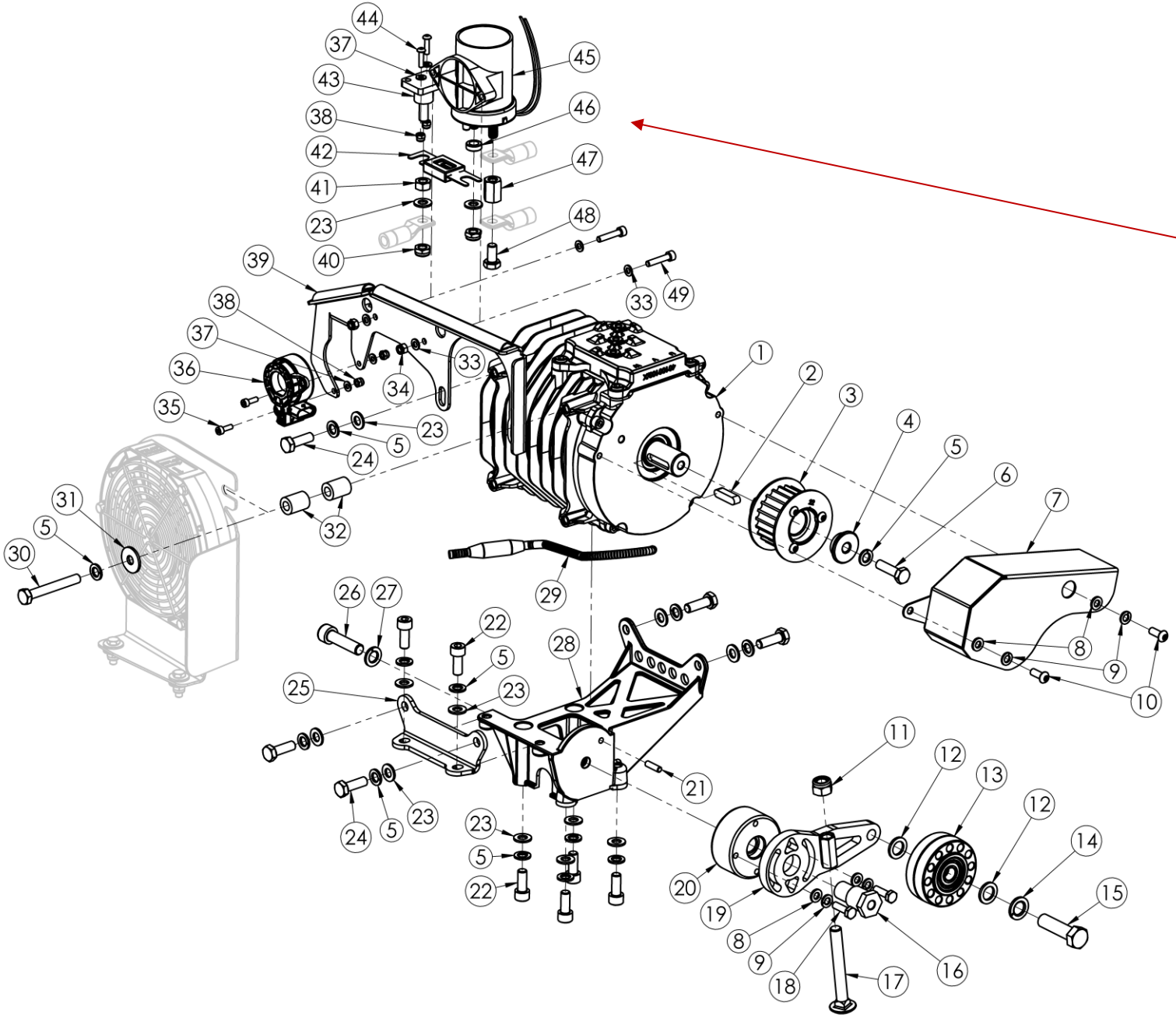

Contactor – Legacy <2025

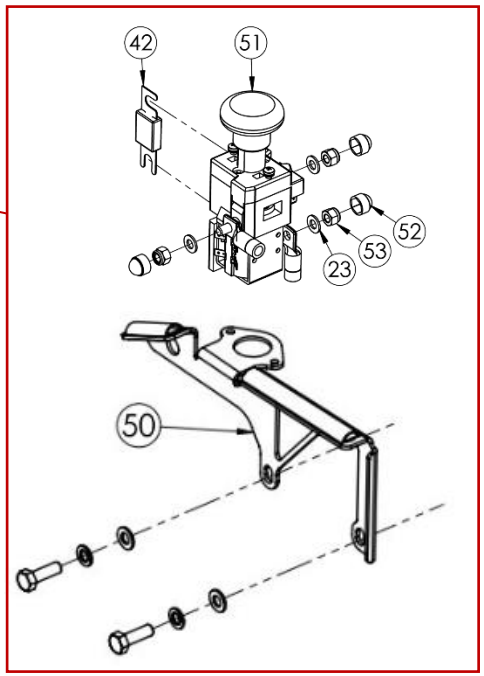

ASSIEME MOTORE DESTRO LINDE – RIGHT LINDE ENGINE ASSEMBLY

POS.	COD.	DESCRIZIONE	*DESCRIPTION*
34	AFN.02176	DADO M 5 AUTOBLOCK ALTO	*M5 HIGH SELF-LOCKING NUT*
35	AFN.00206	VITE M 4X 12 CILINDRICA 5931	*M 4X 12 SOCKET HEAD SCREW*
36	CE00265	SENSORE CORRENTE LEM X BATTERIA POWERPLAZA	*LEM CURRENT SENSOR*
37	AFN.02445	RONDELLA 4,5-12X1,5	*WASHER 4,5-12X1,5*
38	AFN.00701	DADO M 4 AUTOBLOCK ALTO	*M4 HIGH SELF-LOCKING NUT*
39	SZ0.04655	SUPPORTO CARENA LATERALE BASCULANTE CE FE DX	*CE RIGHT SIDE FAIRING MOUNT TUBE*
40	AFN.00160	DADO M 8 AUTOBLOCK BASSO	*NUT M8 LOW SELF-LOCKING*
41	AFN.0049D	DADO M 8 DX	*NUT M8*
42	CE00216	FUSIBILE CERAMICA 355 A	*355A CERAMIC FUSE*
43	CE00189	KLEMMA M8 (PERNO DI DERIVAZIONE)	*M8 ISOLATION BOT*
44	TBO.04X016	VITE M 4X 16 BOMBATA 7380	*M4X16 BUTTON HEAD SCREW*
45	AFS.06056	CONTACTOR HV 200A DH - NO COIL ENERGIZER	*CONTACTOR HV 200A DH - NO COIL ENERGIZER*
46	FBN.00252	SPESSORE 8,5-14X 5 BARRETTA	*ROD SPACER 8,5-14X5 TRACK ROD*
47	SZ0.E0219	DISTANZIALE M8X20	*M8X20 SPACER*
48	AFN.04325	VITE M 8X 16 ESAGONALE ZINC.5739	*M8X16 HEXAGONAL HEAD SCREW*
49	TCI.05X025	VITE M 5X 25 CILINDRICA 5931	*M 5X 25 SOCKET HEAD SCREW*
50	SZ0.0465502	SUPPORTO CARENA LATERALE BASCULANTE CE FE DX	*CE RIGHT SIDE FAIRING MOUNT TUBE*
51	CE00168	CONTACTOR SD300-19 (PULSANTE EMERGENZA)	*ALBRIGHT CONTACTOR SD 300*
52	CE00289	TAPPO PROTEZIONE VITE M8	*PROTECTION CUP FOR M8 SCREW*
53	AFN.00128	DADO M 8 AUTOBLOCK ALTO	*NUT M8 HIGH SELF-LOCKING*

ASSIEME VENTOLA DI RAFFREDDAMENTO – COOLING FAN ASSEMBLY

LEFT

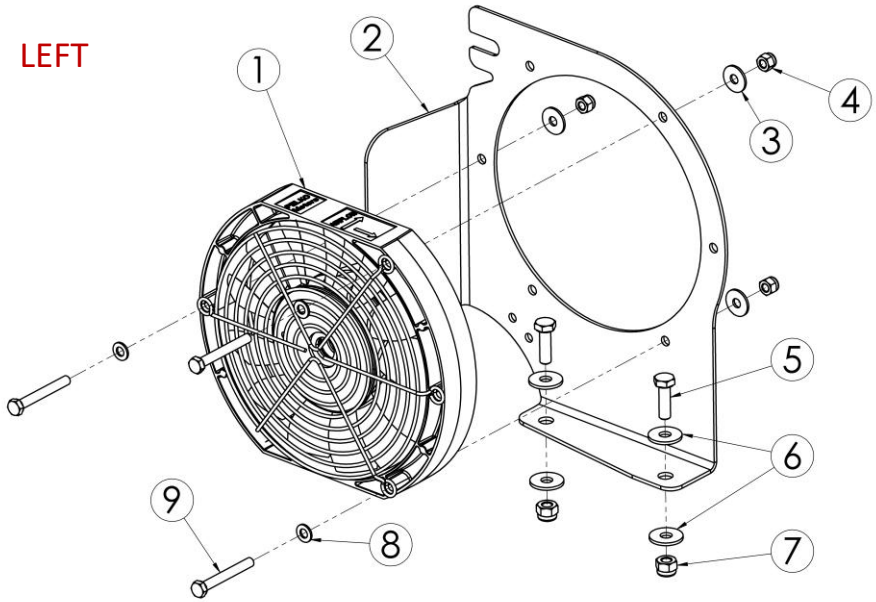

RIGHT

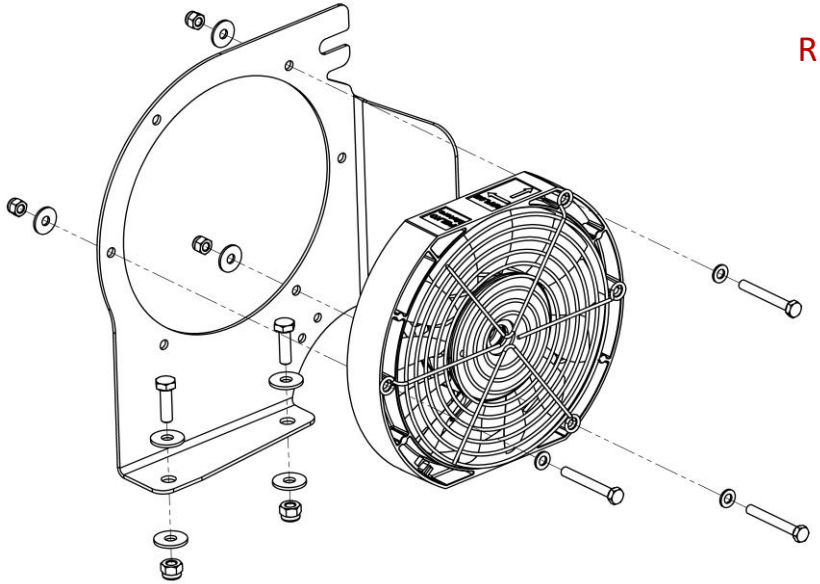

>2025

LEFT

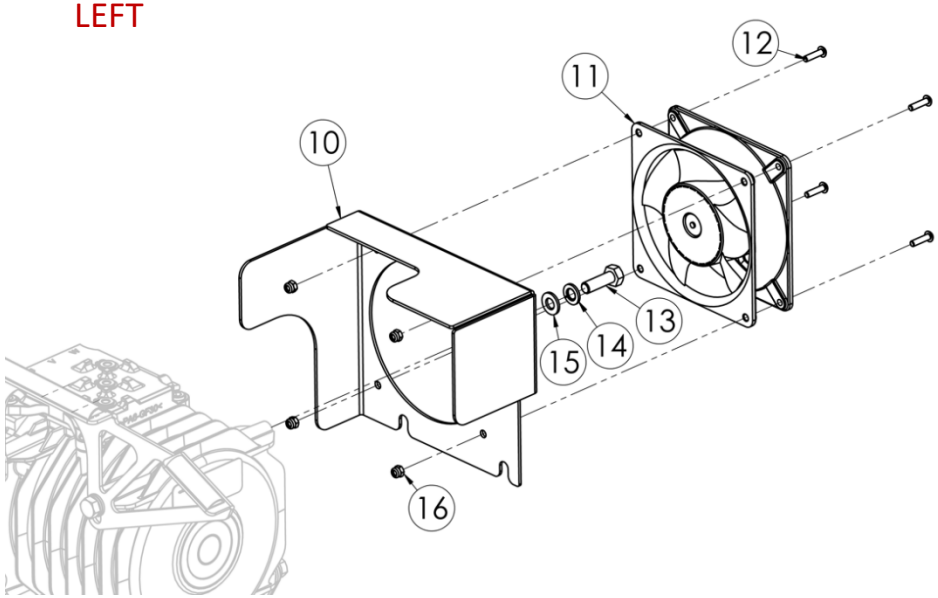

RIGHT

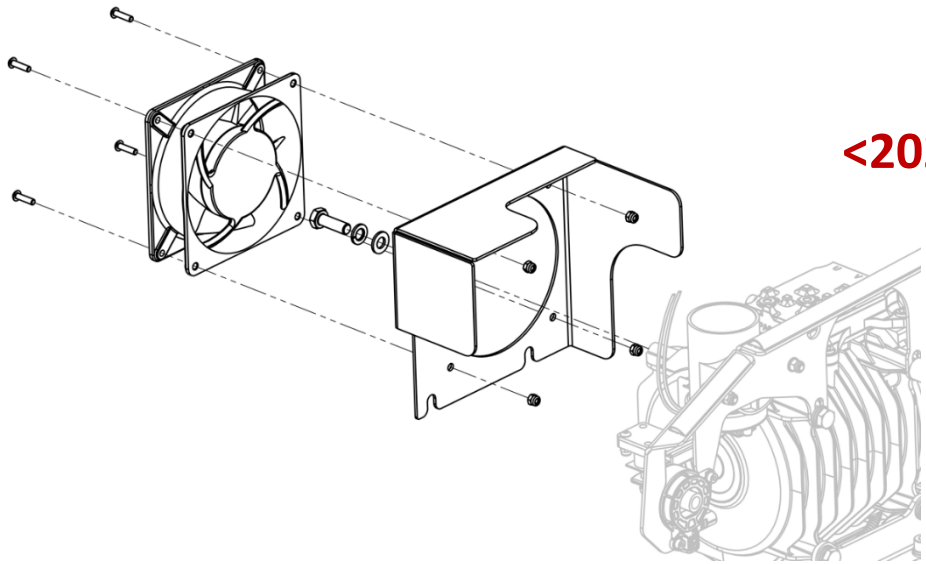

<2025

ASSIEME VENTOLA DI RAFFREDDAMENTO – COOLING FAN ASSEMBLY

POS.	COD.	DESCRIZIONE	*DESCRIPTION*
1	AFS.05706	VENTOLA DI RAFFREDDAMENTO 48V Ø150 CE	*COOLING FAN 48V Ø150 CE*
2	AML.6083S04 AML.6083D04	SUPPORTO VENTOLA 150MM CE SX SUPPORTO VENTOLA 150MM CE DX	*LEFT FAN BRACKET 150 MM CE* *RIGHT FAN BRACKET 150 MM CE*
3	AFN.00361	RONDELLA 5,5-15X1,5	*WASHER 5,5-15X1,5*
4	AFN.02176	DADO M 5 AUTOBLOCK ALTO	*M5 HIGH SELF-LOCKING NUT*
5	AFN.00233	VITE M 6X 20 ESAGONALE 5739	*M6X20 HEXAGONAL HEAD SCREW*
6	AFN.00263	RONDELLA 6,5-18X1,6	*WASHER 6,5-18X1,6*
7	AFN.00264	DADO M 6 AUTOBLOCK ALTO	*NUT M6 HIGH SELF-LOCKING*
8	AFN.02264	RONDELLA 5,3-10X1	*WASHER 5,3-10X1*
9	AFN.06897	VITE M 5X 40 ESAGONALE 5739	*M 5X 40 HEXAGONAL HEAD SCREW*
10	SZ0.4842S SZ0.4842D	CONVOGLIATORE VENTOLA MOTORE CE SX CONVOGLIATORE VENTOLA MOTORE CE DX	*LEFT CE AIR DUCT* *RIGHT CE AIR DUCT*
11	CE00159	FAN (VENTILATORE) 48V-22W	*48V EBM CE FAN*
12	TBO.04X016	VITE M 4X 16 BOMBATA 7380	*M4X16 BUTTON HEAD SCREW*
13	AFN.00107	VITE M 8X 25 ESAGONALE 5739	*M 8X25 HEXAGONAL HEAD SCREW*
14	CE00108	RONDELLA ELASTICA SPACCATA GROWER M 8	*M8 GROWER WASHER*
15	AFN.00350	RONDELLA 8,5-16X1,5	*WASHER 8,5-16X1,5*
16	AFN.00701	DADO M 4 AUTOBLOCK ALTO	*M4 HIGH SELF-LOCKING NUT*

PEDALIERA E-DRENALINE – E-DRENALINE FOOTREST – **LEGACY <2025**

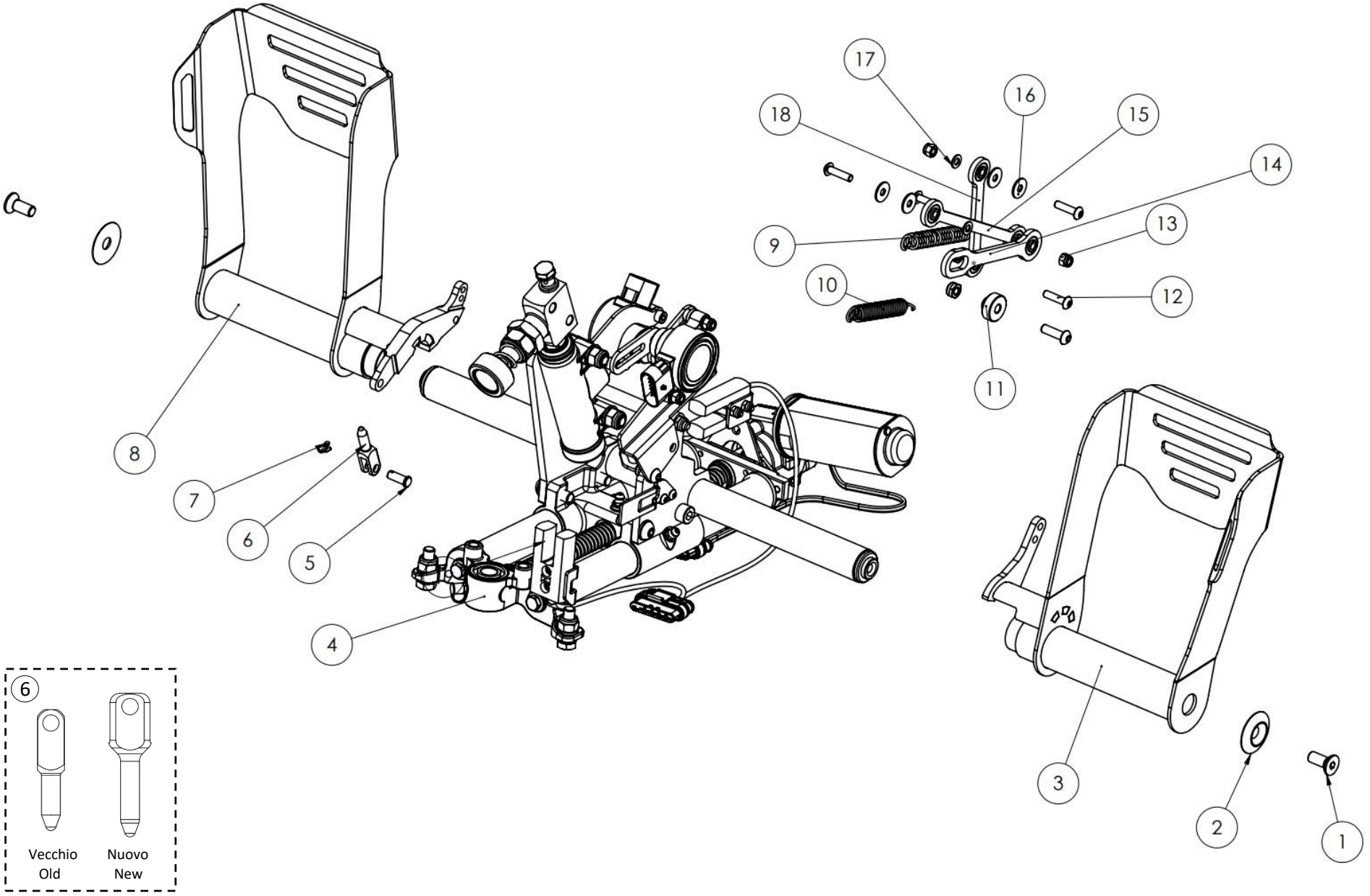

POS.	COD.	DESCRIZIONE	DESCRIPTION
1	AFN.00290	VITE M 8X20 SVASATA 5933	*M8X20 COUNTERSUNK HEAD SCREW*
2	FAN.00260	RONDELLA 8 SEDILE ALL.NERA	*ALUMINUM SEAT WASHER BLACK 8*
3	SC0.5204D	PEDALE CE 2020 GAS DX	*CENT E RIGHT PEDAL*
4	SL1.E002301	SUPPORTO TUBI POST. PEDALIERA CE	*REAR SLIDE SHAFT CARRIER*
5	SBN.00214	SPINA RIPARTITORE MM17,5	*DIVIDER PIN 17,5MM*
6	AFS.0586101	PUNTALE POMPA FRENI SP.6 CENT	*TOE MASTER CYLINDER SP.6 CENT*
7	AFN.00201	COPIGLIA	*MASTER CYLINDER SPLIT PIN*
8	SC0.5204S	PEDALE CE 2020 FRENO SX	*CENT E LEFT PEDAL*
9	SZ0.E0099	MOLLA PEDALE CE ACCELERATORE	*CE THROTTLE PEDAL SPRING*
10	SZ0.E0098	MOLLA PEDALE CE FRENO	*CE BRAKE PEDAL SPRING*
11	SZ0.05649	DIST.BIELLA FERMO ACCEL. CE SP.6,2X9,8-13	*Ø6.2X9.8-13SPACER*
12	AFN.01525	VITE M 5X 16 BOMBATA 7380	*M5X16 CONVEX HEAD SCREW*
13	AFN.00360	DADO M 5 AUTOBLOCK BASSO	*NUT M 5 LOW SELF-LOCKING*
14	FK0.05648	BIELLA FERMO ACCELLERATORE CE COMP.	*CE THROTTLE STOPPER ROD*
15	FK0.04527	BIELLA SENSORE PEDALE GAS COMPLETA CE	*CE ACCELERATOR SENSOR STOPPER ROD*
16	AFN.05826	RONDELLA 5,3-20X1,5	*WASHER 5,3-20X1,5*
17	AFN.02264	RONDELLA 5,3-10X1	*WASHER 5,3-10X1*
18	FK0.04528	BIELLA SENSORE PEDALE FRENO COMPLETA CE	*CE BRAKE STOPPER ROD*

PEDALIERA E-DRENALINE – E-DRENALINE FOOTREST

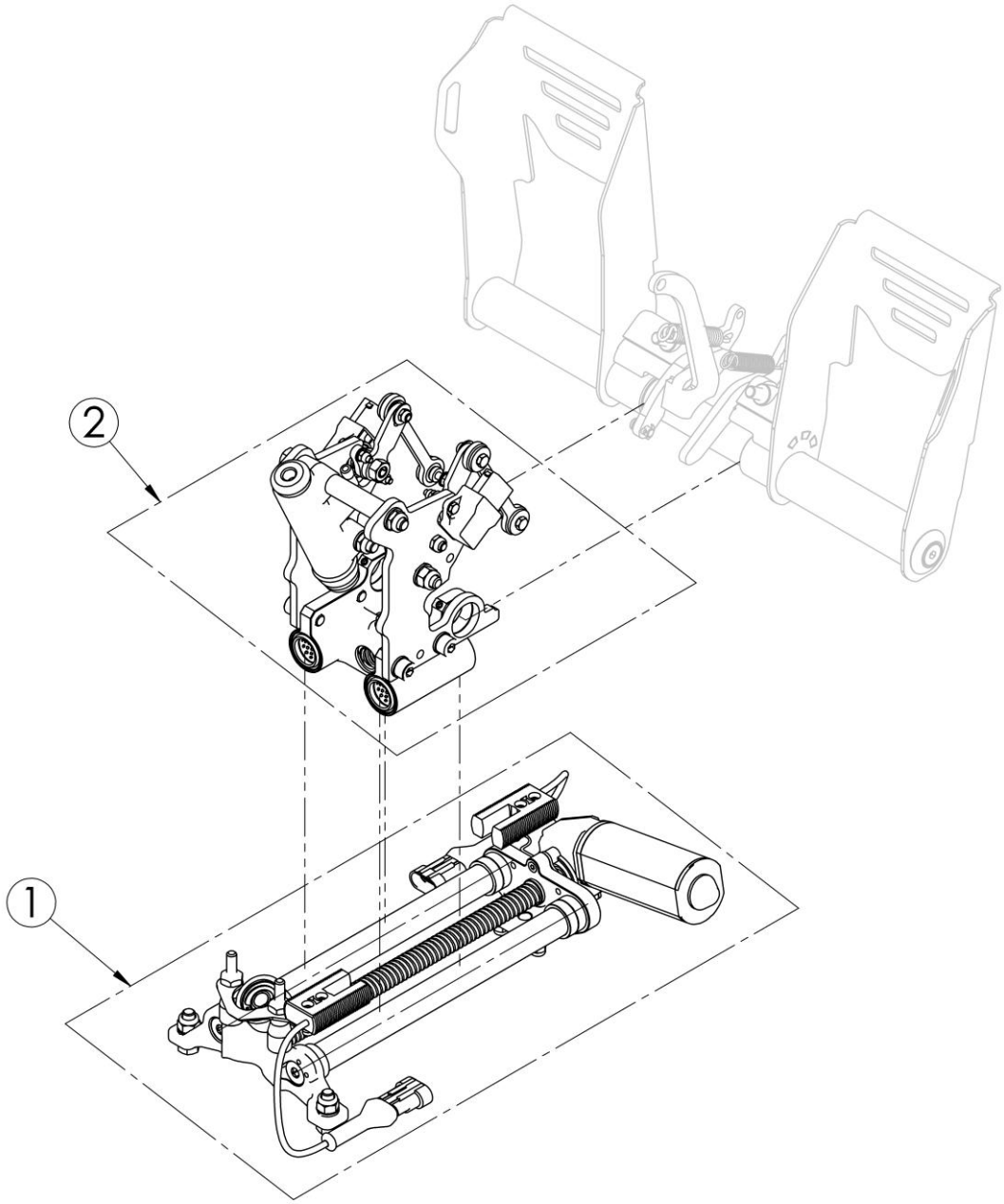

POS.	COD.	DESCRIZIONE	*DESCRIPTION*
1	FM0.07151	GUIDE COMPLETE PEDALIERA CE 2.0	*COMPLETE FOOTREST SLIDERS*
2	FM0.E0019	CARRELLO PEDALE CE	*PEDAL SLIDER CE*

PEDALI E-DRENALINE – E-DRENALINE PEDALS - **LEGACY <2025**

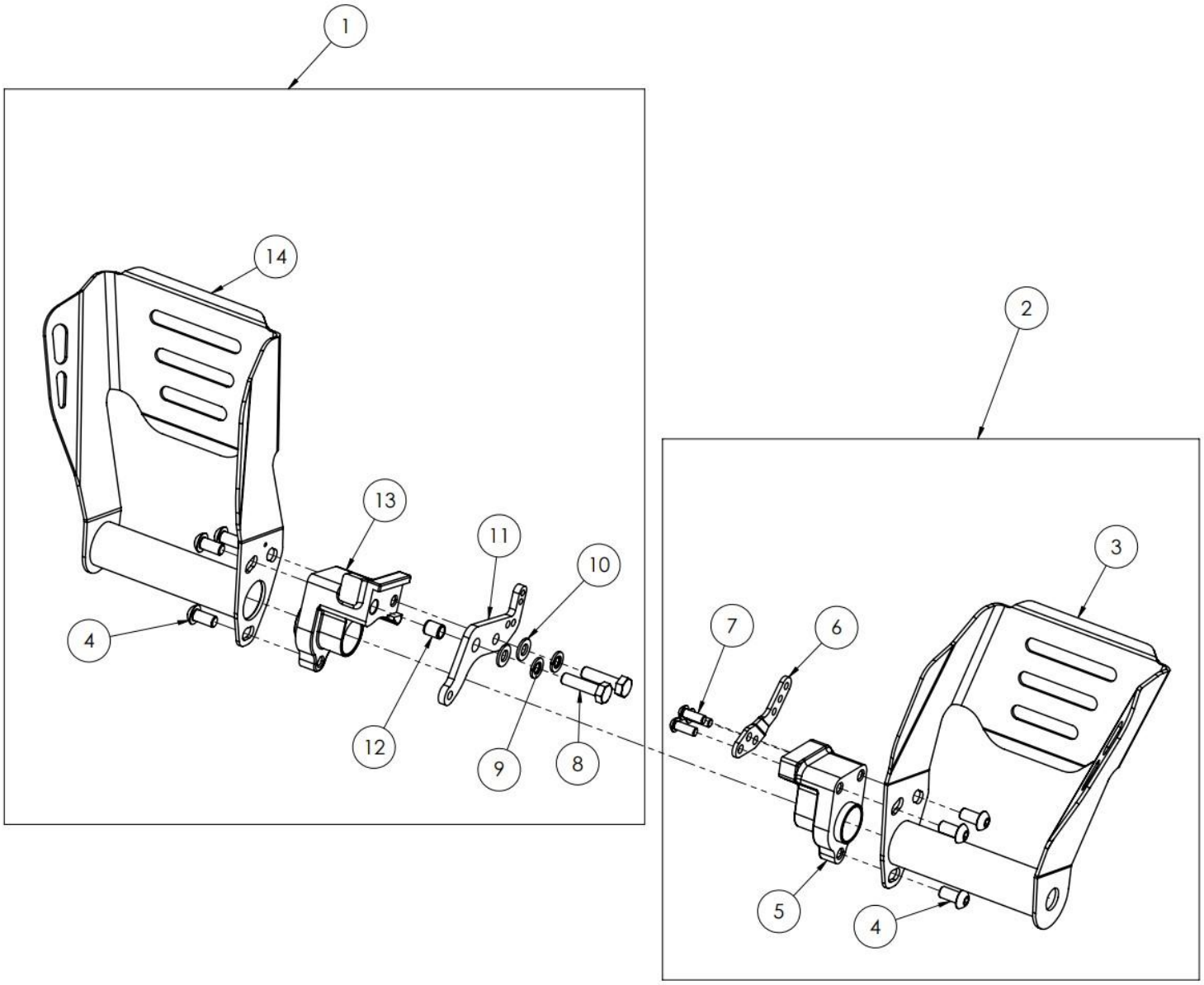

POS.	COD.	DESCRIZIONE	*DESCRIPTION*
1	SC0.5204S	PEDALE CE 2020 FRENO SX	*CENT E LEFT PEDAL*
2	SC0.5204D	PEDALE CE 2020 GAS DX	*CENT E RIGHT PEDAL*
4	AFN.05663	VITE M 5X 20 BOMBATA 7380	M 5X 20 CONVEX HEAD SCREW
5	CE00214	BLOCCO PEDALE GAS CE FORGIATO	GAS PEDAL STOPPER
6	SZ0.E1098	SUPPORTO ACC.PEDALE DX CE	*RIGHT PLATE THROTTLE PEDAL*
7	AFN.00502	VITE M 6X 16 BOMBATA 7380	M 6X16 CONVEX HEAD SCREW
8	AFN.04180	VITE M12X 45 ESAGONALE 5739 ZNC	M12X45 HEX SCREW
9	CE00108	RONDELLA ELASTICA SPACCATA GROWER M 8	M8 GROWER WASHER
10	AFN.00350	RONDELLA 8,5-16X1,5	WASHER 8,5-16X1,5
11	SZ0.E1126	PIASTRA SX PEDALE FRENO IBRIDO CE	HYBRID BRAKE PEDAL LF PLATE CE
12	A90.0213311	BOCCOLA 8-10X10 CENTRAGGIO CILINDRO PROD. INTERNA	*SPACER 8-10X10 FOR CYLINDER*
13	CE00215	BLOCCO PEDALE FRENO CE FORGIATO	*CE BRAKE PEDAL STOPPER*

PEDALI E-DRENALINE – E-DRENALINE PEDALS

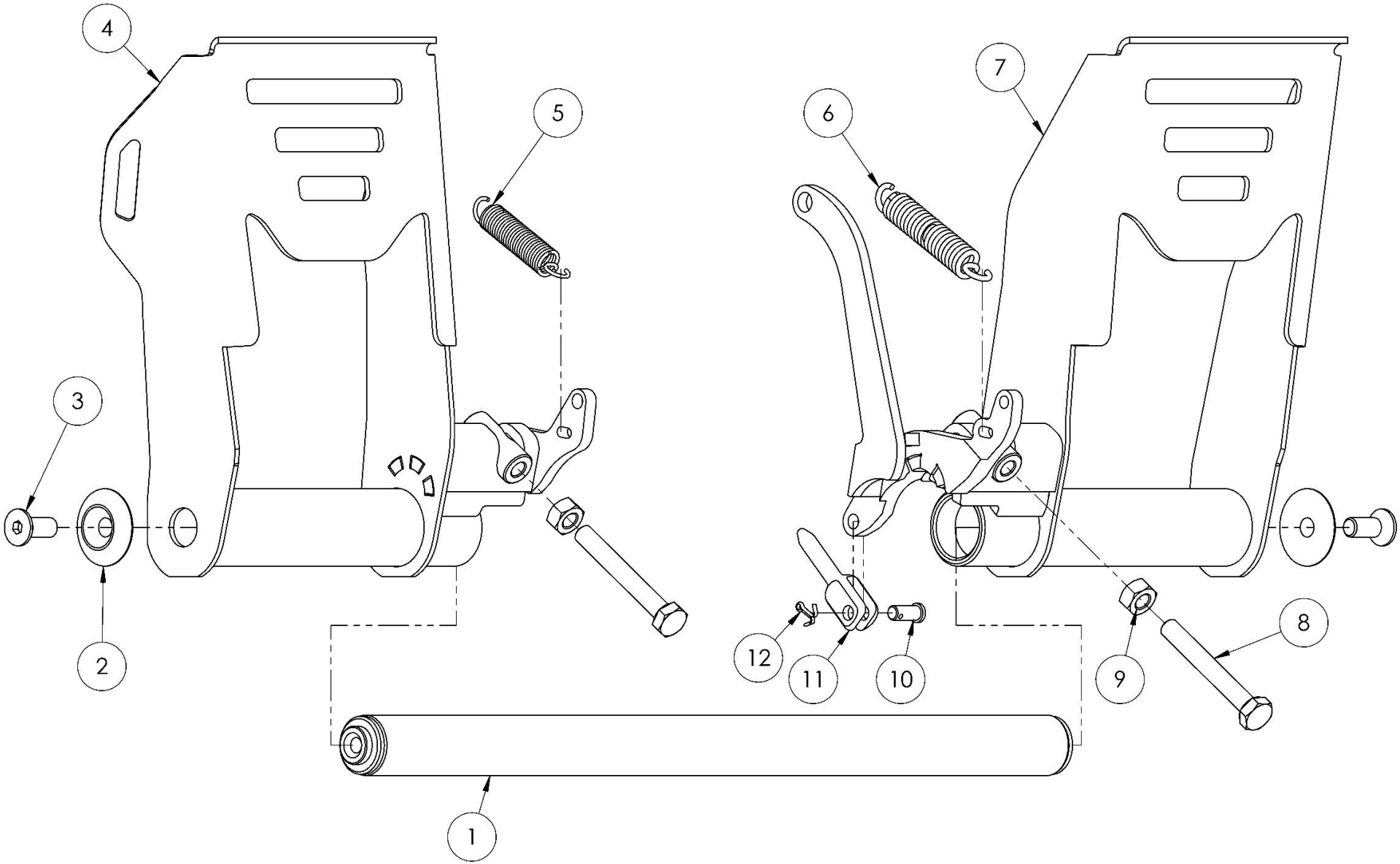

POS.	COD.	DESCRIZIONE	*DESCRIPTION*
1	SC0.E0062	ASSE PEDALE CENT/CE	*CENT/CE FOOTREST AXIS*
2	FAN.00260	RONDELLA 8 SEDILE ALL.NERA	*ALUMINUM SEAT WASHER BLACK 8*
3	AFN.00290	VITE M 8X20 SVASATA 5933	*M8X20 COUNTERSUNK HEAD SCREW*
4	SC0.6797D	PEDALE CENT/CE 2024 GAS DX	*GAS PEDAL CENT/CE*
5	SZ0.02203	MOLLA PEDALE CENT GAS	*PEDAL SPRING GAS/EXHAUST CENT*
6	SZ0.02204	MOLLA PEDALE CENT FRENO	*PEDAL SPRING BRAKE CENT*
7	SC0.6797S	PEDALE CENT/CE 2024 FRENO SX	*BRAKE PEDAL CENT/CE*
8	AFN.02291	VITE M 8X 60 ESAGONALE 5739	*M 8X 60 HEXAGONAL HEAD SCREW*
9	AFN.0049D	DADO M 8 DX	*NUT M8*
10	SBN.00214	SPINA RIPARTITORE MM17,5	DIVIDER PIN 17,5MM
11	AFS.0586101	PUNTALE POMPA FRENI SP.6 CENT	*TOE MASTER CYLINDER SP.6 CENT*
12	AFN.00201	COPIGLIA	*MASTER CYLINDER SPLIT PIN*

CARRELLO PEDALE E-DRENALINE – E-DRENALINE PEDAL SLIDER – **LEGACY <2025**

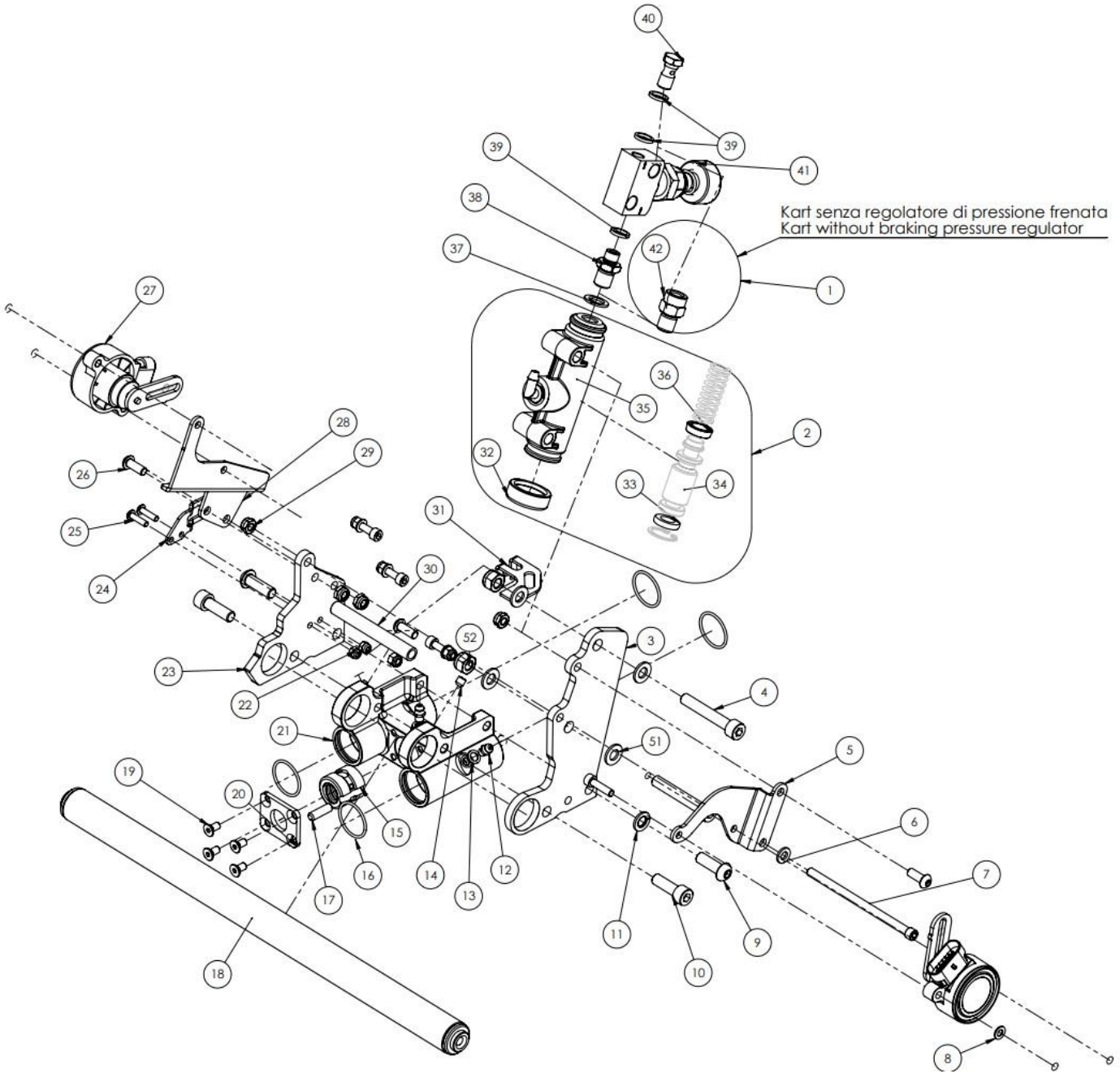

CARRELLO PEDALE E-DRENALINE – E-DRENALINE PEDAL SLIDER – **LEGACY <2025**

POS.	COD.	DESCRIZIONE	DESCRIPTION
1	CRG.05567	KIT REVISIONE POMPA FRENO D19 CENT 2024	*D19 CENTURION MASTER CYLINDER REBUILDING KIT*
2	FMN.02993	POMPA FRENO D19 CENTURION COMPLETA	*MASTER CYLINDER D19 COMPLETE CENT*
3	SZ0.E0798	PIASTRA SX PARTE CENTRALE CARRELLO CE	*CE FOOTREST LEFT PLATE*
4	AFN.00681	VITE M 8X 50 CILINDRICA 5931	*M8X50 HEX SOCKET SCREW*
5	SZ0.E1099	SUPPORTO ACC. MO450-A IBRIDO SX CE	*LEFT MO450 HALL SENSOR STAND*
6	AFN.00105	RONDELLA 6,5-12X1,5	*WASHER 6,5-12X1,5*
7	AFN.02290	VITE M 6X100 CILINDRICA 5931	*M6X100 HEX SOCKET SCREW*
8	AFN.02264	RONDELLA 5,3-10X1	*WASHER 5,3-10X1*
9	TBO.08X025	VITE M 8X 25 BOMBATA 7380	*M8X25 BUTTON HEAD SCREW*
10	AFN.00732	VITE M 8X 25 CILINDRICA 5931	*M 8X25 SOCKET HEAD SCREW*
11	CE00108	RONDELLA ELASTICA SPACCATA GROWER M 8	*M8 GROWER WASHER*
12	CE00112	INGRASSATORE M6 DIN 71412 FORMA A	*M6 DIN 71412 GREASER*
13	AFN.06156	RONDELLA 6,5-10X1 ACCIAIO INOX	*BRASS WASHER 6,5-10X1 INOX*
14	CE00111	GRANO M 6X 6 TESTA PIANA	*M6X6 SET SCREW*
15	SL1.04651	DADO 16X8 BRONZO PEDALIERA CE	*FOOTREST BRASS NUT*
16	CE00069	OR 25X2 CE	*OR 25X2*
17	CE00114	SPINA 6X20 CE	*D6X20 PIN*
18	SC0.E0062	ASSE PEDALE CE	*CE FOOTREST AXIS*
19	AFN.00711	VITE M 5X 10 SVASATA 5933	*M5X10 COUNTERSUNK HEAD SCREW*
20	SZ0.E1221	TAPPO DADO 16X4 CE	*16X4 BRONZE NUT CAP*
21	SZ0.E001903	PARTE CENTRALE CARRELLO CE	*FOOTREST SLIDER CE*
22	AFN.00701	DADO M 4 AUTOBLOCK ALTO	*M4 HIGH SELF-LOCKING NUT*
23	SZ0.05201	PIASTRA CENTRALE CARRELLO DX CE	*CE FOOTREST RIGHT PLATE*
24	SZ0.E1313	PUNTALE POSTERIORE 1405A CE	*CE FOOTREST REAR STOPPER 1405A*
25	TBO.04X016	VITE M 4X 16 BOMBATA 7380	*M4X16 BUTTON HEAD SCREW*
26	AFN.00502	VITE M 6X 16 BOMBATA 7380	*M 6X16 CONVEX HEAD SCREW*
27	CE00116	POTENZIOMETRO MO450-A	*MO450-A HALL SENSOR*
28	SZ0.E1100	SUPPORTO ACC. MO450-A CE	*RIGHT MO450 HALL SENSOR STAND*
29	AFN.02639	GRANO M 6X20 TESTA PIANA	*M6X20 GRUB SCREW*
30	SZ0.02303	DISTANZIALE PEDALIERA CENT ZINC	*CENT FOOTREST SPACER*

CARRELLO PEDALE E-DRENALINE – E-DRENALINE PEDAL SLIDER – **LEGACY <2025**

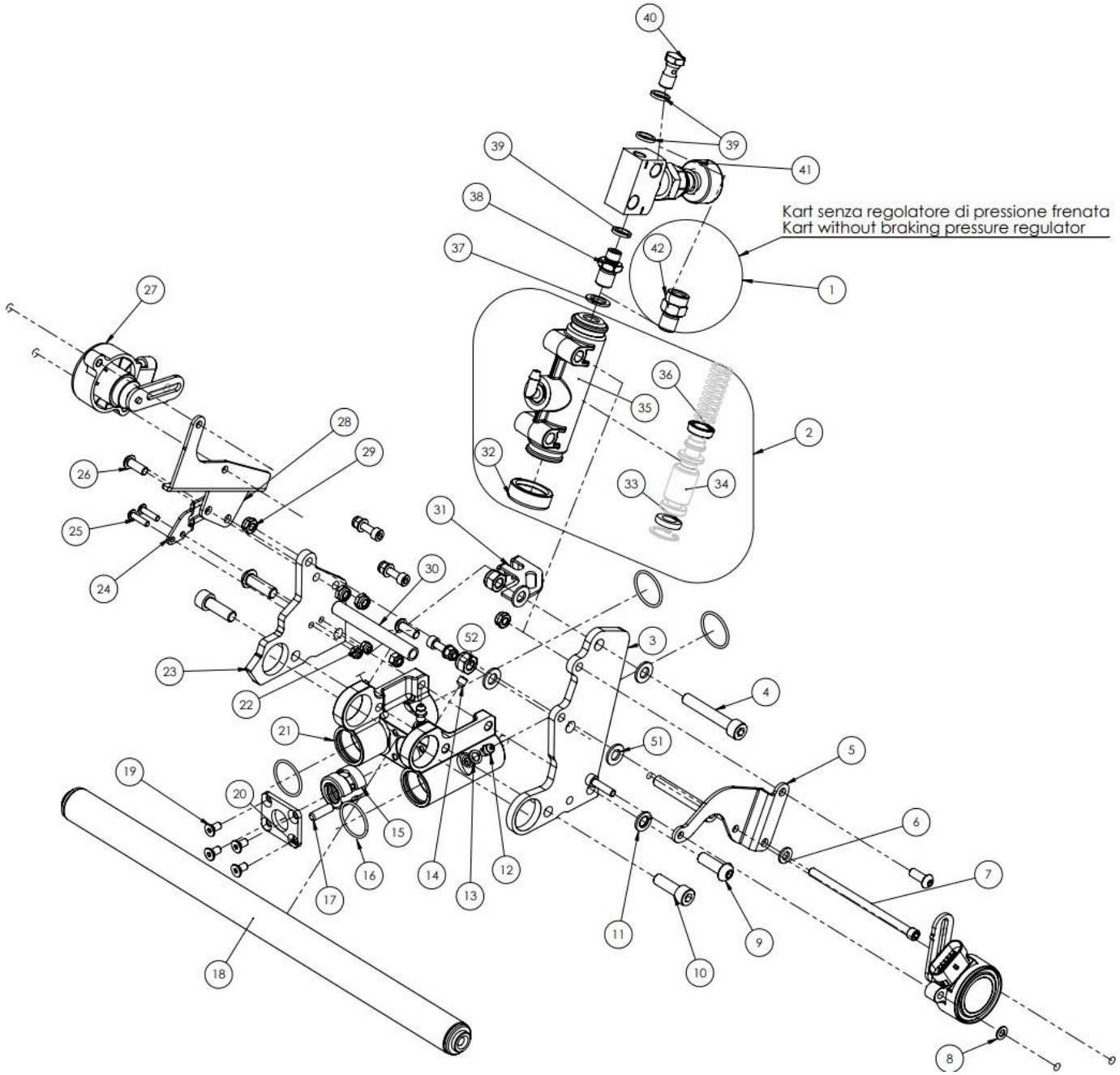

POS.	COD.	DESCRIZIONE	DESCRIPTION
31	SZ0.E1312	PUNTALE ANTERIORE 1405A CE	*CE FOOTREST FRONT STOPPER 1405A*
37	AFN.03545	RONDELLA 12 -18X1,5 RAME CENTURION	*MASTER CYLINDER WASHER 12X18X1.5*
38	SZ0.05500	RIDUZIONE POMPA FRENO M12X1,5 - G1/8	*MASTER CYLINDER ADAPTER M12X1.5 - G1/8*
39	AFN.05870	RONDELLA 10 -16X2 RAME	*COPPER WASHER 10 -16X2*
40	SZ0.00185	RACCORDO M10 V11	*FITTING M10 V11*
41	AFS.05506	REGOLATORE PRESSIONE FRENATA	*BRAKE PRESSURE REGULATOR*

CARRELLO PEDALE E-DRENALINE – PEDAL SLIDER E-DRENALINE

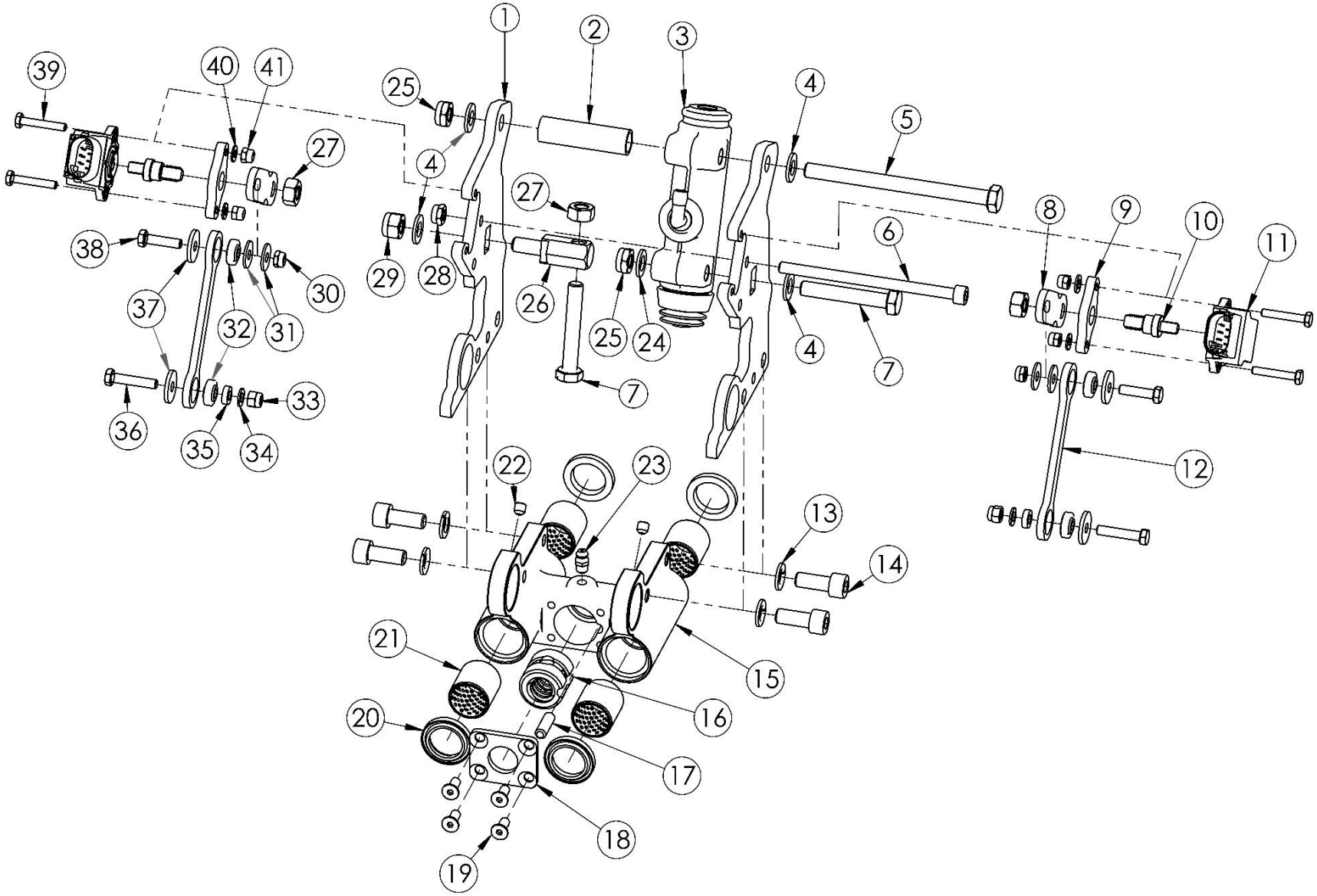

CARRELLO PEDALE E-DRENALINE – PEDAL SLIDER E-DRENALINE

POS.	COD.	DESCRIZIONE	DESCRIPTION
1	SZ0.06805	PIASTRA PEDALI PEDALIERA CENT	FOOTREST PEDAL PLATE
2	SZ0.06811	TUBETTO FERMO PIASTRE PEDALIERA CENT	FOOTREST PLATES SPACER
3	FMN.02993	POMPA FRENO D19 CENTURION COMPLETA	MASTER CYLINDER D19 COMPLETE CENT
4	AFN.00350	RONDELLA 8,5-16X1,5	WASHER 8,5-16X1,5
5	AFN.06745	VITE M 8X105 ESAGONALE 5739 META' FILETTO	M 8X105 HEXAGONAL HEAD SCREW
6	AFN.02290	VITE M 6X100 CILINDRICA 5931	M6X100 HEX SOCKET SCREW
7	AFN.00443	VITE M 8X 50 ESAGONALE 5739	M 8X50 HEXAGONAL HEAD SCREW
8	SZ0.06806	LEVA SENSORE PEDALIERA CENT	FOOTREST SENSOR LEVER CENT
9	SZ0.06807	PIASTRINA GUIDA PEDALIERA CENT	FOOTREST GUIDE PLATE CENT
10	SZ0.06808	PERNO SENSORE PEDALIERA CENT	FOOTREST SENSOR PIN CENT
11	AFS.05096	SENSORE ROTATIVO MECCANICO RSC-3202	ANGLE SENSOR RSC-3202
12	SZ0.04528	BIELLA SENSORE PEDALE FRENO 76 CE	FOOTREST SENSOR LINKAGE BRAKE 76 CE
13	CE00108	RONDELLA ELASTICA SPACCATA GROWER M 8	M8 GROWER WASHER
14	AFN.02545	VITE M 8X 20 CILINDRICA 5931	M 8X 20 SOCKET HEAD SCREW
15	SZ0.E001903	PARTE CENTRALE CARRELLO CE ALL.	FOOTREST SLIDER CE
16	SL1.04651	DADO 16X8 BRONZO PEDALIERA CE	FOOTREST BRASS NUT
17	CE00114	SPINA 6X20 CE	D6X20 PIN
18	SZ0.E1221	TAPPO DADO 16X4 CE	16X4 BRONZE NUT CAP
19	AFN.04388	VITE M 5X 12 SVASATA 5933	M 5X 12 COUNTERSUNK HEAD SCREW
20	AFS.06082	RASCHIATORE METALLICO DG 20X28X4	BUSHING 25X25 PTC 2025 RK DJA MOND
21	AFS.06078	BRONZINA 20X25 PTC 2025 RK DJA MOND	BUSHING 25X25 PTC 2025 RK DJA MOND
22	CE00111	GRANO M 6X 6 TESTA PIANA	M6X6 SET SCREW
23	CE00112	INGRASSATORE M6 DIN 71412 FORMA A	M6 DIN 71412 GREASER
24	AFN.00287	RONDELLA 8,5-14X1,5	WASHER 8,5-14X1,5
25	AFN.00160	DADO M 8 AUTOBLOCK BASSO	NUT M8 LOW SELF-LOCKING
26	SZ0.02727	REGISTRO FILO M8 CENTURION	CABLE ADJUSTER M8 CENT
27	AFN.0049D	DADO M 8 DX	NUT M8
28	AFN.00106	DADO M 6 AUTOBLOCK BASSO	NUT M6 LOW SELF-LOCKING
29	AFN.00128	DADO M 8 AUTOBLOCK ALTO	NUT M8 HIGH SELF-LOCKING
30	AFN.00360	DADO M 5 AUTOBLOCK BASSO	NUT M 5 LOW SELF-LOCKING
31	AFN.00361	RONDELLA 5,5-15X1,5	WASHER 5,5-15X1,5

CARRELLO PEDALE E-DRENALINE – PEDAL SLIDER E-DRENALINE

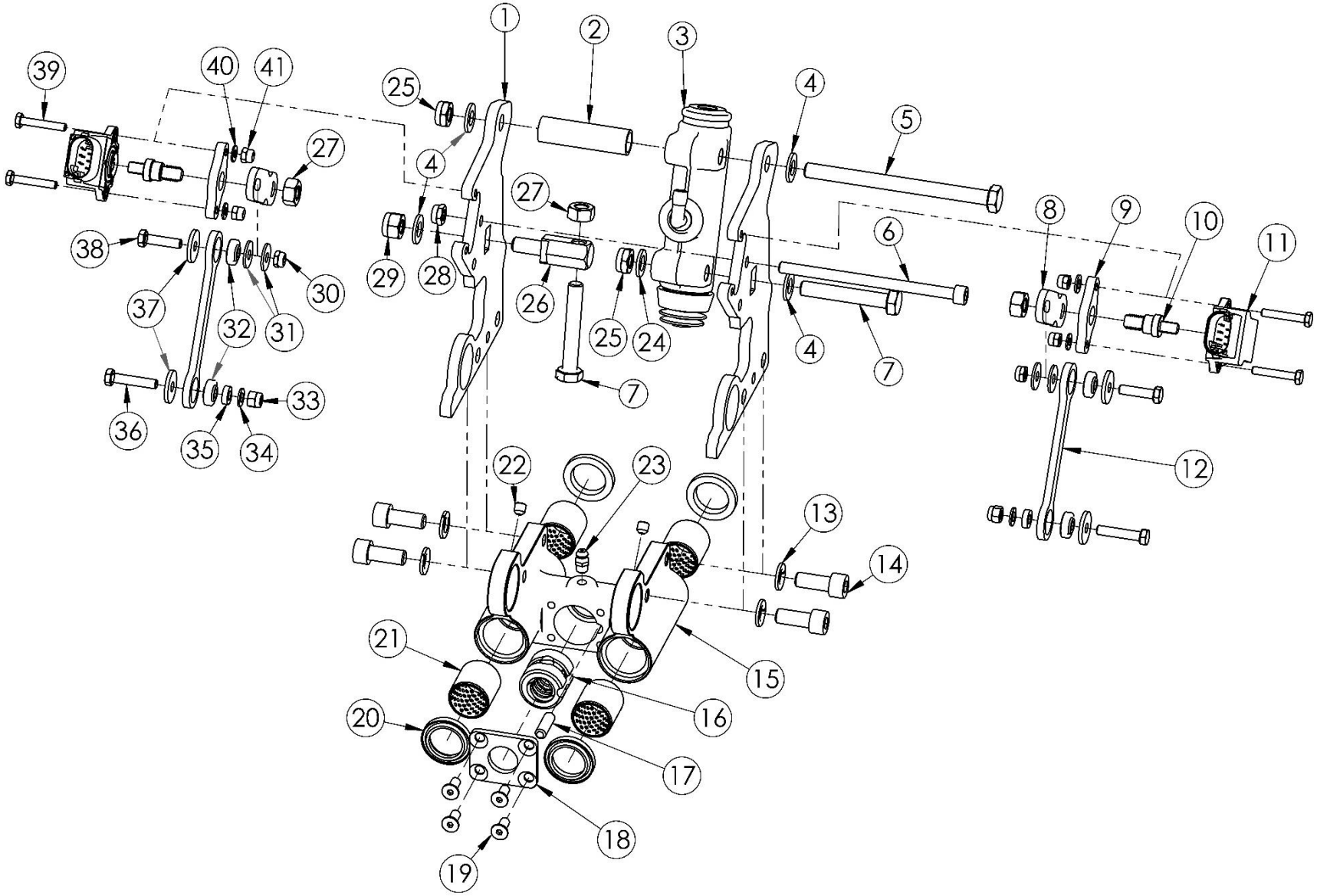

POS.	COD.	DESCRIZIONE	DESCRIPTION
32	AFN.04564	SNODO SFERICO GE5C PER BIELLETTE SENSORI CE	SPHERICAL BEARING GE5C FOR SENSOR LINKAGES CE
33	AFN.02176	DADO M 5 AUTOBLOCK ALTO	M5 HIGH SELF-LOCKING NUT
34	AFN.02264	RONDELLA 5,3-10X1	WASHER 5,3-10X1
35	AFN.04793	RONDELLA 5,2-10X3 NYLON	NYLON WASHER 5,2-10X3
36	AFN.06906	VITE M 5X 25 ESAGONALE 5739	M 5X 25 HEXAGONAL HEAD SCREW
37	AFN.05826	RONDELLA 5,3-20X1,5	WASHER 5,3-20X1,5
38	AFN.06905	VITE M 5X 20 ESAGONALE 5739	M 5X 20 HEXAGONAL HEAD SCREW
39	AFN.05570	VITE M 4X 25 ESAGONALE 5739	M 4X 25 HEXAGONAL HEAD SCREW
40	AFN.02445	RONDELLA 4,5-12X1,5	WASHER 4,5-12X1,5
41	AFN.00701	DADO M 4 AUTOBLOCK ALTO	M4 HIGH SELF-LOCKING NUT

GUIDA MOTORIZZATA PEDALIERA – MOTORIZED PEDAL SLIDER – **LEGACY <2025**

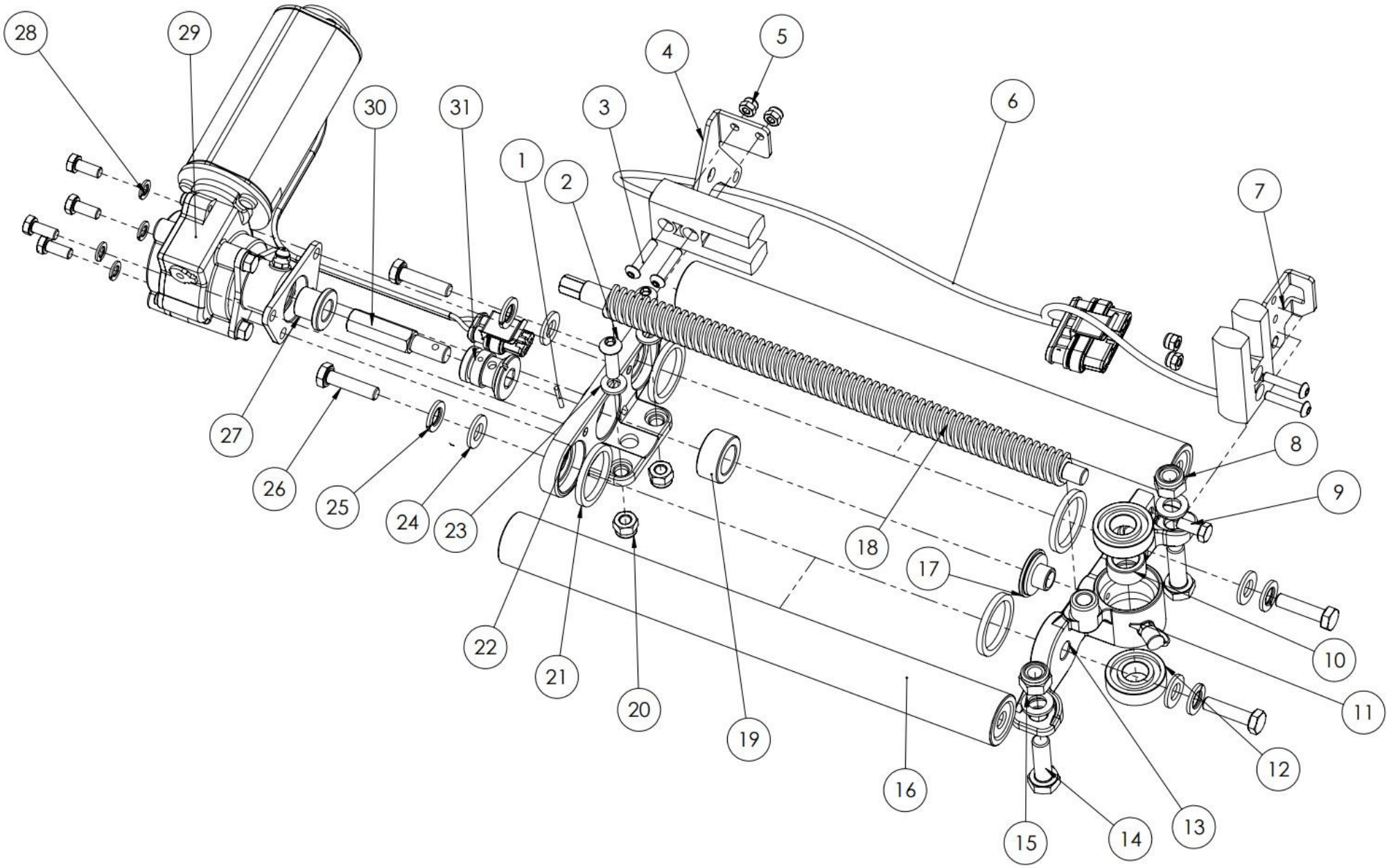

POS.	COD.	DESCRIZIONE	*DESCRIPTION*
1	AFS.05315	SPINA CILINDRICA RETTIFICATA Ø3X16	*CYLINDRICAL SPIN D3X16*
2	AFN.02144	VITE M 6X 20 BOMBATA 7380	*M6X20 BUTTON HEAD SCREW*
3	AFN.02543	VITE M 4X 20 BOMBATA 7380 ZINCATA	*M4X20 CONVEX HEAD SCREW*
4	SZ0.E1311	SUPPORTO BLOCCO 1405A CE	*FRONT PEDAL SWITCH STAND*
5	AFN.00360	DADO M 5 AUTOBLOCK BASSO	*NUT M 5 LOW SELF-LOCKING*
6	CE00230	CABLAGGIO PEDALIERA	*FOOTREST WIRING HARNESS*
7	SZ0.E1311	SUPPORTO BLOCCO 1405A CE	*FRONT PEDAL SWITCH STAND*
8	AFN.00128	DADO M 8 AUTOBLOCK ALTO	*NUT M8 HIGH SELF-LOCKING*
9	CE00107	VITE M 5X 12 ESAGONALE 5739	*M5X12 HEX SCREW*
10	SZ0.E0061	DISTANZIALE BUSSOLA PIANTONE CE	*STEERING SHAFT BEARING SPACER*
12	AFS.03338.2RS	CUSCINETTO 6001 Ø12 2RS	*BEARING 6001 STUB AXLE BOLT 2RS*
13	SL1.E002301	SUPPORTO TUBI POST. PEDALIERA CE	*REAR SLIDE SHAFT CARRIER*
14	AFN.03516	VITE M 8X 25 ESAGONALE 10.9	*M 8X25 HEX SCREW*
15	AFN.00287	RONDELLA 8,5-14X1,5	*WASHER 8,5-14X1,5*
16	SC0.02591	PERNO TUBOLARE Ø20X258 M8 CENT	*CENT CHROME TUBE 20X258*
17	CE00025	BUSSOLA 8X11 BRONZO CE	*8X11 BRONZE BUSHING*
18	CE00028	VITE SENZA FINE D 16X4	*D16X4 FOOTREST SLIDE ENDLESS SCREW*
19	CE00026	BUSSOLA 14X23 BRONZO CE	*14X23 BRONZE BUSHING*
20	AFN.00264	DADO M 6 AUTOBLOCK ALTO	*NUT M6 HIGH SELF-LOCKING*
21	AFS.03166	GOMMINO PINZA ANTERIORE Ø24 V10	*PISTON SEAL V10 24 FRONT*
22	SL1.E002001	SUPPORTO TUBI ANT. PEDALIERA CE	*FRONT SLIDE SHAFT CARRIER*
23	AFN.00105	RONDELLA 6,5-12X1,5	*WASHER 6,5-12X1,5*
24	AFN.00350	RONDELLA 8,5-16X1,5	*WASHER 8,5-16X1,5*
25	CE00108	RONDELLA ELASTICA SPACCATA GROWER M 8	*M8 GROWER WASHER*
26	AFN.05530	VITE M 6X 25 ESAGONALE 5739	*M6X25 HEXAGONAL SCREW*
27	CE00029	BUSSOLA 10X14 CE	*10X14 BUSHING*
28	CE00110	RONDELLA ELASTICA SPACCATA GROWER M 5	*M5 GROWER WASHER*
29	FM0.E0118	MOTORE + SUPPORTO MOTORE PEDALIERA 0225	*FOOTREST 48V MOTOR ASSY*
30	SZ0.04870	ALBERO MOTORE PEDALIERA ESAGONALE 48V CE	*FOOTREST 48V HEXAGONAL SCREW*
31	SZ0.E0058	BUSSOLA ESAGONALE 8 CE	*FOOTREST MOTOR TRASMISSION GEAR*

GUIDA MOTORIZZATA PEDALIERA – MOTORIZED PEDAL SLIDER

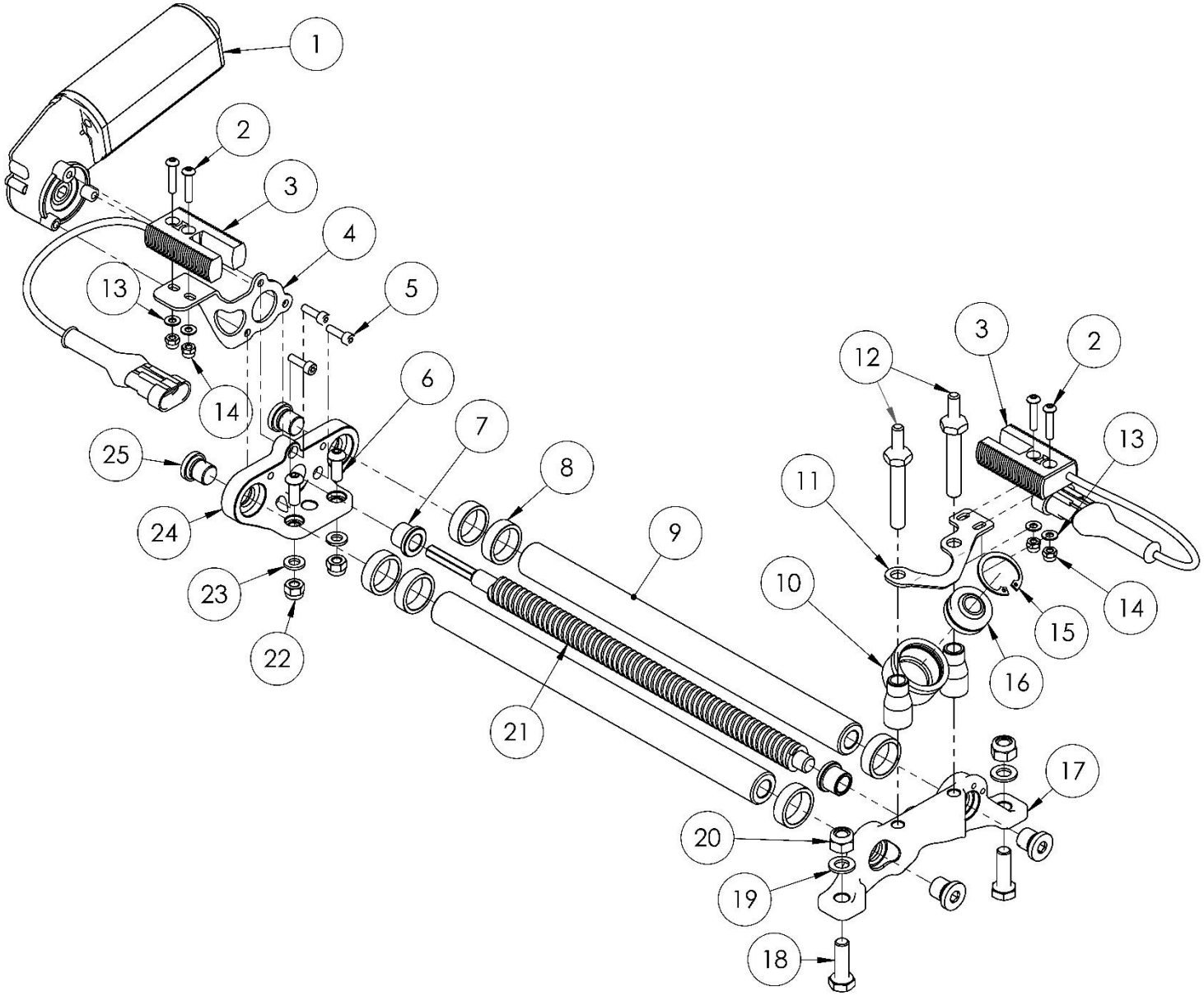

POS.	COD.	DESCRIZIONE	DESCRIPTION
1	AFS.04875	MOTORINO PEDALIERA 48V 300RPM	*FOOTREST MOTOR 48V 300RPM*
2	AFN.02543	VITE M 4X 20 BOMBATA 7380 ZINCATA	*M4X20 CONVEX HEAD SCREW*
3	FL1.E0120	INTERRUTTORE MAGNETICO PEDALIERA CABLATO	*WIRED FOOTREST MAGNETIC SWITCH*
4	SZ0.E1311	SUPPORTO BLOCCO 1405A CE	*FRONT PEDAL SWITCH STAND*
5	AFN.06383	VITE M 4X 14 CILINDRICA 5931	*M 4X 14 SOCKET HEAD SCREW*
6	AFN.00502	VITE M 6X 16 BOMBATA 7380	*M 6X16 CONVEX HEAD SCREW*
7	AFS.06079	BRONZINA A CAPPELLO BZ 10X14X18X3X10	*FLANGED BUSHING 10X14X18X3X10*
8	AFN.06309	DISTANZIALE H-ECOPUR PEDALIERA CE 20X25X7,5	*H-ECOPUR FOOTREST SPACER*
9	SC0.02591	PERNO TUBOLARE Ø20X258 M8 CENT	*CENT CHROME TUBE 20X258*
10	SZ0.06499	COLONNETTA STERZO DIRETTO CE Ø16X8,5X29	*DIRECT STEERING PILLAR CE Ø16X8,*
11	SZ0.06302	SUPPORTO POSTERIORE INTERRUTORI MAGNETICI CE	*MAGNETIC SWITCH REAR BRACKET*
12	SZ0.06500	PERNO COLONNETTA STERZO DIRETTO CE	*DIRECT STEERING PILLAR PIN*
13	AFN.02445	RONDELLA 4,5-12X1,5	*WASHER 4,5-12X1,5*
14	AFN.00701	DADO M 4 AUTOBLOCK ALTO	*M4 HIGH SELF-LOCKING NUT*
15	AFN.06482	SEEGER PER FORI Ø26MM SP.1,5 UTILIZZI PESANTI	*INTERNAL SEEGER Ø26X1,5*
16	AFN.02198	UNIBALL PIANTONE Ø10 NOLEGGIO	*STEERING COULMN BALL DMSB*
17	SL1.E002301	SUPPORTO TUBI POST. PEDALIERA CE	
18	AFN.00107	VITE M 8X 25 ESAGONALE 5739	*M 8X25 HEXAGONAL HEAD SCREW*
19	AFN.00287	RONDELLA 8,5-14X1,5	*WASHER 8,5-14X1,5*
20	AFN.00128	DADO M 8 AUTOBLOCK ALTO	*NUT M8 HIGH SELF-LOCKING*
21	SL1.0465001	VITE SENZA FINE D 16X8	
22	AFN.00264	DADO M 6 AUTOBLOCK ALTO	*NUT M6 HIGH SELF-LOCKING*
23	AFN.00105	RONDELLA 6,5-12X1,5	*WASHER 6,5-12X1,5*
24	SL1.E002001	SUPPORTO TUBI ANT. PEDALIERA CE	*FRONT SLIDE SHAFT CARRIER*
25	AFS.06287	TAPPO M 12X 1,5 L12 DIN908	*DIN 908 HEX SOCKET SCREW PLUG M12X1.5 L12*

GRUPPO FRENO ANTERIORE CE - FRONT BRAKE ASSY

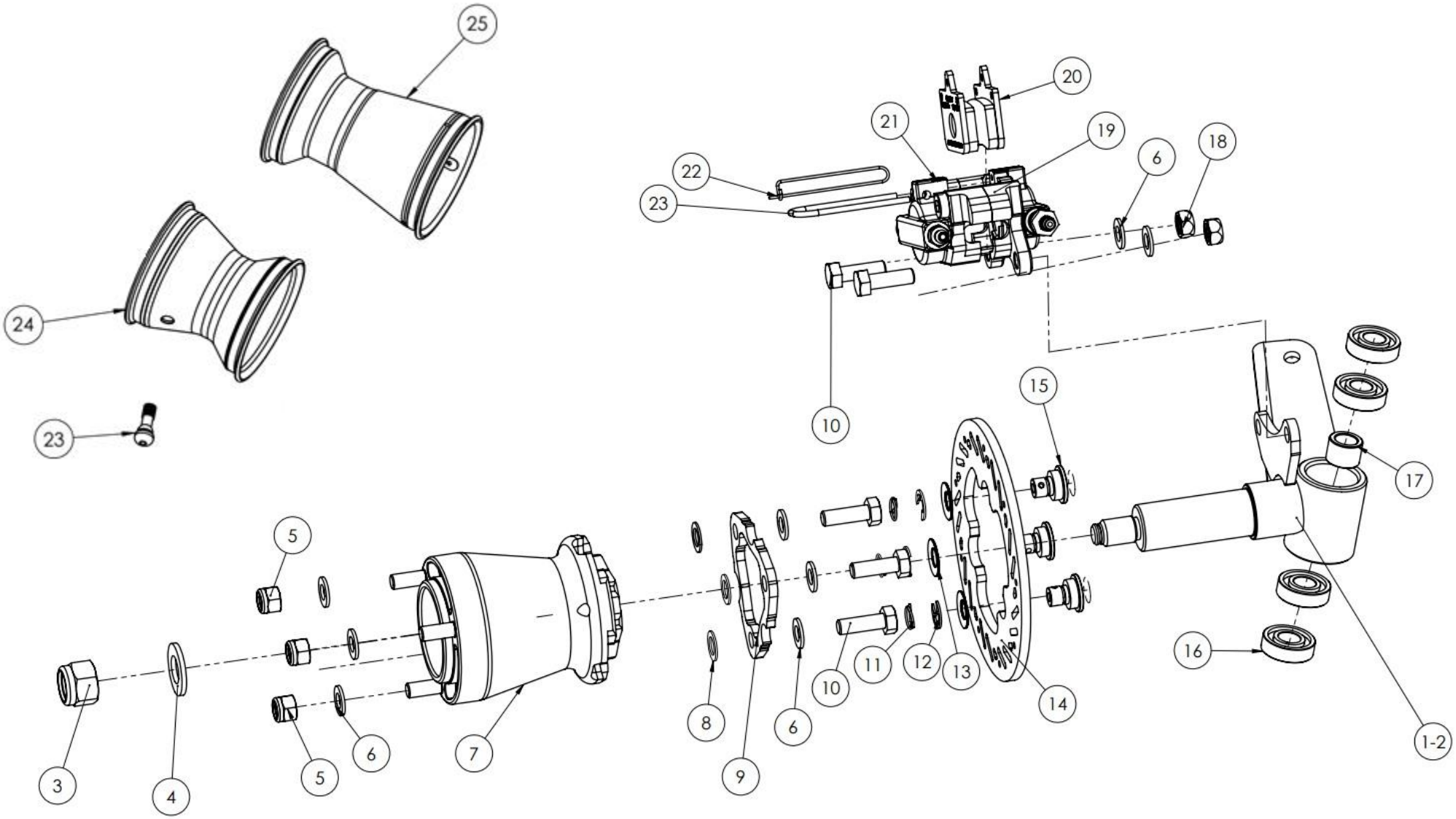

GRUPPO FRENO ANTERIORE CE – FRONT BRAKE ASSY

POS.	COD.	DESCRIZIONE	*DESCRIPTION*
1	FM0.0424D	FUSELLO NOL CE Ø12 DX COMPLETO	*STUB AXLE Ø12 RH COMPLETE CE*
2	FM0.0424S	FUSELLO NOL CE Ø12 SX COMPLETO	*STUB AXLE Ø12 LF COMPLETO CE*
3	AFN.00058	DADO M14X1,5 AUTOBLOCK BASSO	*NUT M14X1,5 SELF-LOCKING*
4	AFN.01564	RONDELLA 15X30X2,5	*WASHER 15-30X2,5*
5	AFN.00128	DADO M 8 AUTOBLOCK ALTO	*NUT M8 HIGH SELF-LOCKING*
6	AFN.00108	RONDELLA 8,5-18X2	*WASHER 8,5-18X2*
7	FMG.04908	MOZZO ANTERIORE AL 94X 80 CE 2.0 ORO COMP.	*FRONT HUB AL 94X 80 CE 2.0 GOLD COMPL*
8	CE00182	RASAMENTO 10-16X1 ACCIAIO	*10-16X1 SHIM*
9	SZ0.04906	FLANGIA DISCO FRENO VEN10 CE 2.0	*BRAKE DISC FLANGE VEN10 CE 2.0*
10	AFN.00107	VITE M 8X 25 ESAGONALE 5739	*M 8X25 HEXAGONAL HEAD SCREW*
11	AFS.00232	SPINA ELASTICA D10 DISCO FRENO	*ELASTIC PIN Ø10 BRAKE DISC*
12	AFN.00231	SEEGER D 8 DISCO FRENO	*SEEGER D8 BRAKE DISC*
13	AFN.00230	RONDELLA DISCO FRENO ELASTICA Ø10-20	*BRAKE DISC ELASTIC WASHER*
14	SL1.04905	DISCO FRENO VEN10 CE 2.0	*BRAKE DISC VEN 10 CE 2.0*
15	SZ0.04907	BUSSOLA DISCO FRENO ANTERIORE CE 2.0	*BRAKE ROTOR PIN CE 2.0*
16	AFS.03338.2RS	CUSCINETTO 6001 Ø12 2RS	*BEARING 6001 STUB AXLE BOLT 2RS*
17	SZ0.E0064	SPESSORE 12X13 INTERNO FUSELLO CE	*STUB AXLE INTERNAL SPACER 12X13 CENT*
18	AFN.00286	DADO M 8 METALBLOCK	*NUT M 8 METALBLOCK*
19	AFS.00306	PASTIGLIA FRENO ANT. V10-MINI NERA	*FRONT BRAKE PAD V04/V06 BLACK*
20	FMG.03258	PINZA ANTERIORE V10 D24 COMP ORO	*FRONT BRAKE CALIPER V10 D24 COMPLETE GOLD*
21	AFS.00187	SPINA SICUREZZA ANT.V11	*FRONT SAFETY PIN V11*
22	AFS.00181	SPINA BLOCCA PASTIGLIA PINZA ANT.V06	*FRONT CALIPER PAD BLOCK PIN V06*
23	AFS.02649	VALVOLA TUBLESS CORTA	*TUBLESS VALVE SHORT*
24	FM0.03794	CERCHIO AL H132 ANT NO VITI CENT COMP.	*ALU FRONT WHEEL H132 N/SCREWS ASSY CENT*
25	FM0.00293NEUT	CERCHIO AL H180 POST NO VITI COMP.	*ALUMINUM REAR RIM H180 NO SCREWS*

IMPIANTO FRENANTE ANTERIORE – FRONT BRAKE SYSTEM

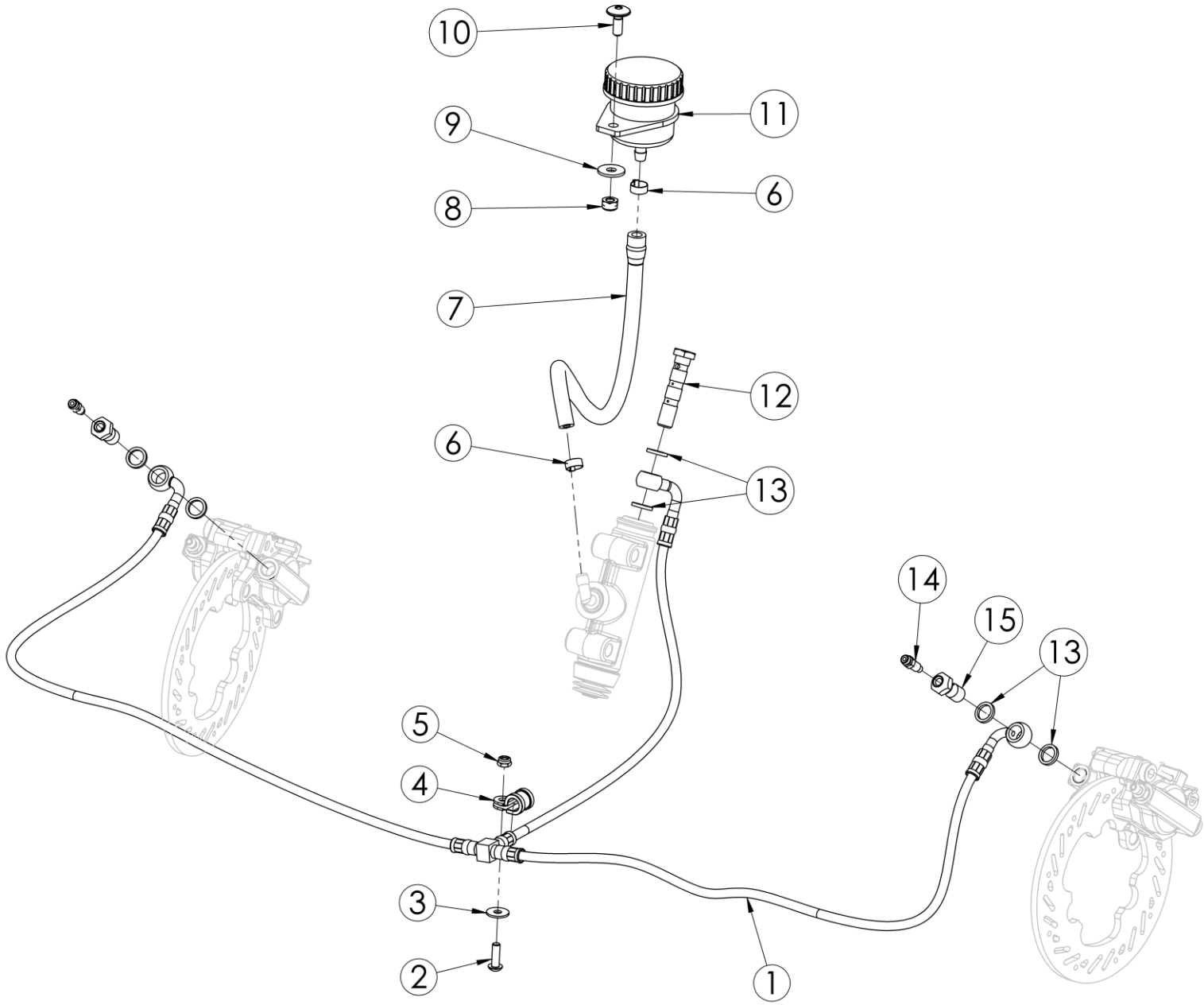

POS.	COD.	DESCRIZIONE	DESCRIPTION
1	AFS.00336	TUBO FRENO OCCHIELLO TRIS ANT V11 ROSSO	FRONT BRAKE HOSE TRIS V11 EYELET
2	AFN.01525	VITE M 5X 16 BOMBATA 7380	*M5X16 CONVEX HEAD SCREW*
3	AFN.00361	RONDELLA 5,5-15X1,5	*WASHER 5,5-15X1,5*
4	AFN.03912	FASCETTA FERMA TUBO FRENO Ø6	*BRAKE TUBE BAND D6*
5	AFN.00360	DADO M 5 AUTOBLOCK BASSO	*NUT M 5 LOW SELF-LOCKING*
6	AFN.02937	FASCETTA ACCIAIO 7-11 TUBO CENTURION	*STEEL BAND 7-11 CENT*
7	AMS.00139	TUBO BENZINA AL METRO	*FUEL PIPE PER METER*
8	AFN.00106	DADO M 6 AUTOBLOCK BASSO	*NUT M6 LOW SELF-LOCKING*
9	AFN.00263	RONDELLA 6,5-18X1,6	*WASHER 6,5-18X1,6*
10	AFS.00261	VITE TESTA TONDA LARGA M 6X 16 PIANALE	*FLOOR TRAY SCREW LARGE ROUND HEAD M6X16*
11	AFS.02325	SERBATOIO OLIO FRENI C/TAPPO CENTURION	*RECOVERY TANK W/CAP CENT*
12	SZ0.02757	RACCORDO TRIPLO FRENO ANTERIORE CENT	*TRIPLE FITTING X FRONT BRAKE TUBE CENT*
13	AFN.00186	RONDELLA 10,5-14X2 RAME	*COPPER WASHER 10,5-14X2*
14	SZ0.00309	SPURGO M 6 V11	*BLEEDER M6 V11*
15	SZ0.00308	RACCORDO COMBINATO M10	*BLEEDER FITTING M10*

POMPA FRENO – MASTER CYLINDER

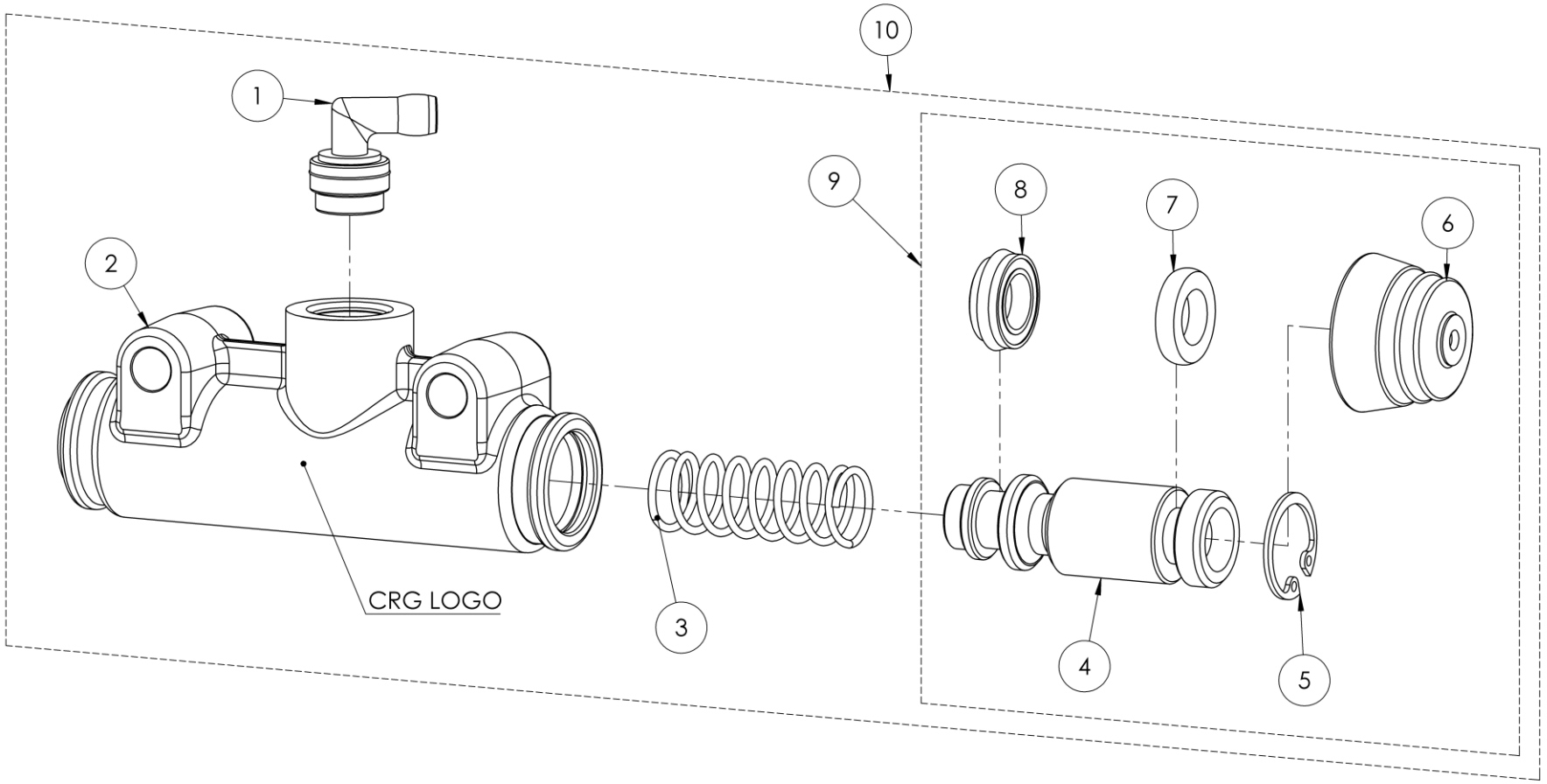

Pompa freno	Pompa completa	Kit revisione
Con logo CRG	FMN.02993	CRG.05567
Senza logo CRG	Non più in vendita, sostituire con FMN.02993	

Master cylinder	Complete master cylinder	Rebuild kit
With CRG logo	FMN.02993	CRG.05567
Without CRG logo	No longer for sale, replace with FMN.02993	

POS.	COD.	DESCRIZIONE	*DESCRIPTION*
1	AFS.05607	RACCORDO INNESTO SERBATOIO 90°	CENTURION MASTER CYLINDER 90° FITTING
2	SAN.02993	CORPO POMPA FRENO D19 NERO CENTURION	*MASTER CYLINDER BODY D.19 CENT*
3	AML.0299203	MOLLA POMPA FRENO D19 CENT	*MASTER CYLINDER SPRING D19 CENT*
4	SD1.06604	PISTONCINO POMPA FRENO D19 2.0 CENT	*MASTER CYL. PISTON D.19 2.0 CENT*
5	AFN.03000	SEEGER D20 POMPA FRENO CENTURION	*SEEGER BRAKE PUMP CENT D20*
6	AFS.02998	COPRIPOLVERE POMPA FRENO D19 CENTURION	*D19 MASTER CYLINDER DUST SHIELD*
7	AFS.05559	GOMMINO POMPA FRENO BOMBATO 19.05-12X4	*CENT MASTER CYLINDER FRONT OIL SEAL 19.05-12X4*
8	AFS.05560	GOMMINO POMPA FRENO DOPPIO LABBRO 19.05-10X7	*CENT MASTER CYLINDER REAR OIL SEAL*
9	CRG.05567	KIT REVISIONE POMPA FRENO D19 CENT 2024	*D19 CENTURION MASTER CYLINDER REBUILDING KIT*
10	FMN.02993	POMPA FRENO D19 CENTURION COMPLETA	*MASTER CYLINDER D19 COMPLETE CENT*

GRUPPO STERZO CENT E - CENT E STEERING GROUP – **LEGACY <2025**

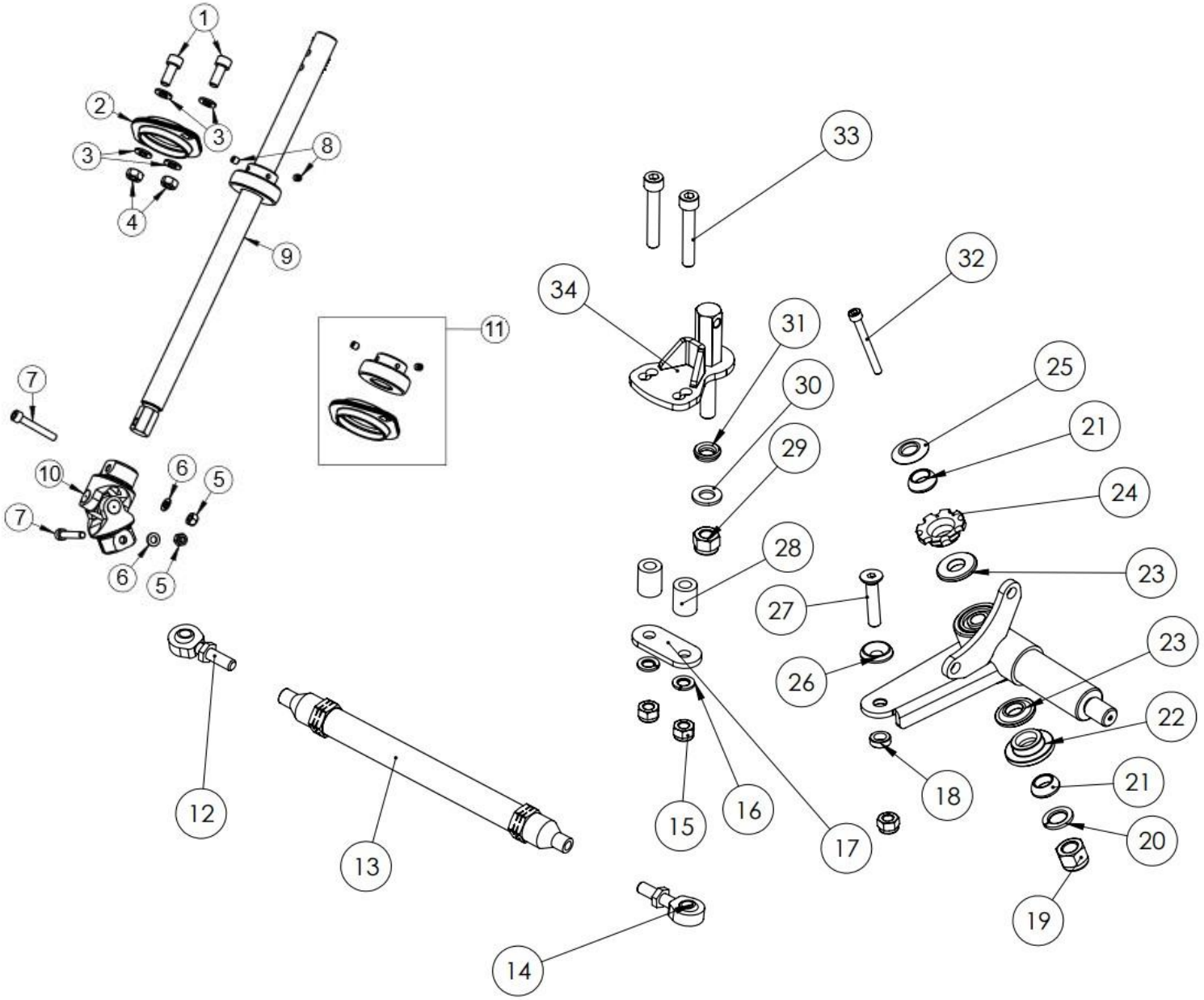

POS.	COD.	DESCRIZIONE	DESCRIPTION
1	AFN.00107	VITE M 8X 25 ESAGONALE 5739	*M 8X25 HEXAGONAL HEAD SCREW*
2	FK0.02121	CUSCINETTO PIANTONE COMPLETO CENTURION	*STEERING COLUMN BEARING COMPLETE CENT*
3	AFN.00129	RONDELLA 8,5-17X1,5	*WASHER 8,5-17X1,5*
4	AFN.00128	DADO M 8 AUTOBLOCK ALTO	*NUT M8 HIGH SELF-LOCKING*
5	AFN.00264	DADO M 6 AUTOBLOCK ALTO	*NUT M6 HIGH SELF-LOCKING*
6	AFN.00105	RONDELLA 6,5-12X1,5	*WASHER 6,5-12X1,5*
7	AFN.00137	VITE M 6X 35 CILINDRICA 5931	*M 6X35 SOCKET HEAD SCREW*
8	AFN.00289	GRANO M 6X 6 CUSCINETTO 30/PULEGGIA	*GRUB SCREW M6X6 AXLE BEARING 30/PULLEY*
9	FC0.02186	PIANTONE STERZO CENTURION	*STEERING WHEEL COLUMN CENT*
10	AFS.02124	GIUNTO CARDANICO D.42 PIANTONE CENT	*STEERING COLUMN JUNKTION D.42 CENT*
11	FK0.02121	CUSCINETTO PIANTONE COMPLETO CENTURION	*STEERING COLUMN BEARING COMPLETE CENT*
12	AFS.0047S	UNIBALL STERZO SX C/DADO	*BALL JOINT LEFT WITH NUT*
13	SL1.06471	BARRETTA STERZO NYLON CM.25 CENT	*TRACK ROD CM.25 CENTURION*
14	AFS.0047D	UNIBALL STERZO DX C/DADO	*BALL JOINT RH WITH NUT*
15	AFN.00128	DADO M 8 AUTOBLOCK ALTO	*NUT M8 HIGH SELF-LOCKING*
16	CE00108	RONDELLA ELASTICA SPACCATA GROWER M 8	*M8 GROWER WASHER*
17	SZ0.03242	PIASTRINA RINFORZO UNIBALL CENT +5	*STIFFNER PLATE STEERING BALL JOINT CENTURION*
18	FBN.00252	SPESSORE 8,5-14X 5 BARRETTA	*ROD SPACER 8,5-14X5 TRACK ROD*
19	AFN.02364	DADO M12 AUTOBLOCK ALTO	*M12 HIGH SELF-LOCKING NUT*
20	AFN.03734	RONDELLA ELASTICA SPACCATA GROWER M12	*M12 GROWER WASHER*
21	SZ0.03537	BOCCOLA MEZZA SFERA CASTER FORO Ø12 CENT	*BUSHING HALF SPHERICAL Ø12 CENTURION*
22	SZ0.03559	CASTER FISSO SFERICO MINI KART	*FIXED CASTER MINI KART*
23	SZ0.05520	SPESSORE 12-30X5 H3 FUSELLO RENTAL	*SPACER 12-30X5 H3 RENTAL*
24	SZ0.03558	CASTER ECCENTRICO SFERICO D12 CENT	*D12 SPHERICAL CAM CENT*
25	SZ0.05365	RONDELLA 12-20X2,5 (FUSELLO CENT)	*WASHER 12 - 20X2,5*
26	SAN.00146	RONDELLA 8 SVASATA NERA	*WASHER 8 COUNTERSUNK BLACK*
27	AFN.00483	VITE M 8X 40 SVASATA 5933	*M 8X 40 COUNTERSUNK HEAD SCREW*
28	SZ0.02307	DISTANZIALE FISSAGGIO BARRETTE CENT Ø8,5X16-20	*TRACK ROD CLAMP SPACER CENT*
29	AFN.02393	DADO M10 AUTOBLOCK ALTO	*NUT M10 HIGH SELF-LOCKING*
30	AFN.01637	RONDELLA 10,5-20X2	*WASHER 10,5-20X2*
31	SZ0.05179	RONDELLA PERNO PIASTRINA BARRETTA STERZO CENT	*STEERING ROD PLATE PIN WASHER*
32	AFN.05487	VITE M12X100 CILIN. 12.9 FILETTO 30MM ZINCATA	CENT E STEERING COLUMN PLATE
33	AFN.00681	VITE M 8X 50 CILINDRICA 5931	*M8X50 HEX SOCKET SCREW*
34	SZ0.05488	PIASTRA PIANTONE STERZO CE + ASSE 2.0	CENT E STEERING COLUMN PLATE

GRUPPO STERZO CENT E - CENT E STEERING GROUP

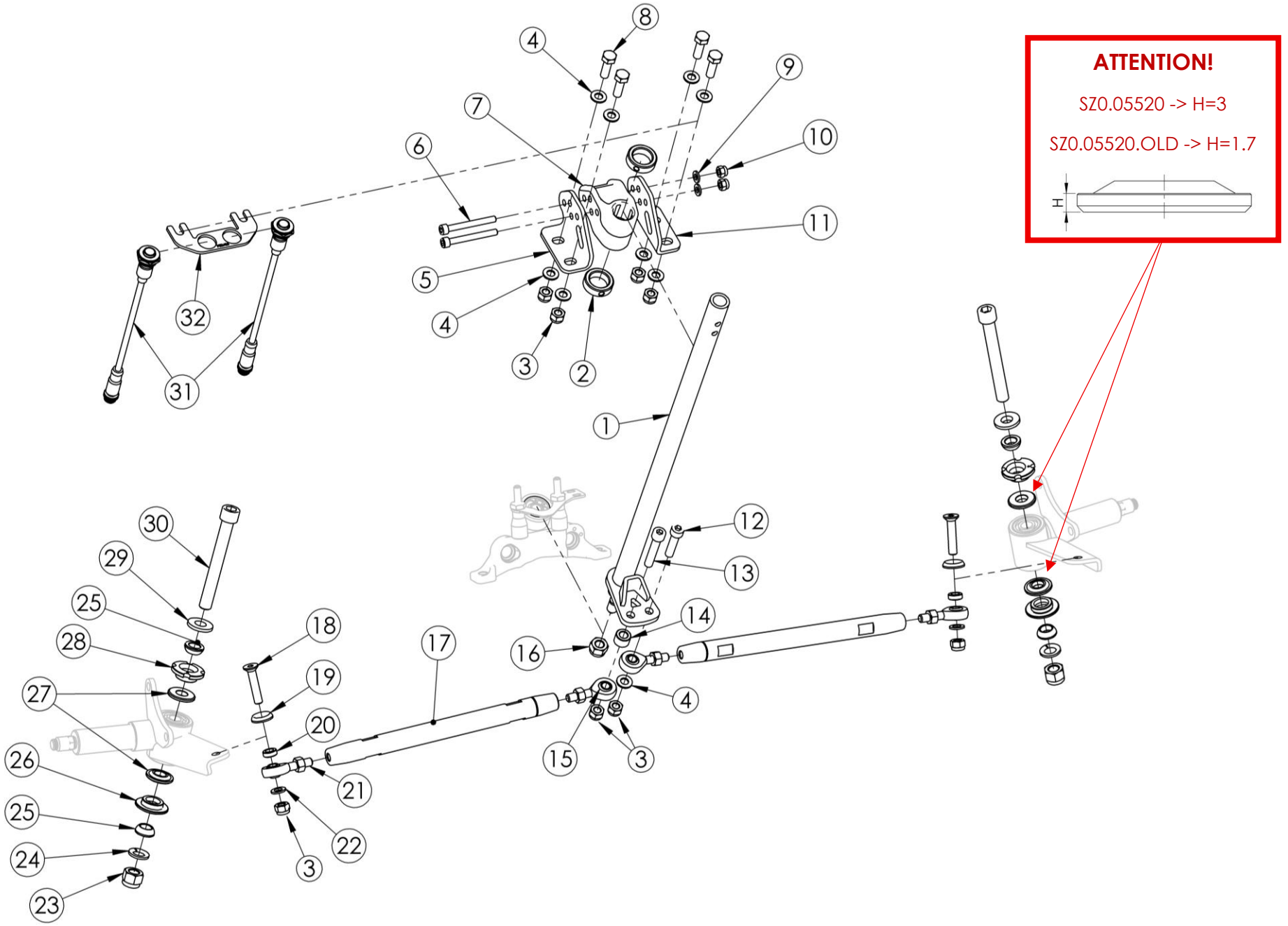

POS.	COD.	DESCRIZIONE	DESCRIPTION
1	FC0.06504	PIANTONE STERZO DIRETTO CE	*DIRECT STEERING COLUMN CE*
2	FAN.00356	BOCCOLA PIANTONE NERA	*STEERING COLUMN LOCK RING BLACK*
3	AFN.00128	DADO M 8 AUTOBLOCK ALTO	*NUT M8 HIGH SELF-LOCKING*
4	AFN.00350	RONDELLA 8,5-16X1,5	*WASHER 8,5-16X1,5*
5	SC0.6406S	PIASTRA BOCCOLA PLASTICA PIANTONE CENT SX	*RH STEERING COLUMN PLASTIC BUSHING PLATE*
6	AFN.02418	VITE M 6X 55 CILINDRICA 5931	*M 6X 55 SOCKET HEAD SCREW*
7	AFS.04812	SUPPORTO PIANTONE PLASTICA 4 FORI	*PLASTIC COLUMN SUPPORT 4 HOLES*
8	AFN.03516	VITE M 8X 25 ESAGONALE 10.9 5739	*M 8X25 HEX SCREW*
9	AFN.00105	RONDELLA 6,5-12X1,5	*WASHER 6,5-12X1,5*
10	AFN.00264	DADO M 6 AUTOBLOCK ALTO	*NUT M6 HIGH SELF-LOCKING*
11	SC0.6406D	PIASTRA BOCCOLA PLASTICA PIANTONE CENT DX	*LH STEERING COLUMN PLASTIC BUSHING PLATE*
12	AFN.02153	VITE M 8X 35 CILINDRICA 5931	*M 8X35 SOCKET HEAD SCREW*
13	AFN.00159	VITE M 8X 45 CILINDRICA 5931	*M 8X45 SOCKET HEAD SCREW*
14	SZ0.06221	DISTANZIALE FISSAGGIO BARRETTE CENT Ø8,5X16-10	*TRACK ROD CLAMP SPACER CENT*
15	AFS.0047D	UNIBALL STERZO DX C/DADO	*BALL JOINT RH WITH NUT*
16	AFN.02393	DADO M10 AUTOBLOCK ALTO	*NUT M10 HIGH SELF-LOCKING*
17	SL1.06471	BARRETTA STERZO RINFORZATA MM.255 CENT	*TRACK ROD MM.255 CENTURION*
18	AFN.00483	VITE M 8X 40 SVASATA 5933	*M 8X 40 COUNTERSUNK HEAD SCREW*
19	SAN.00146	RONDELLA 8 SVASATA NERA	*WASHER 8 COUNTERSUNK BLACK*
20	FBN.00252	SPESSORE 8,5-14X 5 BARRETTA	*ROD SPACER 8,5-14X5 TRACK ROD*
21	AFS.0047S	UNIBALL STERZO SX C/DADO	*BALL JOINT LEFT WITH NUT*
22	AFN.00287	RONDELLA 8,5-14X1,5	*WASHER 8,5-14X1,5*
23	AFN.02364	DADO M12 AUTOBLOCK ALTO	*M12 HIGH SELF-LOCKING NUT*
24	AFN.03734	RONDELLA ELASTICA SPACCATA GROWER M12	*M12 GROWER WASHER*
25	SZ0.03537	BOCCOLA MEZZA SFERA CASTER FORO Ø12 CENT	*BUSHING HALF SPHERICAL Ø12 CENTURION*
26	SZ0.03559	CASTER FISSO SFERICO MINI KART	*FIXED CASTER MINI KART*
27	SZ0.05520	SPESSORE 12-30X5 H3 FUSELLO RENTAL	*SPACER 12-30X5 H3 RENTAL*
28	SZ0.03558	CASTER ECCENTRICO SFERICO D12 CENT	*D12 SPHERICAL CAM CENT*
29	SZ0.05365	RONDELLA 12-20X2,5 (FUSELLO CENT)	*WASHER 12 - 20X2,5*
30	AFN.05487	VITE M12X100 CILIN. 12.9 FILETTO 30MM ZINCATA	*M12X 95 SOCKET HEAD SCREW 30MM*
31	AFS.06878	PULSANTE BOOSTER CE 2.0	BOOST BUTTON CE 2.0
32	SC0.06899	SUPPORTO PULSANTI FRECCE M16 CE	*CE M16 TURN SIGNAL BUTTON BRACKET*

ASSIEME VOLANTE E-DRENALINE - E-DRENALINE STEERING WHEEL ASSY – **LEGACY <2025**

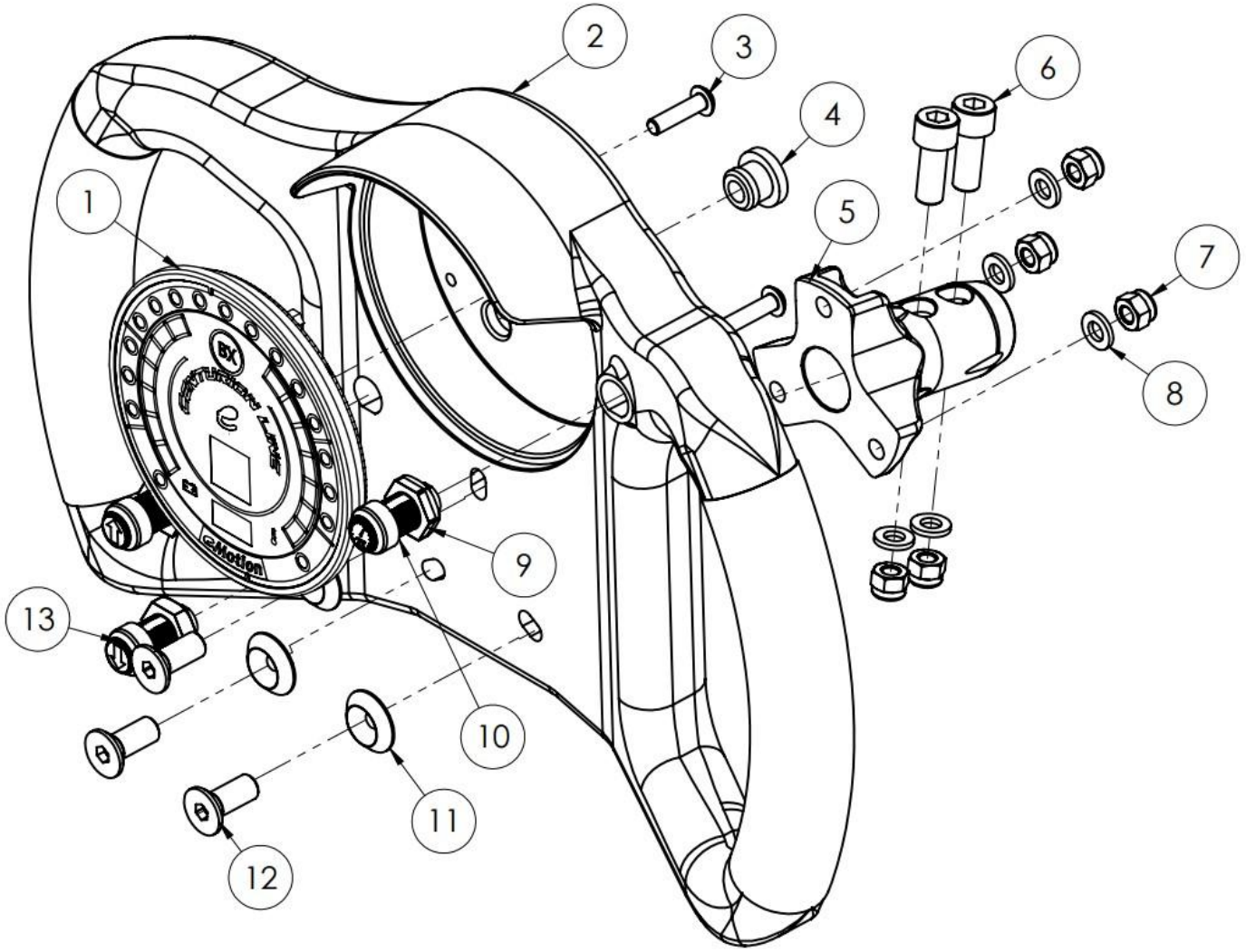

ASSIEME VOLANTE E-DRENALINE - E-DRENALINE STEERING WHEEL ASSY – **LEGACY <2025**

POS.	COD.	DESCRIZIONE	DESCRIPTION
0	FM0.E0153	VOLANTE CE COMPLETO + MOZZO	*COMPLETE CE STEERING WHEEL + HUB*
1	CE00223	DISPLAY CRG V1 CABLATO	*E-DRENALINE DISPLAY*
2	CE00153	VOLANTE CE D345R OPACO + IMPUGNATURA SOFT	*E-DRENALINE STEERING WHEEL D345R*
3	AFN.05663	VITE M 5X 20 BOMBATA 7380	*M 5X 20 CONVEX HEAD SCREW*
5	FAG.01626	MOZZO VOLANTE INCLINATO ORO	*STEERING WHEEL HUB INCLINED GOLD*
6	AFN.00732	VITE M 8X 25 CILINDRICA 5931	*M 8X25 SOCKET HEAD SCREW*
7	AFN.00264	DADO M 6 AUTOBLOCK ALTO	*NUT M6 HIGH SELF-LOCKING*
8	AFN.00105	RONDELLA 6,5-12X1,5	*WASHER 6,5-12X1,5*
10	CE00227	PULSANTE BOOSTER CABLATO + DADO	*BOOST BUTTON WITH HARNESS*
11	SAN.00249	RONDELLA 6 SVASATA NERA	*WASHER 6 COUNTERSUNK BLACK*
12	AFN.00499	VITE M 6X 30 SVASATA 5933	*M 6X30 CONTERSUNK HEAD SCREW*
13	CE00226	PULSANTE DIREZIONE PEDALIERA CABLATO + DADO	*FOOTREST DIRECTION PEDAL WITH HARNESS*

ASSIEME VOLANTE E-DRENALINE - E-DRENALINE STEERING WHEEL ASSY

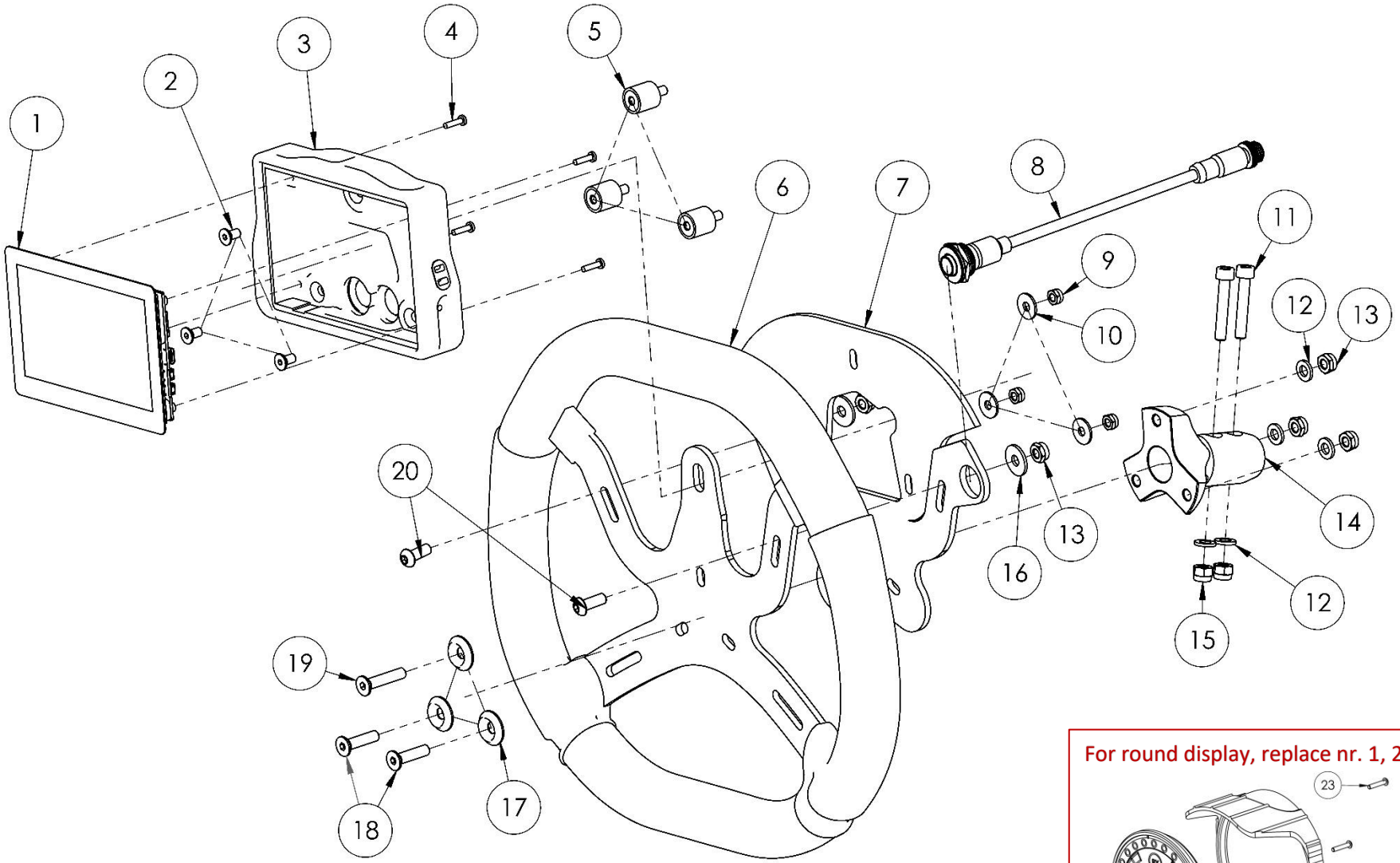

For round display, replace nr. 1, 2, 3, 4, 5, 20 with:

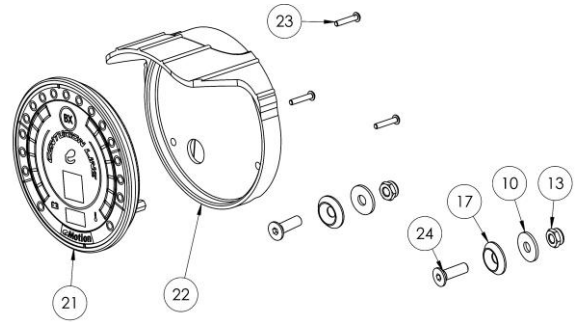

ASSIEME VOLANTE E-DRENALINE - E-DRENALINE STEERING WHEEL ASSY

POS.	COD.	DESCRIZIONE	DESCRIPTION
1	AFS.07116	DISPLAY DASHBOARD RENTAL	DISPLAY DASHBOARD RENTAL
2	AFN.00711	VITE M 5X 10 SVASATA 5933	*M5X10 COUNTERSUNK HEAD SCREW*
3	AFS.07117	CASE DISPLAY DASHBOARD RENTAL	*CASE DISPLAY DASHBOARD RENTAL*
4	AFN.07155	VITE M 3X 12 BOMBATA TESTA A CROCE	*M 3X 12 PAN HEAD SCREW*
5	AFS.07104	SILENTBLOCK M+F M5 Ø15 X DISPLAY CENT/CE	*SILENTBLOCK M+F M5 Ø15 X DISPLAY CENT/CE*
6	AFS.06999	VOLANTE FLAT OUT SPIDER CRG 360 R3.0 BLACK/ORANGE	STEERING WHEEL SPIDER 360 BLACK/ORANGE VS.3.0
7	SAN.06908	ADATTATORE DISPLAY VOLANTE HIGH GRIP CE	*STEERING WHEEL HIGH GRIP CE DISPLAY ADAPTER*
8	AFS.06878	PULSANTE BOOSTER CE 2.0	*BOOST BUTTON CE 2.0*
9	AFN.00360	DADO M 5 AUTOBLOCK BASSO	*NUT M 5 LOW SELF-LOCKING*
10	AFN.00361	RONDELLA 5,5-15X1,5	*WASHER 5,5-15X1,5*
11	AFN.00137	VITE M 6X 35 CILINDRICA 5931	*M 6X35 SOCKET HEAD SCREW*
12	AFN.00105	RONDELLA 6,5-12X1,5	*WASHER 6,5-12X1,5*
13	AFN.00106	DADO M 6 AUTOBLOCK BASSO	*NUT M6 LOW SELF-LOCKING*
14	FAG.01626	MOZZO VOLANTE INCLINATO ORO	*STEERING WHEEL HUB INCLINED GOLD*
15	AFN.00264	DADO M 6 AUTOBLOCK ALTO	*NUT M6 HIGH SELF-LOCKING*
16	AFN.00263	RONDELLA 6,5-18X1,6	*WASHER 6,5-18X1,6*
17	SAN.00249	RONDELLA 6 SVASATA NERA	*WASHER 6 COUNTERSUNK BLACK*
18	AFN.00295	VITE M 6X 25 SVASATA 5933	*M6X25 COUNTERSUNK HEAD SCREW*
19	AFN.00499	VITE M 6X 30 SVASATA 5933	*M 6X30 CONTERSUNK HEAD SCREW*
20	AFN.00502	VITE M 6X 16 BOMBATA 7380	*M 6X16 CONVEX HEAD SCREW*
21	CE00223	DISPLAY CRG V1 CABLATO	*E-DRENALINE DISPLAY*
22	AFS.07154	HOUSING DISPLAY CE V1.0	*HOUSING DISPLAY CE V1.0*
23	CE00157	VITE M 3X 16 BOMBATA ZINCATA	*M3X16 BUTTON HEAD SCREW*
24	AFN.00261	VITE M 6X 20 SVASATA 5933	*M6X20 COUNTERSUNK HEAD SCREW*

ASSIEME ELETTRONICA PIANTONE – STEERING SHAFT ELECTRONICS ASSY – **LEGACY <2025**

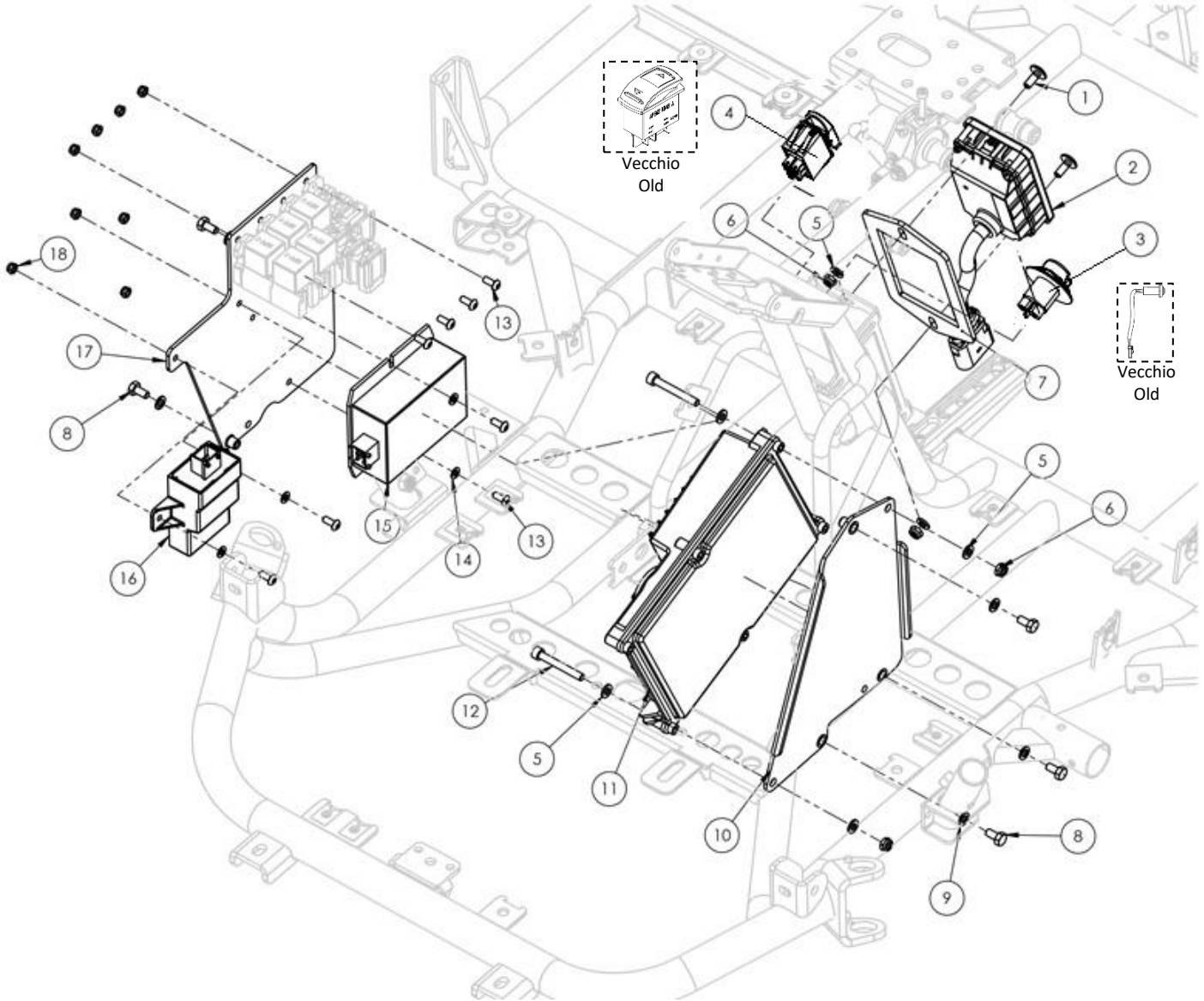

ASSIEME ELETTRONICA PIANTONE – STEERING SHAFT ELECTRONICS ASSY – **LEGACY <2025**

POS.	COD.	DESCRIZIONE	DESCRIPTION
1	AFS.00261	VITE TESTA TONDA LARGA M 6X 16 PIANALE	*FLOOR TRAY SCREW LARGE ROUND HEAD M6X16*
2	CE00188	CARD READER RFID	*CARD READER RFID*
3	AFS.05206	PULSANTE KEYSWITCH	*KEYSWITCH BUTTON*
3'	CE00161	PULSANTE DRIVE	*APEM DRIVE SWITCH*
4	AFS.05207	PULSANTE DRIVE 2.0	*DRIVE DIRECTION SELECTOR*
4'	AFS.05958	PULSANTE START CE 2.1	*START BUTTON CE 2.1*
5	AFN.00105	RONDELLA 6,5-12X1,5	*WASHER 6,5-12X1,5*
6	AFN.00106	DADO M 6 AUTOBLOCK BASSO	*NUT M6 LOW SELF-LOCKING*
7	SAN.E1119	SUPPORTO CHIAVE NUMERICO CE NERO	*CARD READER MOUNTING PLATE*
8	AFN.03773	VITE M 6X 12 FLANGIATA ZIGRINATA	*M8X10 SOCKET HEAD SCREW*
9	AFN.03732	RONDELLA ELASTICA SPACCATA GROWER M 6	*M6 ELASTIC WASHER GROWER*
10	FM0.E0975	PIASTRA SUPPORTO ECU LINC2 + RIVETTI CE	*#VALORE!*
11	CE00183	ECU LINC2 + FIRMWARE CE	*CE ECU MOTOR CONTROLLER BY LINDE*
12	AFN.02035	VITE M 6X 45 CILINDRICA 5931	*M6X45 SOCKET HEAD SCREW*
13	AFN.00359	VITE M 5X 12 BOMBATA 7380	*M 5X12 CONVEX HEAD SCREW*
14	AFN.02264	RONDELLA 5,3-10X1	*WASHER 5,3-10X1*
15	CE00169	DC/DC 12V 75W CONVERTER	*DC/DC 12V 75W*
16	CE00187	LOAD RESISTOR	*LOADING RESISTOR CE*
17	FM0.E0980	SUPPORTO DC 150W + RIVETTI	*RELAY AND DCDC MOUNT*
18	AFN.00360	DADO M 5 AUTOBLOCK BASSO	*NUT M 5 LOW SELF-LOCKING*

ASSIEME ELETTRONICA PIANTONE – STEERING SHAFT ELECTRONICS ASSEMBLY

Previous version with mounting plate

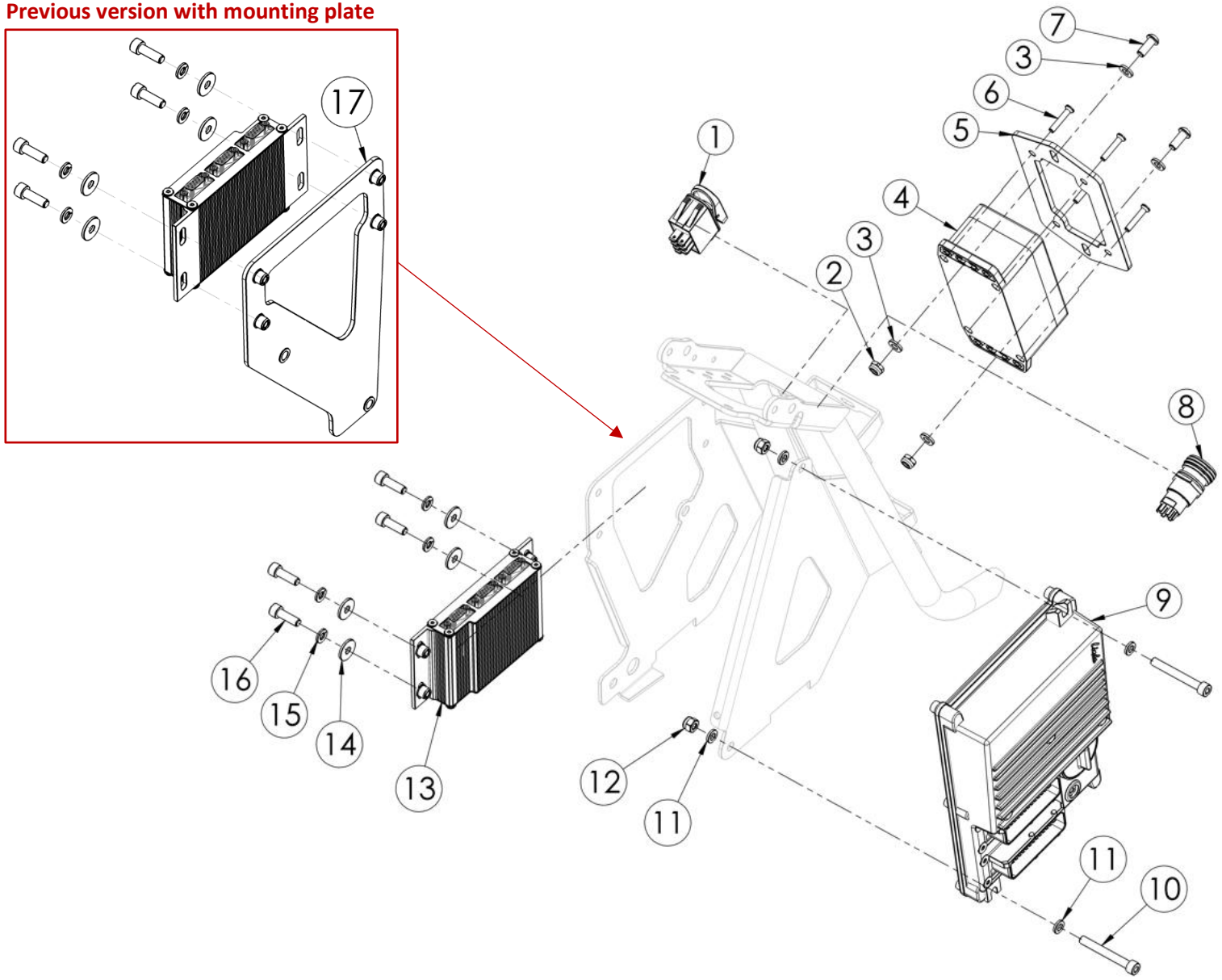

ASSIEME ELETTRONICA PIANTONE – STEERING SHAFT ELECTRONICS ASSEMBLY

POS.	COD.	DESCRIZIONE	DESCRIPTION
1	AFS.05207	PULSANTE DRIVE 2.0	DRIVE DIRECTION SELECTOR
2	AFN.00106	DADO M 6 AUTOBLOCK BASSO	*NUT M6 LOW SELF-LOCKING*
3	AFN.00105	RONDELLA 6,5-12X1,5	*WASHER 6,5-12X1,5*
4	AFS.06684	KCD RACEFACER CE CAN MODULE	*KCD RACEFACER CE CAN MODULE*
5	SAN.E1119	SUPPORTO CHIAVE NUMERICO CE NERO	*CARD READER MOUNTING PLATE*
6	AFN.05620	VITE M 4X 25 SVASATA 5933	*M 4X25 COUNTERSUNK HEAD SCREW*
7	AFN.00502	VITE M 6X 16 BOMBATA 7380	*M 6X16 CONVEX HEAD SCREW*
8	AFS.05958	PULSANTE START CE 2.1	*START BUTTON CE 2.1*
9	CE00183	ECU LINC2 + FIRMWARE CE	*CE ECU MOTOR CONTROLLER BY LINDE*
10	AFN.00358	VITE M 6X 50 CILINDRICA 5931	*M 6X 50 SOCKET HEAD SCREW*
11	AFN.00287	RONDELLA 8,5-14X1,5	*WASHER 8,5-14X1,5*
12	AFN.00264	DADO M 6 AUTOBLOCK ALTO	*NUT M6 HIGH SELF-LOCKING*
13	FM0.06705	POWER DISTRIBUTION BOX CE	*POWER DISTRIBUTION BOX CE*
14	AFN.00263	RONDELLA 6,5-18X1,6	*WASHER 6,5-18X1,6*
15	AFN.03732	RONDELLA ELASTICA SPACCATA GROWER M 6	*M6 ELASTIC WASHER GROWER*
16	AFN.00183	VITE M 6X 20 CILINDRICA 5931	*M6X20 SOCKET HEAD SCREW*
17	FM0.04807	SUPPORTO DC-DC RELE FUSIBILI CE + RIVETTI	*DC-DC MOUNTING PLATE WITH RIVETS*

INVERTER COMPLETO – INVERTER ASSEMBLY

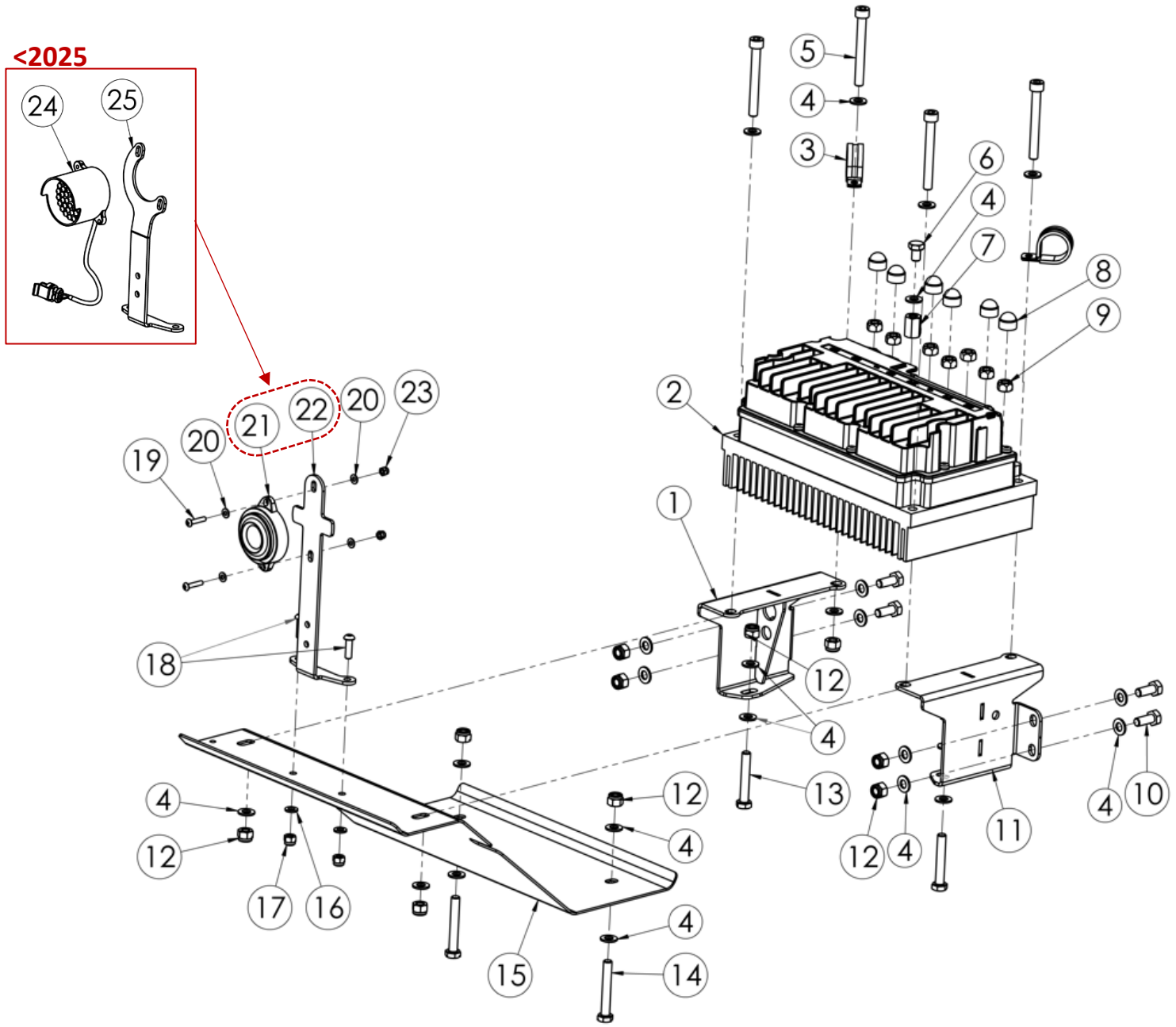

POS.	COD.	DESCRIZIONE	*DESCRIPTION*
1	SZ0.E945S	SUPPORTO INVERTER SX CE	CE LEFT INVERTER MOUNT
2	CE00170	INVERTER PM AC S50 PER CE	*INVERTER PM AC S50*
3	AFS.02021	FASCETTA PASSACAVO GOMMATA DIN3016	*DD2 NUMBERPLATE HOSE CLAMP*
4	AFN.00350	RONDELLA 8,5-16X1,5	*WASHER 8,5-16X1,5*
5	AFN.01095	VITE M 8X 70 CILINDRICA 5931	*M8X70 SOCKET HEAD SCREW*
6	TES.08X012	VITE M 8X 12 ESAGONALE 5739	*M 8X 12 HEXAGONAL HEAD SCREW*
7	SZ0.E0219	DISTANZIALE M8X20	*M8X20 SPACER*
8	CE00289	TAPPO PROTEZIONE VITE M8	*PROTECTION CUP FOR M8 SCREW*
9	AFN.00286	DADO M 8 METALBLOCK	*NUT M 8 METALBLOCK*
10	AFN.00909	VITE M 8X 20 ESAGONALE	*M8X20 HEXAGONAL HEAD SCREW*
11	SL1.E945D	ZINC>SUPPORTO INVERTER DX CE	*CE RIGHT INVERTER MOUNT*
12	AFN.00128	DADO M 8 AUTOBLOCK ALTO	*NUT M8 HIGH SELF-LOCKING*
13	AFN.00443	VITE M 8X 50 ESAGONALE 5739	*M 8X50 HEXAGONAL HEAD SCREW*
14	TES.08X055	VITE M 8X 55 ESAGONALE 5739	*M 8X 55 HEXAGONAL HEAD SCREW*
15	CE.AML.0987	DEFLETTORE POSTERIORE CE	*CE INVERTER MUD-GUARD*
16	AFN.00105	RONDELLA 6,5-12X1,5	*WASHER 6,5-12X1,5*
17	AFN.00264	DADO M 6 AUTOBLOCK ALTO	*NUT M6 HIGH SELF-LOCKING*
18	AFN.02144	VITE M 6X 20 BOMBATA 7380	*M6X20 BUTTON HEAD SCREW*
19	AFN.02543	VITE M 4X 20 BOMBATA 7380 ZINCATA	*M4X20 CONVEX HEAD SCREW*
20	AFN.02445	RONDELLA 4,5-12X1,5	*WASHER 4,5-12X1,5*
21	AFS.06483	LUCE STOP POSTERIORE CENT 2.0	*REAR STOP LIGHT CENT 2.0*
22	SZ0.E1289	SUPPORTO FANALE STOP CE	*CE BRAKE LIGHT STAND*
23	AFN.00701	DADO M 4 AUTOBLOCK ALTO	*M4 HIGH SELF-LOCKING NUT*
24	FL1.02518	LUCE STOP POST. TONDA CENT CABLATA	*CENTURION REAR STOP LIGHT ROUND*
25	SZ0.E128901	SUPPORTO FANALE STOP CE	*CE BRAKE LIGHT STAND*

ASSIEME BATTERIA CE 60AH- CE 60AH BATTERY ASSEMBLY – **LEGACY <2025**

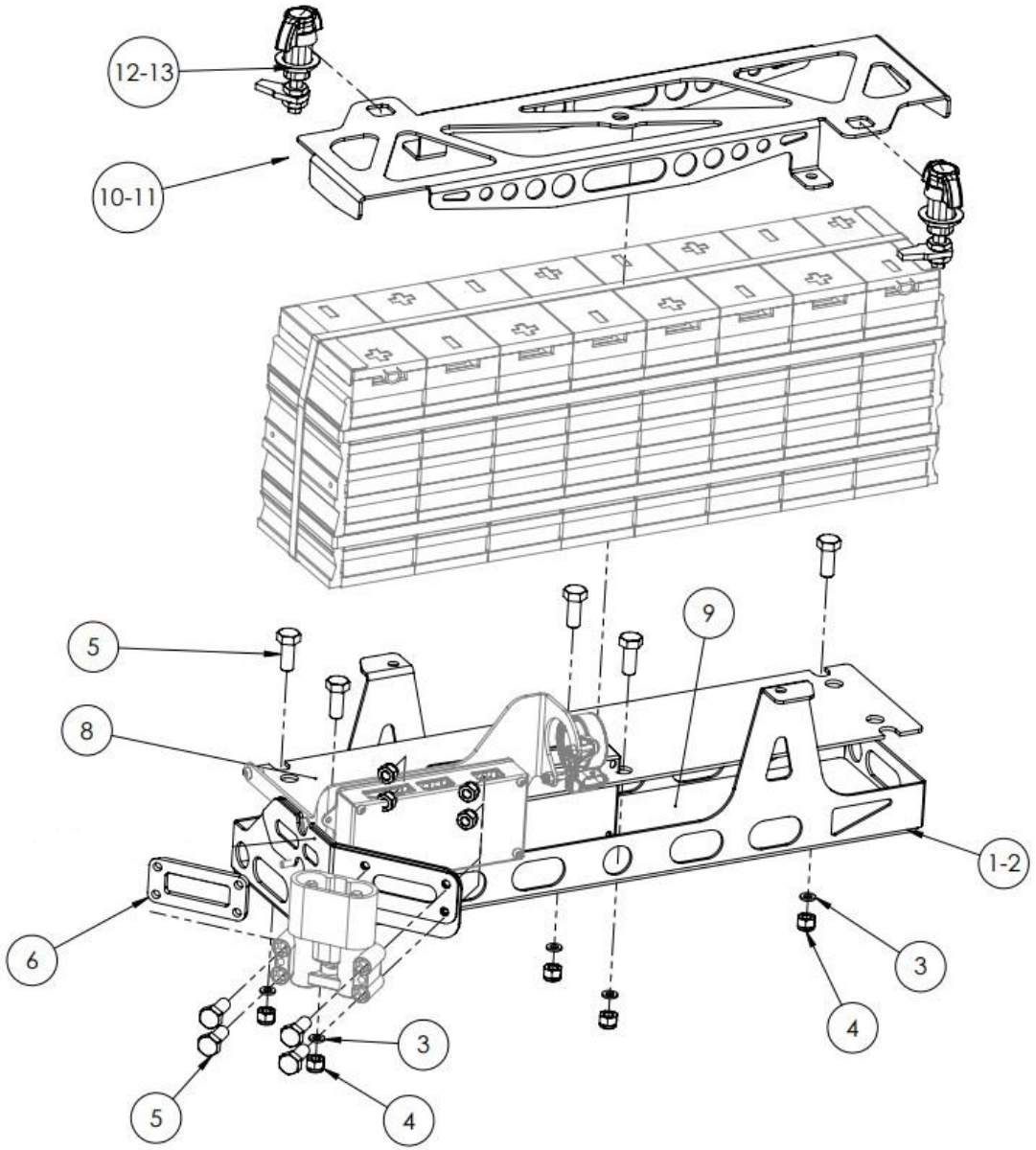

ASSIEME BATTERIA CE 60AH- CE 60AH BATTERY ASSEMBLY – **LEGACY <2025**

POS.	COD.	DESCRIZIONE	DESCRIPTION
1	FVO.4847D	SUPPORTO BATT. CE 100AH SGANCIO RAPIDO DX NERO OPACO	*CE BATTERY HOLDER 100AH QUICK RELEASE RH MATTE BLACK*
2	FVO.4847S	SUPPORTO BATT. CE 100AH SGANCIO RAPIDO SX NERO OPACO	*CE BATTERY HOLDER 100AH QUICK RELEASE LF MATTE BLACK*
3	AFN.00105	RONDELLA 6,5-12X1,5	*WASHER 6,5-12X1,5*
4	AFN.00128	DADO M 8 AUTOBLOCK ALTO	*NUT M8 HIGH SELF-LOCKING*
5	AFN.00107	VITE M 8X 25 ESAGONALE 5739	*M 8X25 HEXAGONAL HEAD SCREW*
6	CE.AML.135302	SPESSORE 5 MM PRESA BATTERIA CE	*5 MM SPACER BATTERY CONNECTOR*
8	TL1.E103405	PIASTRA SOTTO BATTERIA CE	*BOTTOM BATTERY PLATE*
9	AFS.0521902	LASTRA GOMMA ANTIVIBRANTE BATTERIA CE	*CE BARRETY ANTI-VIBRATION RUBBER SHEET (60-100AH LONG TYPE)*
10	FVO.4848D	COPERCHIO BATT. CE 100AH SGANCIO RAPIDO DX NERO OP	*BATTERY COVER CE 100AH FAST SWAPPING RIGHT*
11	FVO.4848S	COPERCHIO BATT. CE 60 AH SGANCIO RAPIDO SX NERO OP	*BATTERY COVER CE 60AH FAST SWAPPING RIGHT*
12	AFS.4893D	SGANCIO RAPIDO A POMELLO SOUTHCO DX	*FAST FASTER QUARTER TURN SOUTHCO RIGHT*
13	AFS.4893S	SGANCIO RAPIDO A POMELLO SOUTHCO SX	*FAST FASTER QUARTER TURN SOUTHCO LEFT*

PACCO BATTERIE - CE BATTERY PACK – **LEGACY <2025**

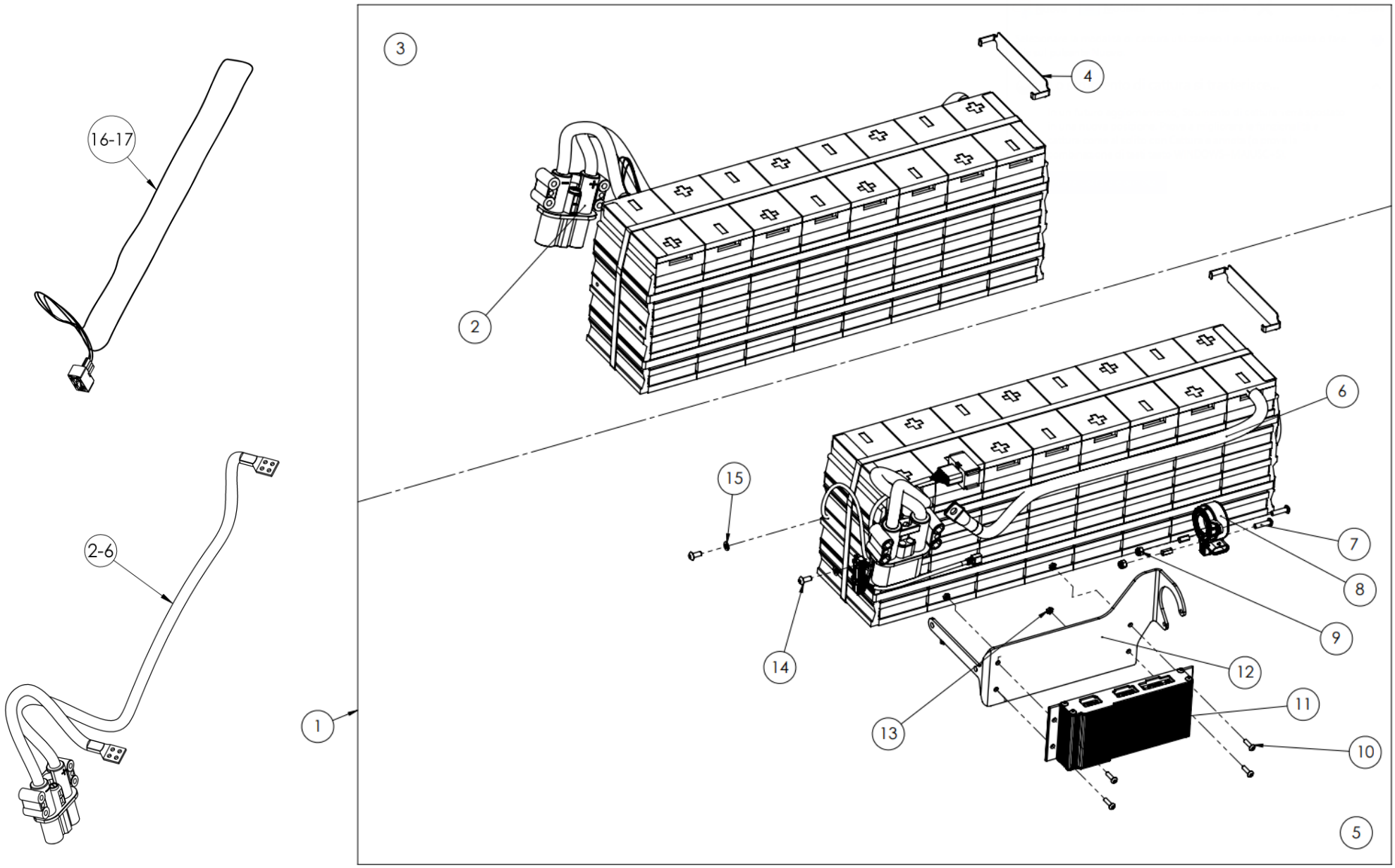

POS.	COD.	DESCRIZIONE	DESCRIPTION
1	CE00202	BATTERY PACK INNOPOWER 60 AH CON SUPP. E BMS	*60AH CE BATTERYPACK*
1	CE00203	BATTERY PACK INNOPOWER 100 AH CON SUPP. E BMS	*100AH BATTERYPACK*
1	AFS.06203	BATTERY PACK IP 100 GBS HIGH ENERGY 5 KWH	BATTERY PACK CE 2.0 HIGH ENERGY 100AH 5.0KWH
2	AFS.5600S	CABLAGGIO DI POTENZA BATTERIA LIBAL CE SX	BATTERY POWER WIRING HARNESS LF LIBAL CE
4	~~SZ0.E1422~~	COPERCHIO CONTATTI BATTERIA CE	~~*CE CONTACTS COVER*~~
6	AFS.5600D	CABLAGGIO DI POTENZA BATTERIA LIBAL CE DX	*BATTERY POWER WIRING HARNESS RH LIBAL CE*
7	AFN.05581	VITE M 5X 18 BOMBATA 7380	*M5X18 CONVEX HEAD SCREW*
8	CE00265	SENSORE CORRENTE LEM X BATTERIA POWERPLAZA	*LEM CURRENT SENSOR*
9	AFN.02176	DADO M 5 AUTOBLOCK ALTO	*M5 HIGH SELF-LOCKING NUT*
10	TBO.04X030	VITE M 4X 30 BOMBATA 7380	*M 4X 30 CONVEX HEAD SCREW*
11	AFS.05011	BATTERY MANAGEMENT SYSTEM 2.0 LIBAL C-BMS24	*BATTERY MANAGEMENT SYSTEM 2.0*
11'	CE00210	BMS CONTROL UNIT EMUS	*BMS ELEKTROMOTUS 12V*
12	SZ0.04654	SUPPORTO BMS PER SENSORE GEN 2	*EN 2 BMS MOUNT*
13	AFN.00701	DADO M 4 AUTOBLOCK ALTO	*M4 HIGH SELF-LOCKING NUT*
14	AFN.00359	VITE M 5X 12 BOMBATA 7380	*M 5X12 CONVEX HEAD SCREW*
15	AFN.02264	RONDELLA 5,3-10X1	*WASHER 5,3-10X1*
16	AFS.0556401	CABLAGGIO BATTERIA SX LIBAL CE	*HIGH DENSITY BATTERY HARNESS LEFT*
16'	AFS.04595	CABLAGGIO EMUS BMS BATTERIA SX	*LEFT BATTERY HARNESS*
17	AFS.0556301	CABLAGGIO BATTERIA DX LIBAL CE	*HIGH DENSITY BATTERY HARNESS RIGHT*
17'	AFS.04594	CABLAGGIO EMUS BMS BATTERIA DX	*RIGHT BATTERY HARNESS*

ASSIEME BATTERIA CE 7.5 kWh - CE 7.5 kWh BATTERY ASSEMBLY

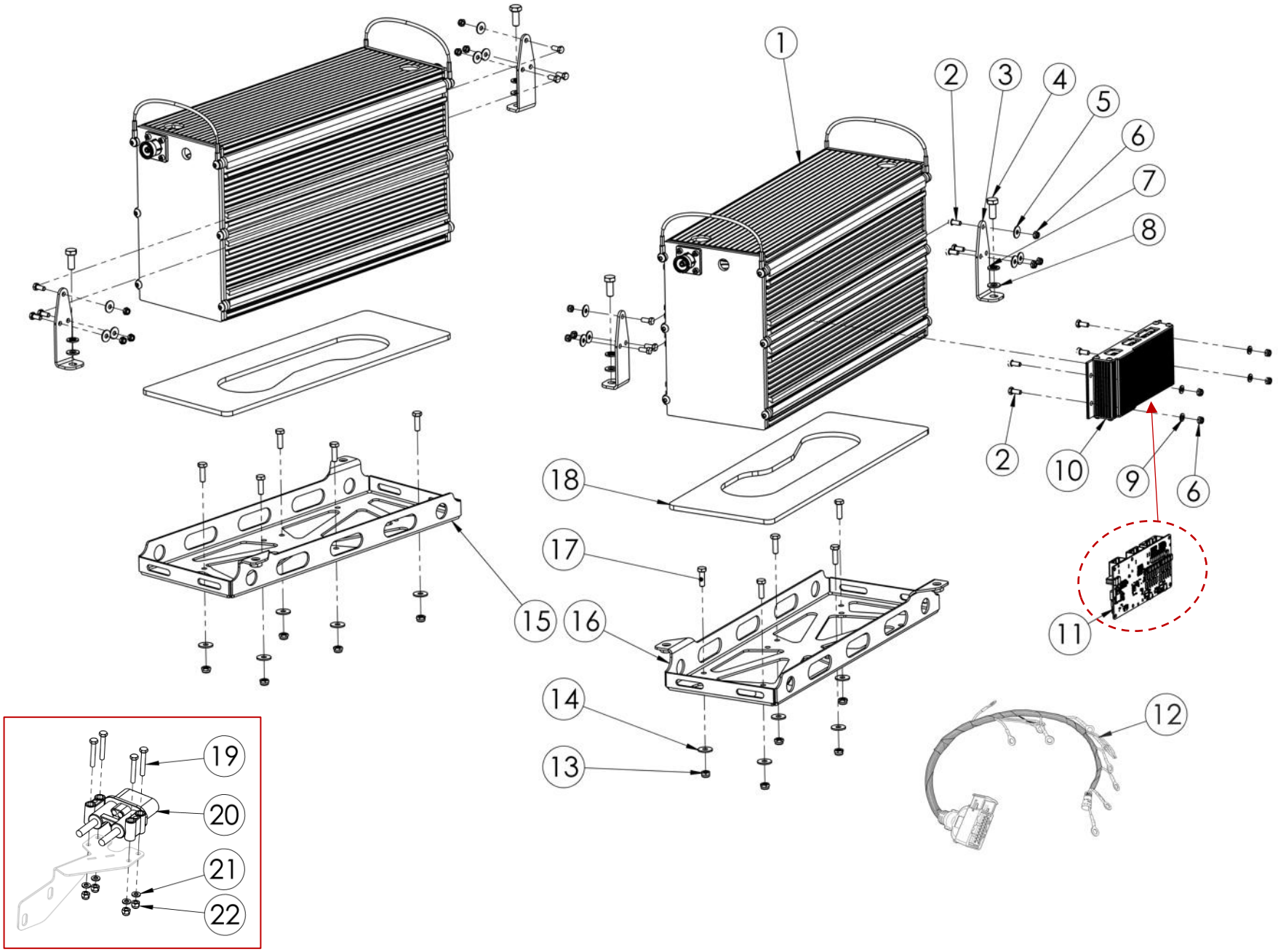

ASSIEME BATTERIA CE 7.5 kWh - CE 7.5 kWh BATTERY ASSEMBLY

POS.	COD.	DESCRIZIONE	DESCRIPTION
1	AFS.06115	MODULO BATTERIA 11S 3.8 kWh	*11S 3.8 kWh BATTERY MODULE*
2	CE00107	VITE M 5X 12 ESAGONALE 5739	*M5X12 HEX SCREW*
3	SZ0.06601	PIASTRA FISSAGGIO BATTERIA CE 7,5 kWh	*7.5 kWh CE BATTERY MOUNTING PLATE*
4	AFN.00307	VITE M 8X 30 ESAGONALE 5739	*M 8X30 HEXAGONAL HEAD SCREW*
5	AFN.00361	RONDELLA 5,5-15X1,5	*WASHER 5,5-15X1,5*
6	AFN.00360	DADO M 5 AUTOBLOCK BASSO	*NUT M 5 LOW SELF-LOCKING*
7	CE00108	RONDELLA ELASTICA SPACCATA GROWER M 8	*M8 GROWER WASHER*
8	AFN.00350	RONDELLA 8,5-16X1,5	*WASHER 8,5-16X1,5*
9	AFN.02264	RONDELLA 5,3-10X1	*WASHER 5,3-10X1*
10	FM0.05553	SUPPORTO BMS GEN 2 LIBAL COMPLETO	*BMS GEN 2 LIBAL COMPLETE*
11	AFS.05011	BATTERY MANAGEMENT SYSTEM 2.0 LIBAL C-BMS24	*BATTERY MANAGEMENT SYSTEM 2.0*
12	AFS.06560	CABLAGGIO BATTERIA CE 7,5 KWH	*CE 7.5 kWh BATTERY WIRING HARNESS*
13	AFN.00106	DADO M 6 AUTOBLOCK BASSO	*NUT M6 LOW SELF-LOCKING*
14	AFN.00263	RONDELLA 6,5-18X1,6	*WASHER 6,5-18X1,6*
15	FVO.6557S	SUPPORTO BATTERIA CE 7,5 kWh SX NERO OPACO	*LH MATTE BLACK 7.5 kWh CE BATTERY BRACKET*
16	FVO.6557D	SUPPORTO BATTERIA CE 7,5 kWh DX NERO OPACO	*RH MATTE BLACK 7.5 kWh CE BATTERY BRACKET*
17	AFN.00233	VITE M 6X 20 ESAGONALE 5739	*M6X20 HEXAGONAL HEAD SCREW*
18	AFS.06558	LASTRA PLASTICA ANTIVIBRANTE BATTERIA CE 7,5 KWH	*BATTERY ANTI-VIBRATION PLASTIC PAD*
19	AFN.04179	VITE M 6X 40 ESAGONALE 5739	*M 6X 40 CYLINDER HEAD SCREW*
20	FM0.E0192	PRESA CARICABATTERIE CE CABLATA	*CE WIRED CHARGING PORT*
21	AFN.00105	RONDELLA 6,5-12X1,5	*WASHER 6,5-12X1,5*
22	AFN.00264	DADO M 6 AUTOBLOCK ALTO	*NUT M6 HIGH SELF-LOCKING*

CABLAGGI – WIRING HARNESSES – **LEGACY <2025**

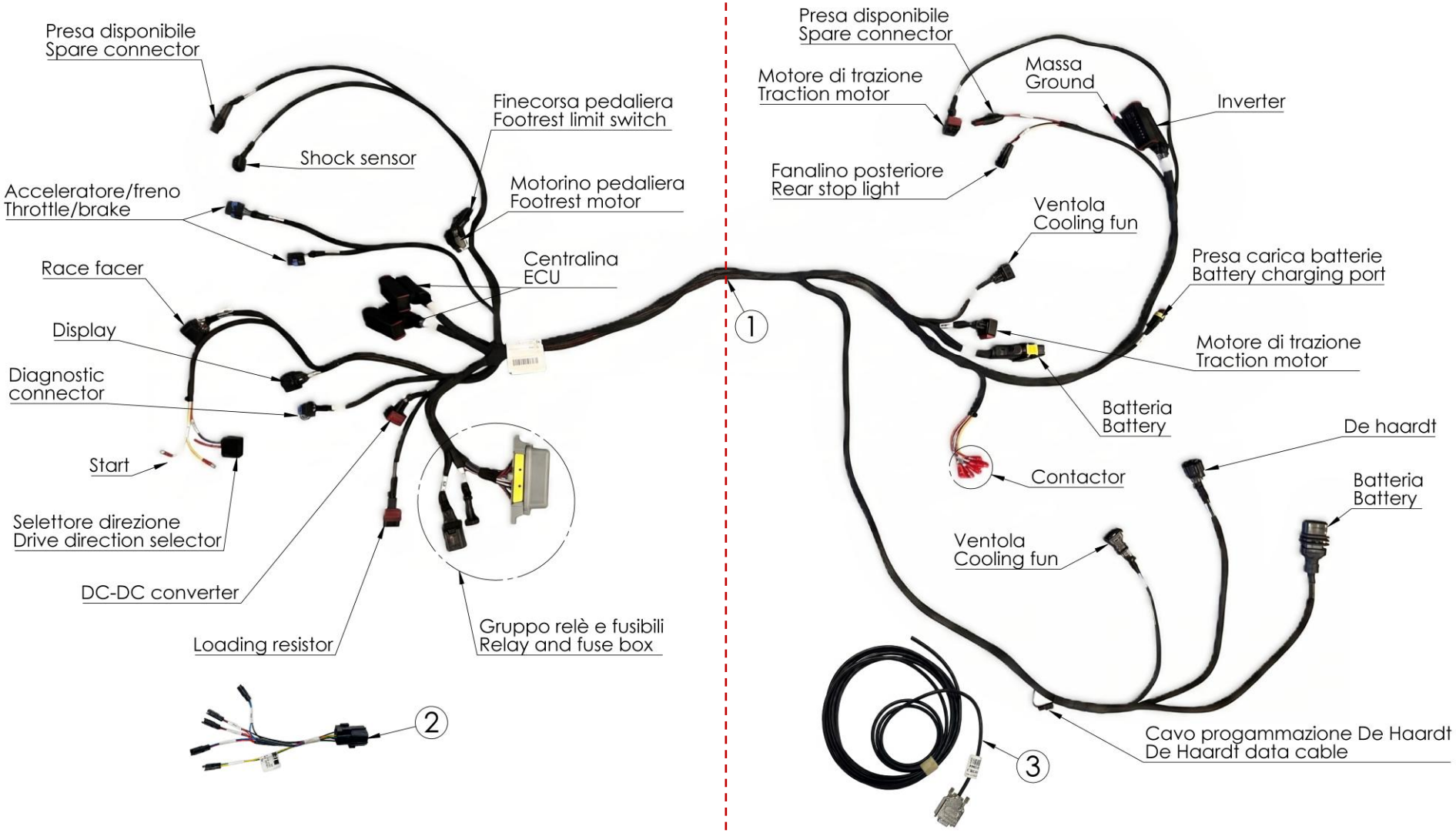

ANTERIORE - FRONT

POSTERIORE - REAR

POS.	COD.	DESCRIZIONE	*DESCRIPTION*
1	AFS.0556502	CABLAGGIO COMPLETO ELETTRONICA CE	*COMPLETE ELECTRIC WIRING HARNESS CE*
2	CE00201	CABLAGGIO VOLANTE CE	*STEERING WHEEL WIRING HARNESS*
3	FM0.06188	CAVO SERIALE CARICATORI ZIVAN	*SERIAL CABLE FOR ZIVAN CHARGERS*

CABLAGGI – WIRING HARNESSES

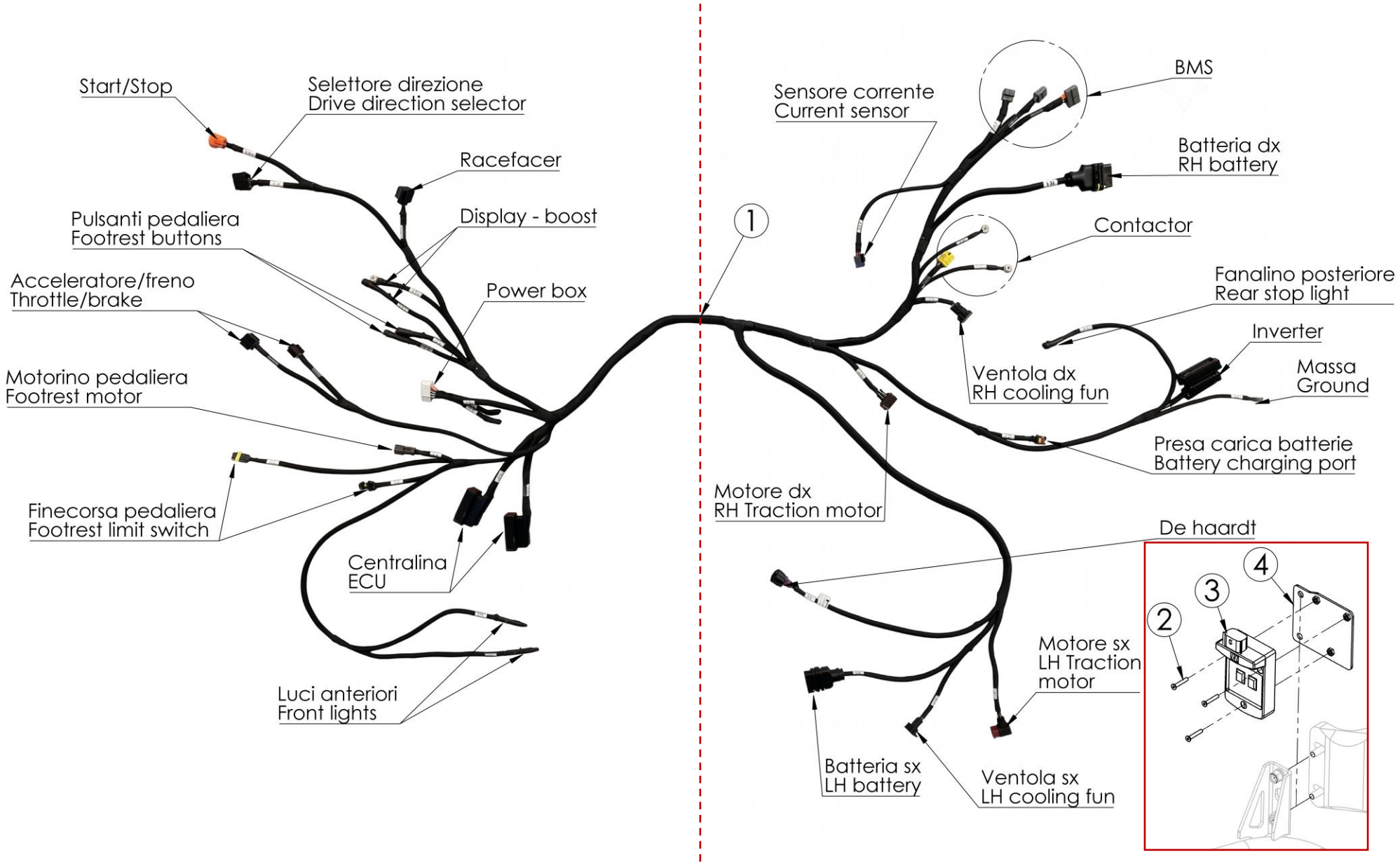

POS.	COD.	DESCRIZIONE	*DESCRIPTION*
1	AFS.06481	CABLAGGIO COMPLETO ELETTRONICA CE 72V	*CE 72V COMPLETE ELECTRONICS WIRING HARNESS*
2	AFN.05620	VITE M 4X 25 SVASATA 5933	*M 4X25 COUNTERSUNK HEAD SCREW*
3	AFS.05536	XTRA EV TRANSPONDER MK2	XTRA EV TRANSPONDER MK2
4	SZ0.04910	SUPPORTO TRANSPONDER DE HAARDT CE	CE DE HAARDT TRANSPONDER MOUNTING PLATE

KIT PARAURTI E SUPPORTI CARENE – BUMPER KIT AND FAIRING SUPPORT

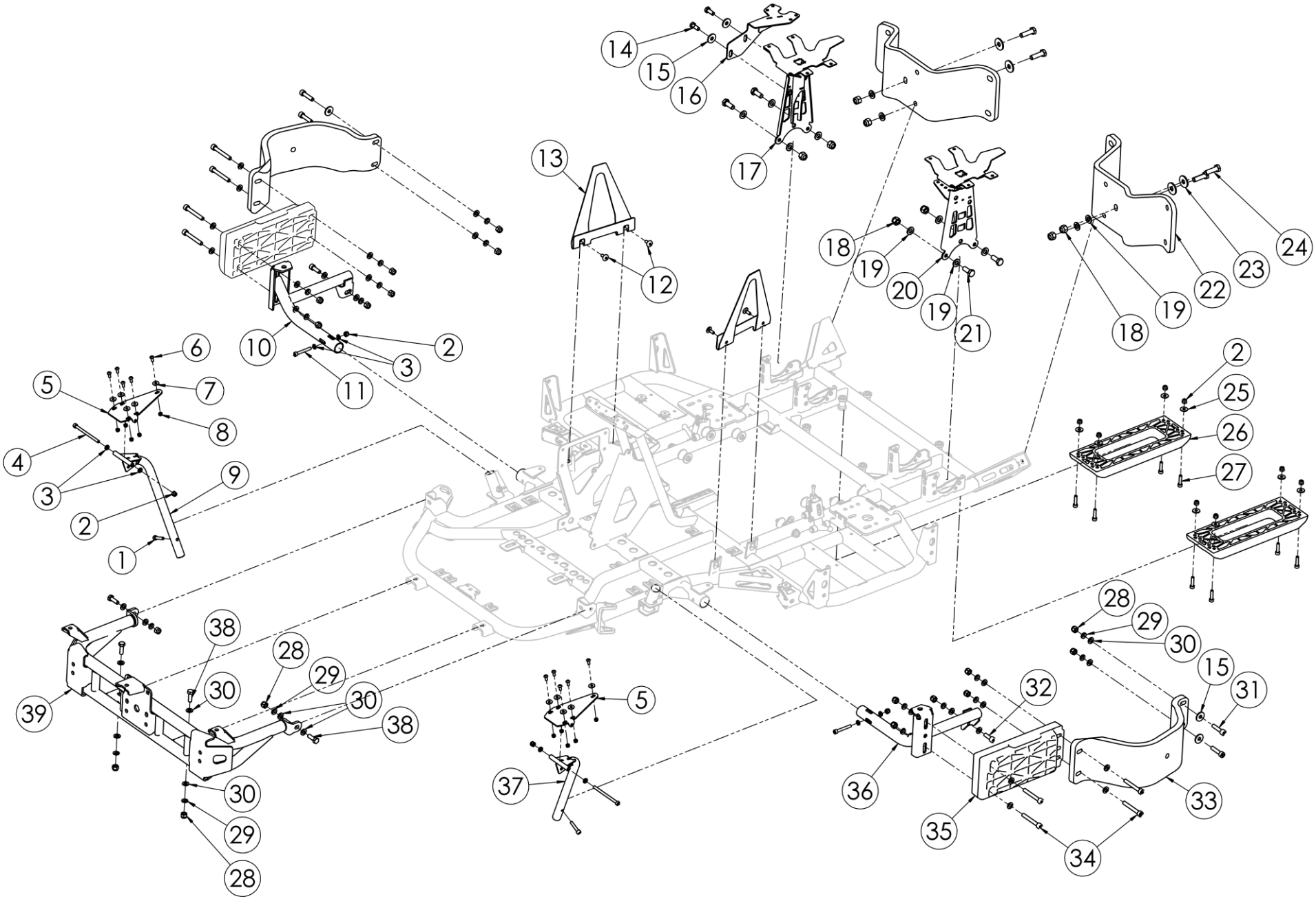

KIT PARAURTI E SUPPORTI CARENE – BUMPER KIT AND FAIRING SUPPORT

POS.	COD.	DESCRIZIONE	*DESCRIPTION*
1	AFN.00281	VITE M 6X 30 CILINDRICA 5931	M 6X30 SOCKET HEAD SCREW
2	AFN.00264	DADO M 6 AUTOBLOCK ALTO	*NUT M6 HIGH SELF-LOCKING*
3	AFN.00105	RONDELLA 6,5-12X1,5	*WASHER 6,5-12X1,5*
4	AFN.00404	VITE M 6X 90 CILINDRICA 5931	*M6X90 SOCKET HEAD SCREW*
5	SZ0.E1205	SUPPORTO PERNO ANT. CARENA LAT. CE	*SIDE FAIRING FRONT HINGE CE*
6	AFN.00359	VITE M 5X 12 BOMBATA 7380	*M 5X12 CONVEX HEAD SCREW*
7	AFN.00361	RONDELLA 5,5-15X1,5	*WASHER 5,5-15X1,5*
8	AFN.00360	DADO M 5 AUTOBLOCK BASSO	*NUT M 5 LOW SELF-LOCKING*
9	SC0.E1203D	SUPPORTO CARENA LAT. BASCULANTE CE DX	*CE RIGHT SIDE FAIRING MOUNT TUBE*
10	SZE.3368D	PARAURTI LATERALE CENT/CE DX	*CENT/CE RIGHT BUMPER FRAME*
11	AFN.02035	VITE M 6X 45 CILINDRICA 5931	*M6X45 SOCKET HEAD SCREW*
12	AFS.00261	VITE TESTA TONDA LARGA M 6X 16 PIANALE	*FLOOR TRAY SCREW LARGE ROUND HEAD M6X16*
13	SZ0.E1233	PROFILO Y LARGO (CHIUSURA BASCULANTE) CE	*CE Y LARGE PROFILE*
14	AFN.00909	VITE M 8X 20 ESAGONALE	*M8X20 HEXAGONAL HEAD SCREW*
15	AFN.02415	RONDELLA 8,5-24X2	*8,5-24X2 WASHER*
16	SZ0.E1400	SUPPORTO PRESA CARICA BATTERIA CE	*BATTERY PLUG STAND CE*
17	SZ0.5910D	SUPPORTO CARENA POSTERIORE CE FISSO DX	*REAR FAIRING RAPID FASTENER MOUNT FIXED CE RH*
18	AFN.02393	DADO M10 AUTOBLOCK ALTO	*NUT M10 HIGH SELF-LOCKING*
19	AFN.01637	RONDELLA 10,5-20X2	*WASHER 10,5-20X2*
20	SZ0.5910S	SUPPORTO CARENA POSTERIORE CE FISSO SX	*REAR FAIRING RAPID FASTENER MOUNT FIXED CE LF*
21	AFN.02845	VITE M10X 25 ESAGONALE 5739	*M10X25 HEXAGONAL HEAD SCREW*
22	AFS.02166	BALESTRA POSTERIORE CENTURION	*REAR LEAF SPRING CENT*
23	AFN.00125	RONDELLA 10,5-30X2,5	*WASHER 10,5-30X2,5*
24	TES.10X035	VITE M10X 35 ESAGONALE 5739	*M10X35 HEXAGONAL HEAD SCREW*
25	AFN.00263	RONDELLA 6,5-18X1,6	*WASHER 6,5-18X1,6*
26	AFS.03419	PARADISCO PARAPULEGGIA CENT STAMPATO	*CENTURION DISC AND PULLEY PLATE*
27	AFN.00478	VITE M 6X 25 CILINDRICA 5931	*M 6X25 SOCKET HEAD SCREW*
28	AFN.00128	DADO M 8 AUTOBLOCK ALTO	*NUT M8 HIGH SELF-LOCKING*
29	CE00108	RONDELLA ELASTICA SPACCATA GROWER M 8	*M8 GROWER WASHER*
30	AFN.00350	RONDELLA 8,5-16X1,5	*WASHER 8,5-16X1,5*
31	AFN.02153	VITE M 8X 35 CILINDRICA 5931	*M 8X35 SOCKET HEAD SCREW*
32	AFN.00732	VITE M 8X 25 CILINDRICA 5931	*M 8X25 SOCKET HEAD SCREW*
33	AFS.03285	BALESTRA LATERALE DX/SX CE	*SIDE LEAF SPRING RH/LF CENT EL*
34	AFN.02311	VITE M 8X 60 CILINDRICA 5931	*M8X60 SOCKET HEAD SCREW*
35	AFS.03867	BASE PROTEZIONE CENT STAMPATA	*CENTURION MOLDED BASE PROTECTION*
36	SZE.3368S	PARAURTI LATERALE CENT/CE SX	*CENT/CE LEFTBUMPER FRAME*
37	SC0.E1203S	SUPPORTO CARENA LAT. BASCULANTE CE SX	*CE LEFTSIDE FAIRING MOUNT TUBE*
38	AFN.00107	VITE M 8X 25 ESAGONALE 5739	*M 8X25 HEXAGONAL HEAD SCREW*
39	SZE.02078	PARAURTI ANTERIORE CENTURION	*FRONT BUMPER FRAME CENT*

PROTEZIONI LATERALI E POSTERIORI – SIDE AND REAR BUMPERS

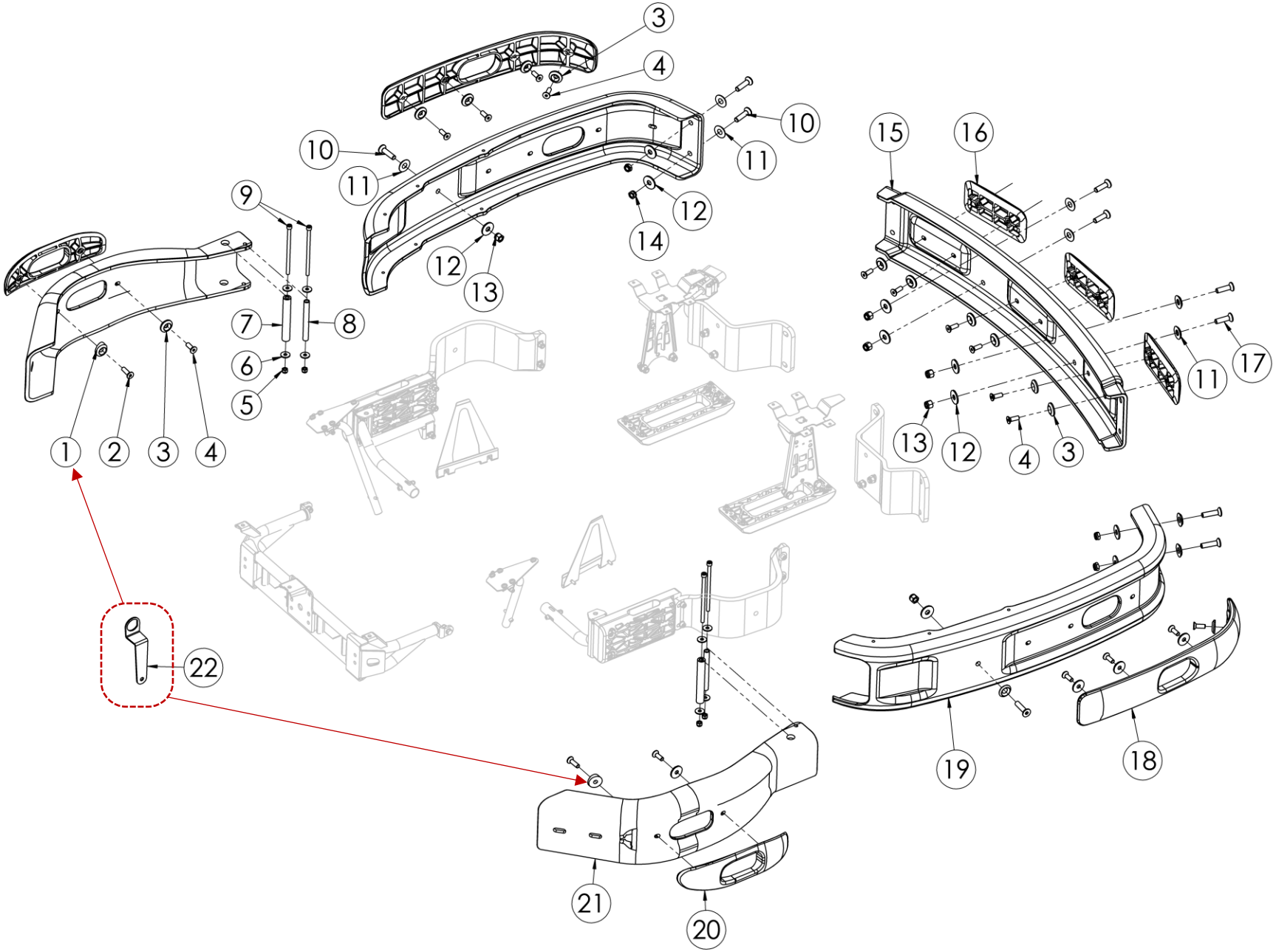

POS.	COD.	DESCRIZIONE	DESCRIPTION
1	SL1.03223	RONDELLA 10 SVASATA INCLINATA	COUNTERSUNK WASHER M10 INCLIN
2	TSV.10X035	VITE M10X 35 SVASATA 5933	*M10X35 COUNTERSUNK HEAD SCREW*
3	SL1.03222	RONDELLA 10 SVASATA	*COUNTERSUNK WASHER M10*
4	TSV.10X030	VITE M10X 30 SVASATA 5933	*M10X 30 COUNTERSUNK HEAD SCREW*
5	AFN.00128	DADO M 8 AUTOBLOCK ALTO	*NUT M8 HIGH SELF-LOCKING*
6	AFN.02415	RONDELLA 8,5-24X2	*8,5-24X2 WASHER*
7	SZ0.00611	BUSSOLA FASCIA PARACOLPI LAT.POST.CENT	*CENTURION REAR BUSHING LINEAR FOR LAT. BUMPER*
8	SZ0.00597	BUSSOLA FASCIA PARACOLPI LAT.ANT.CENT 14	*CENTURION FRONT BUSHING LINER FOR LAT. BUMPER*
9	AFN.02801	VITE M 8X150 CILINDRICA 5931	*M 8X150 SOCKET HEAD SCREW*
10	AFN.02294	VITE M12X 50 SVASATA 5933	*M12X50 COUNTERSUNK HEAD SCREW*
11	SZ0.02367	RONDELLA 12 SVASATA BULLONE CENT	*CENTURION COUNTERSUNK BOLT M12 WASHER*
12	SZ0.E1082	RONDELLA 10 -22X5 CE	*10X22X5 WASHER*
13	AFN.02393	DADO M10 AUTOBLOCK ALTO	*NUT M10 HIGH SELF-LOCKING*
14	AFN.02394	DADO M12 AUTOBLOCK BASSO	*M12 LOW SELF-LOCKING NUT*
15	AFS.02160	FASCIA PARACOLPI CENTRALE POST.CENTURION	*REAR-CENTRAL BUFFER BAND CENT*
16	AFS.00570NERO	PLACCA PARACOLPI POSTERIORE CENT NERO	*PLASTIC PLATE REAR CENT*
17	AFN.03561	VITE M12X 45 SVASATA 5933	*M12X 45 COUNTERSUNK HEAD SCREW*
18	AFS.01455NERO	PLACCA PARACOLPI LATERALE POST.CENT NERO	*PLASTIC PLATE REAR SIDE CENT*
19	AFS.2160DS	FASCIA PARACOLPI LAT. POST. DX/SX CENT	*CENTURION REAR SIDE BUFFER BAND RH/LF*
20	AFS.01285NERO	PLACCA PARACOLPI LATERALE ANT.CENT NERO	*PLASTIC PLATE FRONT SIDE CENT*
21	AFS.3149DS	FASCIA PARACOLPI LAT. ANT. DX/SX CENT STD	*CENTURION FRONT SIDE BUFFER BAND RH/LF*
22	SZ0.03227	CHIAVE RONDELLA SVASATA INCLINATA	*COUNTERSUNK WASHER KEY (BUMPER TOOL)*

PROTEZIONE ANTERIORE – FRONT BUFFER

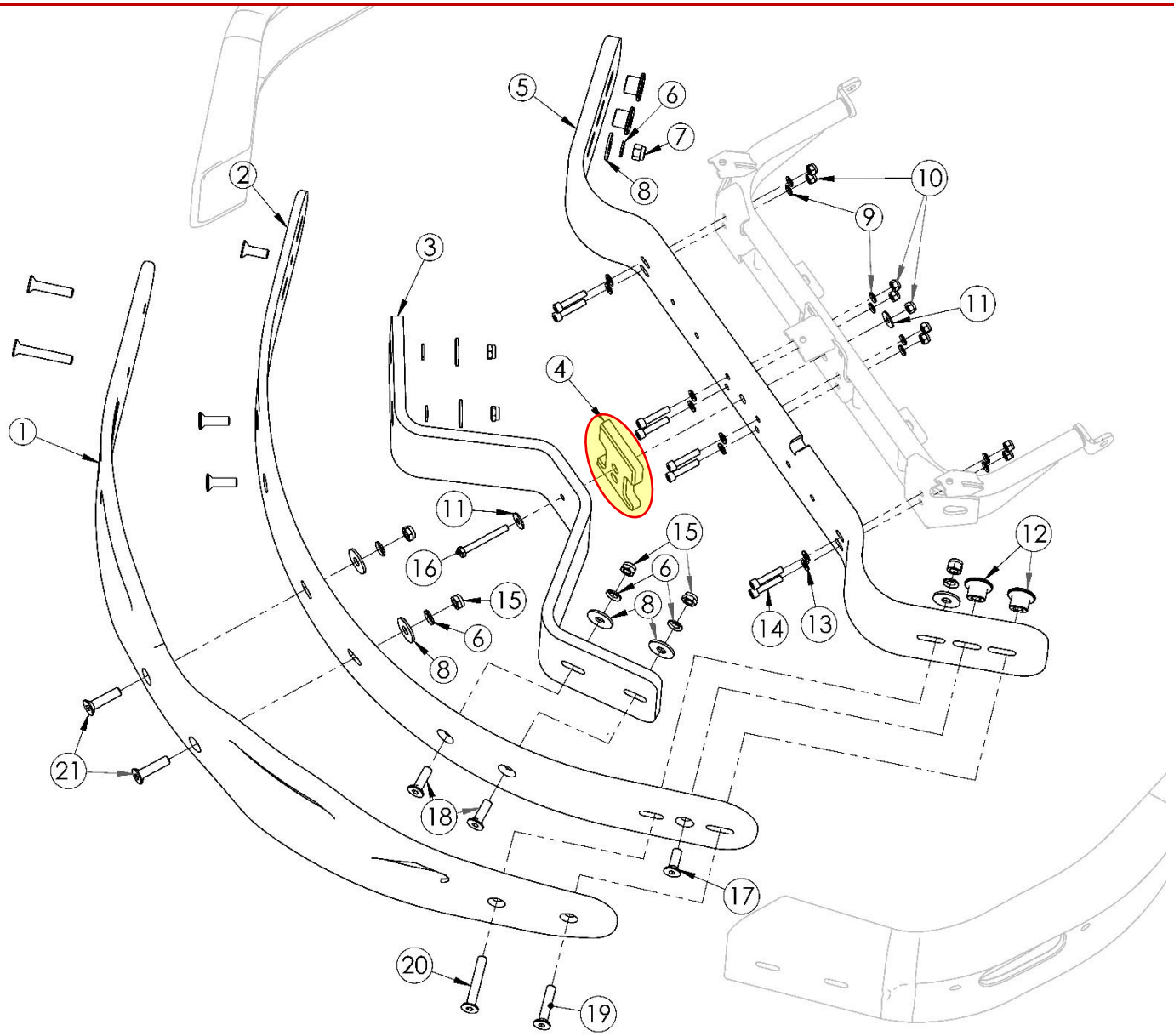

NR.4 ATTENTION!

SMALL SILENTBLOCK

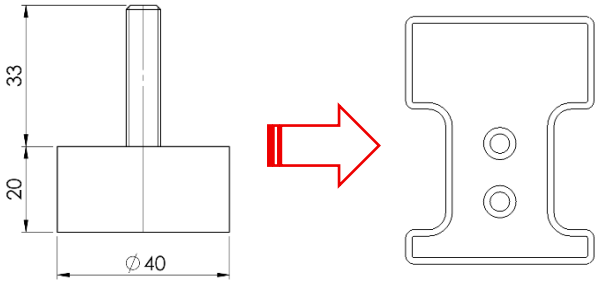

AFS.04894 replaced with AFS.06680

BIG SILENTBLOCK

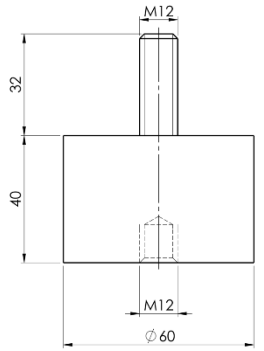

AFS.02509

POS.	COD.	DESCRIZIONE	DESCRIPTION
1	AFS.04911	FASCIA PARAURTI ANTERIORE CENT CON PROTEZ. PEDALI	*CENTURION FRONT BUFFER BAND WITH SIDE PROTECTION*
2	AFS.0216305	FASCIA PARACOLPI CENTRALE ANT.INT CENT	*INT.FRONT-CENTRAL BUFFER BAND CENT*
3	AFS.0315402	BALESTRA ANTERIORE CENTURION	*FRONT LEAF SPRING CENT*
4	AFS.06680	DISTANZIALE FISSAGGIO BALESTRA ANTERIORE CENT	*FRONT LEAF SPRING CLAMP SPACER CENT*
5	AFS.0216109	BALESTRA ANTERIORE CENTRALE CENTURION	*FRONT-CENTRAL LEAF SPRING CENT*
6	AFN.03734	RONDELLA ELASTICA SPACCATA GROWER M12	*M12 GROWER WASHER*
7	AFN.02364	DADO M12 AUTOBLOCK ALTO	*M12 HIGH SELF-LOCKING NUT*
8	SZ0.E1082	RONDELLA 10 -22X5 CE	*10X22X5 WASHER*
9	CE00108	RONDELLA ELASTICA SPACCATA GROWER M 8	*M8 GROWER WASHER*
10	AFN.00128	DADO M 8 AUTOBLOCK ALTO	*NUT M8 HIGH SELF-LOCKING*
11	AFN.02415	RONDELLA 8,5-24X2	*8,5-24X2 WASHER*
12	SZ0.00701	DADO M12 OVALE 14X25	*SPECIAL NUT M12 14X25*
13	AFN.00350	RONDELLA 8,5-16X1,5	*WASHER 8,5-16X1,5*
14	AFN.00132	VITE M 8X 40 CILINDRICA 5931	*M8X40 SOCKET HEAD SCREW*
15	AFN.02394	DADO M12 AUTOBLOCK BASSO	*M12 LOW SELF-LOCKING NUT*
16	AFN.00914	VITE M 8X 70 ESAGONALE 5739 TUTTO FILETTO	*M 8X70 HEXAGONAL HEAD SCREW*
17	AFN.03610	VITE M12X 35 SVASATA 5933	*M12X 35 COUNTERSUNK HEAD SCREW*
18	AFN.02293	VITE M12X 40 SVASATA 5933	*M12X40 COUNTERSUNK HEAD SCREW*
19	AFN.00676	VITE M12X 60 SVASATA 5933	*M12X60 COUNTERSUNK HEAD SCREW*
20	AFN.02373	VITE M12X 80 SVASATA 5933	*M12X80 COUNTERSUNK HEAD SCREW*
21	AFN.02294	VITE M12X 50 SVASATA 5933	*M12X50 COUNTERSUNK HEAD SCREW*

KIT CARENE – FAIRING KIT

>2024: AFS.04702



<2024: AFS.06170



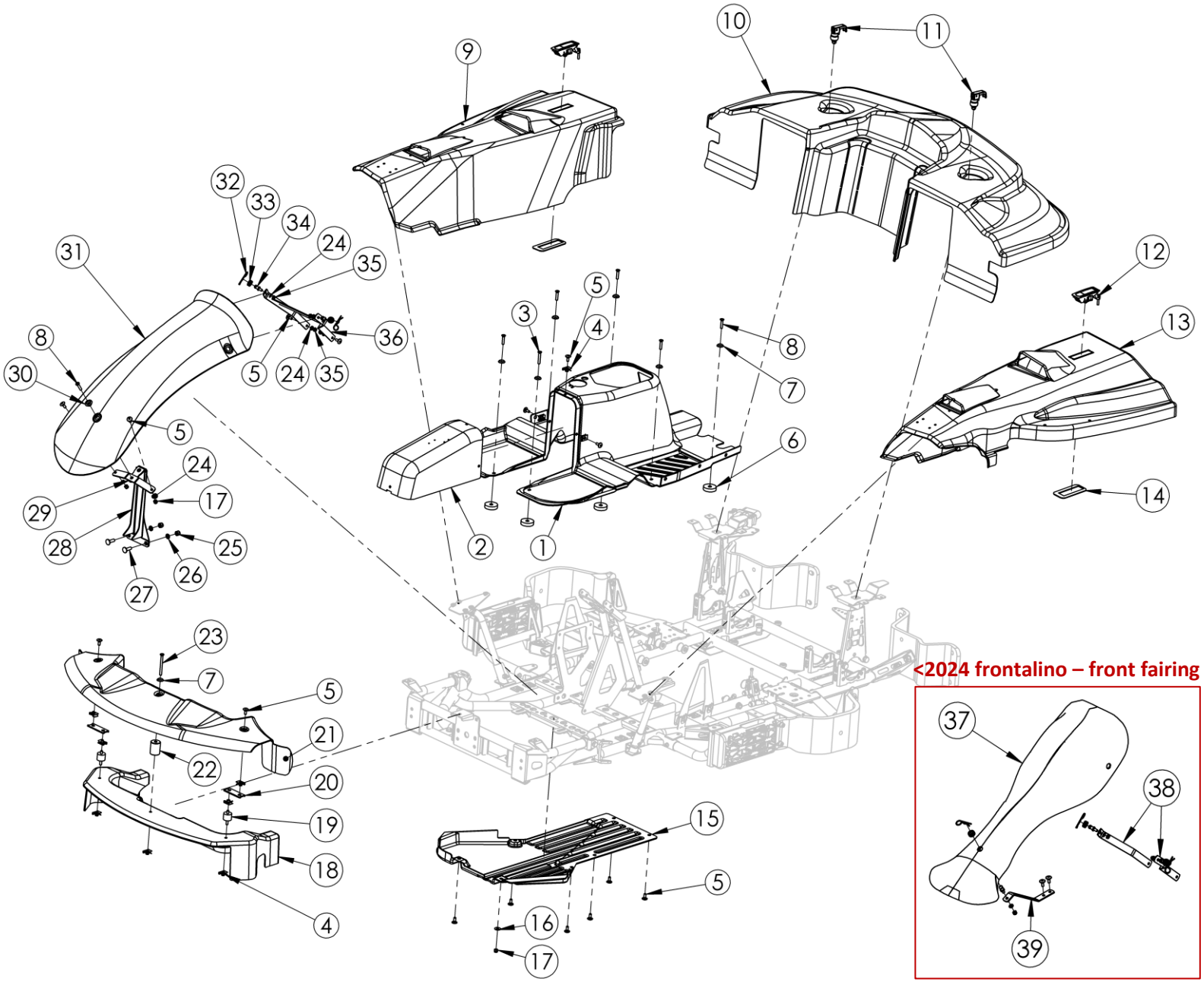

<2024 frontalino – front fairing

POS.	COD.	DESCRIZIONE	*DESCRIPTION*
1	AFS.03283	CARENA PIANALE CE	CE FLOOR TRAY
2	AFS.03284	PROTEZIONE POMPA FRENO CE	*MASTER CYLINDER COVER CE*
3	TSV.06X040	VITE M 6X 40 SVASATA 5933	*M 6X 40 COUNTERSUNK HEAD SCREW*
4	AFS.02327	CLIPS PRESTOLA M6 CENTURION	*CENTURION CLIPS M6 FOR FITTING*
5	AFS.00261	VITE TESTA TONDA LARGA M 6X 16 PIANALE	*FLOOR TRAY SCREW LARGE ROUND HEAD M6X16*
6	AFS.00088	GOMMINO CULLA MARMITTA	*EXHAUST CRADLE RUBBER*
7	SAN.00249	RONDELLA 6 SVASATA NERA	*WASHER 6 COUNTERSUNK BLACK*
8	AFN.00499	VITE M 6X 30 SVASATA 5933	*M 6X30 CONTERSUNK HEAD SCREW*
9	AFS.4265D04	CARENA LATERALE CE BASCULANTE DX	*CE RIGHT SIDE FAIRING*
10	AFS.03282	CARENA POSTERIORE CE	*REAR FAIRING*
11	CE00235	GANCIO RAPIDO M8 CE	*M8 FAST LOCK*
12	AFS.05114	SGANCIO RAPIDO CARENA CE SOUTHCO C2-32-35	*LATERAL FAIRING FAST UNLOCK*
13	AFS.4265S04	CARENA LATERALE CE BASCULANTE SX	*CE LEFT SIDE FAIRING*
14	AML.05178	RINFORZO SGANCIO RAPIDO CARENA CE	*LATERAL FAIRING FAST UNLOCK BACKET*
15	AFS.02745	CARTER PROTEZIONE CARRELLO PEDALE CENT	*CENT FOOTREST PROTECTION FAIRING*
16	AFN.00263	RONDELLA 6,5-18X1,6	*WASHER 6,5-18X1,6*
17	AFN.00264	DADO M 6 AUTOBLOCK ALTO	*NUT M6 HIGH SELF-LOCKING*
18	AFS.0216807	PROTEZIONE PARAURTI ANTERIORE CENTURION	*CENT FRONT BUMPER PROTECTION*
19	AFS.02296	SILENTBLOCK M+M M 6 Ø25X20 CENTURION	*SILENTBLOCK M+M M 6 25X20 CENT*
20	SZ0.02511	PIASTRA SILENTBLOCK SPOILER DX/SX CENT	*SPOILER RH/LF SILENTBLOCK PLATE CENT*
21	AFS.04455	SPOILER ANTERIORE HERCULES	*FRONT SPOILER HERCULES*
22	SL1.04623	SPESSORE SPOILER Ø6,5-30X40	*NYLON SPOILER SPACER Ø6.5-30X40*
23	AFN.02322	VITE M 6X 70 SVASATA 5933	*M 6X 70 COUNTERSUNK HEAD SCREW*
24	AFN.00105	RONDELLA 6,5-12X1,5	*WASHER 6,5-12X1,5*
25	AFN.00128	DADO M 8 AUTOBLOCK ALTO	*NUT M8 HIGH SELF-LOCKING*
26	CE00108	RONDELLA ELASTICA SPACCATA GROWER M 8	*M8 GROWER WASHER*
27	AFN.05528	VITE M 8X 25 TESTA TONDA QUADRO SOTTOTES.TUTTO FIL	*M8X25 CUP HEAD SQUARE NECK SCREW*
28	FK0.06257	SUPPORTO FRONTALINO ANTERIORE CENT KG 507 + RIVET.	*FRONT FAIRING BRACKET CENT KG 507*
29	SZ0.06348	RINFORZO SUPPORTO FRONTALINO KG 507/508	*507 FRONT FAIRING SUPPORT*
30	SAN.06349	DISTANZIALE A CAPPELLO SVASATO M6 Ø23 NERO	*M6 SPACER FRONT FAIRING 507*
31	AFS.05867SOFT	FRONTALINO 507 CHIUSO CIK/FIA SOFT NERO	*FRONT FAIRING BLACK 507 SOFT*
32	SZ0.00102	SPINA ELASTICA SUPPORTO FRONTALINO	*FRONT FAIRING ELASTIC PIN*
33	AFS.04522	GOMMINO SUPPORTO FRONTALINO KG	*FRONT FAIRING RUBBER KG*
34	SBN.00103	PERNO SUPPORTO FRONTALINO INFERIORE	*FRONT FAIRING SUPPORT PIVOT BLACK*
35	AFN.00106	DADO M 6 AUTOBLOCK BASSO	*NUT M6 LOW SELF-LOCKING*
36	SC0.E1053	SUPPORTO FRONTALINO SUPERIORE CE	*CE FRONT FAIRING MOUNT*
37	AFS.06235	FRONTALINO NA3 MORBIDO NERO	*SOFT BLACK FRONT FAIRING*
38	SC0.E1053	SUPPORTO FRONTALINO SUPERIORE CE	*CE FRONT FAIRING MOUNT*
39	SC0.02271	SUPPORTO FRONTALINO INFERIORE CENT	*FRONT FAIRING SUPPORT BUTTOM CENT*
40	AFS.06678	KIT ADESIVI CENTURION ELETTRICO 2024	E-DRENALINE STICKERS KIT
41	AFS.06170	KIT ADESIVI CENTURION ELETTRICO 2022	*E-DRENALINE STICKERS KIT VS.02*

GRUPPO SEDILE COMPLETO – SEAT UNIT ASSEMBLY

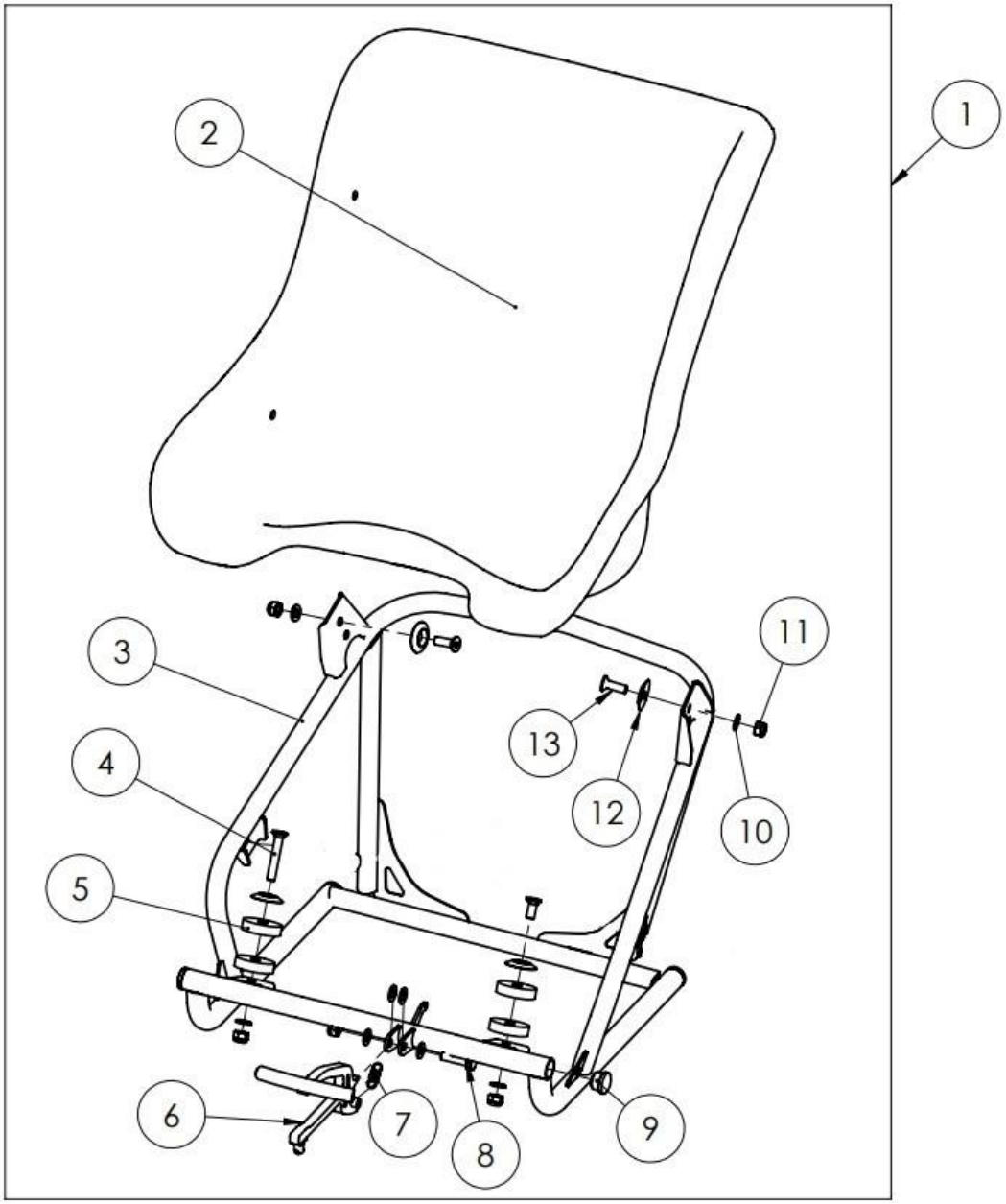

GRUPPO SEDILE COMPLETO – SEAT UNIT ASSEMBLY

POS.	COD.	DESCRIZIONE	DESCRIPTION
1	CE.DIST.010	CE 1.0 GRUPPO SEDILE STD	*SEAT UNIT ASSY*
2	AFS.02867	SEDILE IN PLASTICA SP.7 CENTURION	*CENTURION SP 7MM PLASTIC SEAT*
3	SC0.01901	CARRELLO SEDILE CE STANDARD	*SEAT TROLLEY CENT ELECTRIC*
4	AFN.00912	VITE M 8X 50 SVASATA 5933	*M 8X50 COUNTERSUNK HEAD SCREW*
5	AFS.00088	GOMMINO CULLA MARMITTA	*EXHAUST CRADLE RUBBER*
6	SC0.E1390	LEVA FISSAGGIO CARRELLO SEDILE CE	*CE SEAT FRAME LEVER*
7	SZ0.E0052	MOLLA LEVA CARRELLO SEDILE CE	*CE SEAT FRAME SPRING*
8	AFN.00307	VITE M 8X 30 ESAGONALE 5739	*M 8X30 HEXAGONAL HEAD SCREW*
9	AFS.01119	TAPPINO SUPPORTO MARMITTA CRG/ROTAX	*EXHAUST SUPPORT CAP CRG/ROTAX*
10	AFN.00108	RONDELLA 8,5-18X2	*WASHER 8,5-18X2*
11	AFN.00128	DADO M 8 AUTOBLOCK ALTO	*NUT M8 HIGH SELF-LOCKING*
12	FAN.00260	RONDELLA 8 SEDILE ALL.NERA	*ALUMINUM SEAT WASHER BLACK 8*
13	AFN.00145	VITE M 8X 25 SVASATA 5933	*M8X25 COUNTERSUNK HEAD SCREW*

KIT ROLLBAR E-DRENALINE

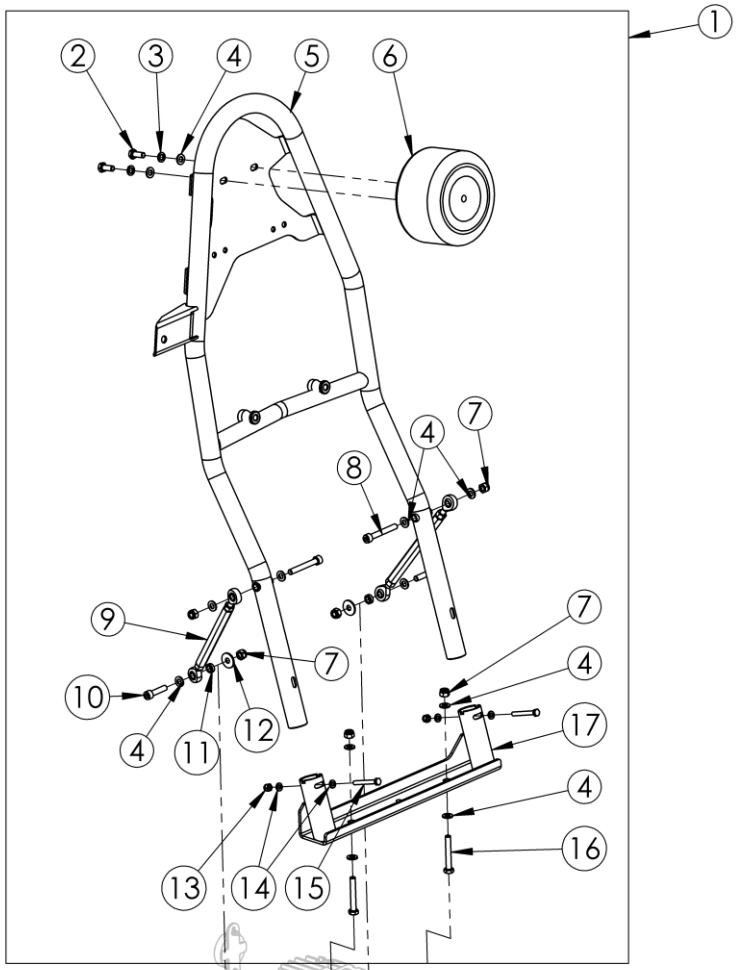

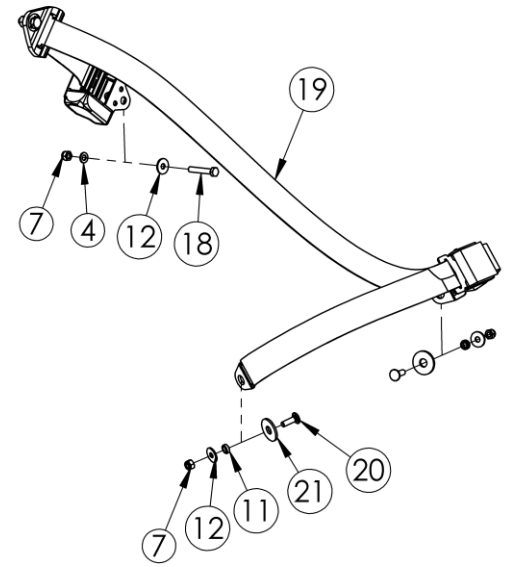

SEAT BELT 4 POINTS <2025

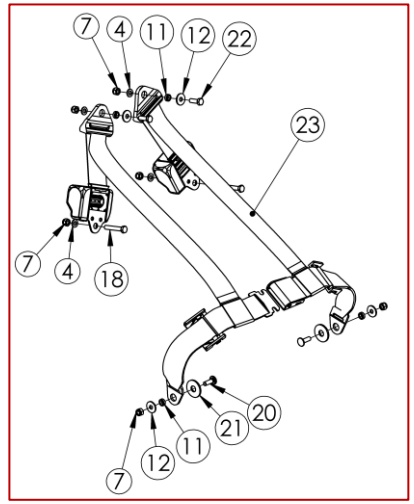

POS.	COD.	DESCRIZIONE	*DESCRIPTION*
1	FK0.05010	ROLLBAR + KIT APPLICAZIONE E-DRENALINE CE	ROLLBAR KIT E-DRENLINE CE
2	AFN.00909	VITE M 8X 20 ESAGONALE	*M8X20 HEXAGONAL HEAD SCREW*
3	CE00108	RONDELLA ELASTICA SPACCATA GROWER M 8	*M8 GROWER WASHER*
4	AFN.00350	RONDELLA 8,5-16X1,5	*WASHER 8,5-16X1,5*
5	SC0.E0081	ROLLBAR CE	*E-DRENALINE ROLLBAR*
6	AFS.05760	POGGIATESTA CRG RENT TONDO STAMPATO	*PADDED HEADREST CRG RENT*
7	AFN.00128	DADO M 8 AUTOBLOCK ALTO	*NUT M8 HIGH SELF-LOCKING*
8	AFN.02311	VITE M 8X 60 CILINDRICA 5931	*M8X60 SOCKET HEAD SCREW*
9	FK0.01808	BARRETTA ESA CRG COMPLETA 16,5	*HEX TRACK ROD CM.16,5*
10	TCI.08X080	VITE M 8X 80 CILINDRICA	*M 8X 80 SOCKET HEAD SCREW*
11	FBN.00252	SPESSORE 8,5-14X 5 BARRETTA	*ROD SPACER 8,5-14X5 TRACK ROD*
12	AFN.02415	RONDELLA 8,5-24X2	*8,5-24X2 WASHER*
13	AFN.00264	DADO M 6 AUTOBLOCK ALTO	*NUT M6 HIGH SELF-LOCKING*
14	AFN.00105	RONDELLA 6,5-12X1,5	*WASHER 6,5-12X1,5*
15	AFN.00280	VITE M 6X 50 ESAGONALE 5739	*M 6X 50 HEXAGONAL HEAD SCREW*
16	TES.08X055	VITE M 8X 55 ESAGONALE 5739	*M 8X 55 HEXAGONAL HEAD SCREW*
17	SZ0.E1083	SUPPORTO ROLLBAR CE	*E-DRENALINE ROLLBAR MOUNT*
18	AFN.00443	VITE M 8X 50 ESAGONALE 5739	*M 8X50 HEXAGONAL HEAD SCREW*
19	AFS.06891	CINTURA SICUREZZA 3 PUNTI RENTAL	*SEAT BELT 3 POINTS*
20	AFN.05528	VITE M 8X 25 TESTA TONDA QUADRO SOTTOTES.TUTTO FIL	*M8X25 CUP HEAD SQUARE NECK SCREW*
21	SZ0.E1082	RONDELLA 10 -22X5 CE	*10X22X5 WASHER*
22	AFN.00107	VITE M 8X 25 ESAGONALE 5739	*M 8X25 HEXAGONAL HEAD SCREW*
23	AFS.0534302	CINTURA SICUREZZA 4 PUNTI RENTAL	*SEAT BELT 4 POINTS*

TUTA KART E CASCO – RACING SUIT AND HELMET



POS.	COD.	DESCRIZIONE	*DESCRIPTION*
1	XXX.XXXX	TUTA KART CRG-SPARCO	CRG-SPARCO RACING SUIT
2	XXX.XXXX	CASCO INTEGRALE CON VISIERA	FULL FACE HELMET WITH VISOR
3	XXX.XXXX	CASCO APERTO	OPEN HELMET

OPTIONAL RIDUZIONE SEDILE IN GOMMA – OPTIONAL RUBBER SEAT REDUCTION





OPTIONAL RIDUZIONE SEDILE IN GOMMA – OPTIONAL RUBBER SEAT REDUCTION

POS.	COD.	DESCRIZIONE	DESCRIPTION
1	AFS.00746	RIDUZIONE SEDILE CENTURION	*ADJUSTABLE RUBBER SEAT CENT*

CRG



DRENALINE

CRG Srl - Via Mantova 4F – 25017 – Lonato del Garda (BS) - Tel. +39.030.9912604 - E-mail: rental@kartcrg.com