CRG

Catalogo
Catalogue

2026



CENTURION

Rel 156

CENTURION



DICHIARAZIONE DI CONFORMITA'

CE

Il fabbricante C.R.G. S.r.l.
Via Mantova, 4F/G 25017 Lonato del Garda (BS) Italia

dichiara che la macchina

Denominazione: Kart da noleggio Tipo B
Funzione: Kart progettato e costruito per noleggio
Modello: CENTURION
Matricola n.:

è stata sviluppata e prodotta in conformità alle seguenti disposizioni:

Direttiva Macchine 2006/42/CE

Principali norme applicate:

UNI EN 16230-1 : 2015 Kart da noleggio – Requisiti di sicurezza e metodi di prova per kart

UNI EN ISO 12100 : 2010 Sicurezza del macchinario – Principi generali di progettazione - Valutazione del rischio e riduzione del rischio.

UNI EN ISO 3744 : 2010 Acustica – Determinazione dei livelli di potenza sonora delle sorgenti di rumore mediante misurazione della potenza sonora

EN ISO 4871 Acustica - Dichiarazione e verifica dei valori di emissione sonora in macchinari e attrezzature

UNI EN ISO 11202 : 2010 Acustica – Rumore emesso dalle macchine e dalle apparecchiature. Determinazione dei livelli di pressione sonora di emissione al posto di lavoro e in altre specifiche posizioni applicando correzioni ambientali approssimate.

UNI EN ISO 5349-1: 2004 Vibrazioni meccaniche – Misurazione e valutazione dell'esposizione dell'uomo alle vibrazioni trasmesse alla mano

Persona autorizzata a costituire il Fascicolo Tecnico: Luca Bravo
c/o CRG Srl Via Mantova, 4F/G - 25017 Lonato del Garda (BS) Italia

Marina Vanaria
Legale rappresentante

C.R.G. S.r.l. Via MANTOVA 4F/G 25017 LONATO Del GARDA (BS) ITALY- Tel. +39 030-9910804 - Fax +39 030-9913714 P.IvaC.F 00580340310 Cap.Soc. € 510.000,00 i.v.s



DECLARATION OF CONFORMITY

CE

The manufacturer C.R.G. S.r.l.
Via Mantova, 4F/G 25017 Lonato del Garda (BS) Italia

declares that the vehicle

Denomination: Rental kart Type B
Function: Kart designed and constructed for rental use
Model: CENTURION
Year of production:
Serial code n.:

was developed and produced in compliance with the following regulations:

Car directive 2006/42/CE

Principle norms applicable:

UNI EN 16230-1 : 2015 Rental kart – Prescriptions for safety and test methods applicable for kart

UNI EN ISO 12100 : 2010 Safety of machinery – General principles for design. Risk assessment and risk reduction

UNI EN ISO 3744 : 2010 Acoustics - Determination of sound power levels of noise source by measuring sound output

EN ISO 4871 Acoustic – Declaration and verification of noise emission values on machinery and equipment

UNI EN ISO 11202 : 2010 Acoustics - Noise emitted by machinery and equipment. Determination of emission sound pressure levels at a work station and at other specified positions applying approximate environmental corrections

UNI EN ISO 5349-1: 2004 Mechanical vibration - Measurement and evaluation of human exposure to hand-transmitted vibration

Person authorized to compile the Technical File:

Luca Bravo
c/o CRG Srl Via Mantova, 4F/G - 25017 Lonato del Garda (BS) Italia

Marina Vanaria
Legal representative

C.R.G. S.r.l. Via MANTOVA 4F/G 25017 LONATO Del GARDA (BS) ITALY- Tel. +39 030-9910804 - Fax +39 030-9913714 P.IvaC.F 00580340310 Cap.Soc. € 510.000,00 i.v.s

INDICE - INDEX

SCOCCA – FRAME 7
BARRETTA E FUSELLO – TRACK ROD AND STUBBLE - **LEGACY** 9
BARRETTA E FUSELLO – TRACK ROD AND STUBBLE 11
PARAFANGO – FENDER 13
PIANTONE STERZO – STEERING COLUMN 15
TUBOLARE PEDALE – PEDAL TUBE 17
KIT STERZO DIRETTO COMPLETO – COMPLETE STEERING KIT – **LEGACY<2025** 19
KIT STERZO DIRETTO COMPLETO – COMPLETE STEERING KIT – **LEGACY<2025** 20
KIT STERZO DIRETTO COMPLETO – COMPLETE STEERING KIT 21
KIT STERZO DIRETTO COMPLETO – COMPLETE STEERING KIT 22
PEDALE ACCELERATORE – THROTTLE PEDAL – **LEGACY <2025** 23
PEDALE FRENO – BRAKE PEDAL – **LEGACY <2025** 25
CARRELLO PEDALE – PEDAL SLIDER – **LEGACY< 2025** 27
PEDALIERA – FOOTREST 29
GUIDE COMPLETE PEDALIERA – COMPLETE FOOTREST SLIDERS 31
PARTE CENTRALE CARRELLO – CENTRAL SLIDER PART 33
PEDALI – PEDALS 35
POMPA FRENO – MASTER CYLINDER 37
POSIZIONATORE PEDALE – PEDAL LOCATOR 39
BLOCCO CARRELLO PEDALE - PEDAL SLIDER LOCK – **LEGACY <2025** 41
BLOCCO CARRELLO PEDALE - PEDAL SLIDER LOCK 43
MOLLA RITORNO PEDALE – PEDAL RETURN SPRING 45
TANICA SERBATOIO 8.5 LT – FUEL TANK 8.5 LT 47
TANICA SERBATOIO 8.5 LT – FUEL TANK 8.5 LT 48
TANICA SERBATOIO 12.0 LT – FUEL TANK 12.0 LT 49
BATTERIA – BATTERY 51
PINZA FRENO Ø30 – BRAKE CALIPER Ø30 - **LEGACY** 53
PINZA FRENO Ø32 – BRAKE CALIPER Ø32 55
ASSALE – REAR AXLE 57
CARENA POSTERIORE – REAR FAIRING 59
LUCI STOP – REAR STOP LIGHT 61
DISCO FRENO E MOZZO – BRAKE DISC AND HUB 63
SALVA DISCO – DISC PROTECTOR 65
PIANALE – FLOOR TRAY 67
INTERNO PIANALE – INTERNAL FLOOR TRAY 69
SERBATOIO OLIO FRENI – BRAKE OIL RECOVERY TANK 71
SEDILE – SEAT 73
PIOMBO – LEAD BALLAST **LEGACY** 75
SUPPORTO PIOMBO 2.0 – LEAD BALLAST HOUSING 2.0 77
PARAURTI – BUMPER – **LEGACY** 79
PARAURTI – BUMPER 81
PROTEZIONE ANTERIORE – FRONT BUFFER 83
PROTEZIONE POSTERIORE – REAR BUFFER 85
PROTEZIONE LATERALE DESTRA – SIDE BUFFER R.H. 87
PROTEZIONE LATERALE SINISTRA – SIDE BUFFER L.H. 89
PLACCHE PARACOLPI – PLASTIC PLATE 91
SPOILER ANTERIORE – FRONT SPOILER 93
CARENA DESTRA – SIDE FAIRING R.H. 95
CARENA SINISTRA - SIDE FAIRING L.H. 97
FRONTALINO – FRONT FAIRING 99
FRONTALINO 507 – FRONT FAIRING 507 101
RUOTA ANTERIORE – FRONT WHEEL 103
RUOTA POSTERIORE – REAR WHEEL 105
MONTAGGIO MOTORE – ENGINE FITTING 107
SUPP. CARENA MOTORE E POMPA BENZINA – ENGINE FAIRING AND FUEL PUMP SUPP 109
SUPP. CARENA MOTORE E POMPA BENZINA V1.4 – ENGINE FAIRING SUPP. AND FUEL PUMP V1.4 111
CATENA - CHAIN 113
CINGHIA – BELT 115
TENDICATENA E TENDICINGHIA – CHAIN AND BELT TIGHTENER 117
SILENZIATORE – SILENCER 119
CARENA MOTORE – ENGINE FAIRING 121
KIT ADESIVI – STICKERS KIT 123
TUTA KART E CASCO – RACING SUIT AND HELMET 125
OPTIONAL PINZA FRENO ANTERIORE – OPTIONAL FRONT BRAKE CALIPER 127
PINZA FRENO ANTERIORE – FRONT BRAKE CALIPER 129
OPTIONAL REGOLAZIONE VOLANTE – OPTIONAL ADJUSTMENT STEERING WHEEL 131
OPTIONAL TRANSPONDER 133
OPTIONAL AVVIAMENTO ELETTRICO PER GX270 – OPTIONAL GX270 ELECTRIC STARTER 135
OPTIONAL MOTORE HONDA GX390 – OPTIONAL HONDA ENGINE GX390 137
OPTIONAL PROTEZIONE MOTORE – OPTIONAL ENGINE PROTECTION BAR 139
OPTIONAL RIDUZIONE SEDILE IN GOMMA – OPTIONAL RUBBER SEAT REDUCTION 141
OPTIONAL SEDILE REGOLABILE – OPTIONAL ADJUSTABLE SEAT 143
OPTIONAL ROLLBAR 145

SCOCCA – FRAME

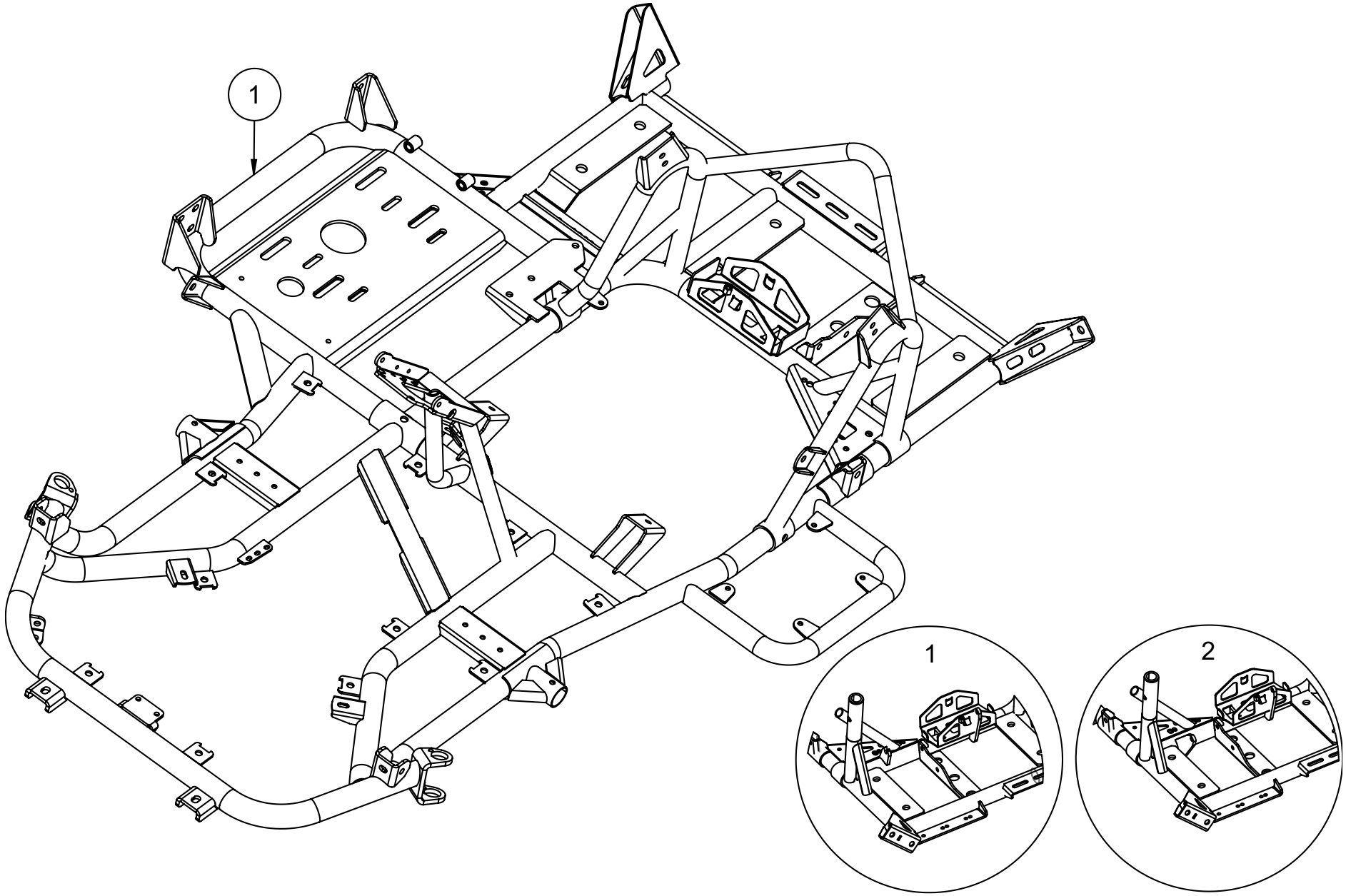

POS.	COD.	DESCRIZIONE	*DESCRIPTION*
1	FVO.04122	SCOCCA CENTURION SED.REG.+RB NERO PINZ.GRAND.	*CENTURION FRAME ADJUSTABLE SEAT + ROLL BAR BIG CALIPER*
2	FVN.03664	SCOCCA CENTURION 2014 SED.REG. NERA (PINZA VECCH.)	*BLACK FRAME CENTURION ADJUSTABLE SEAT SMALL CALIPER*

Previous model

New model

BARRETTA E FUSELLO – TRACK ROD AND STUBBLE - **LEGACY**

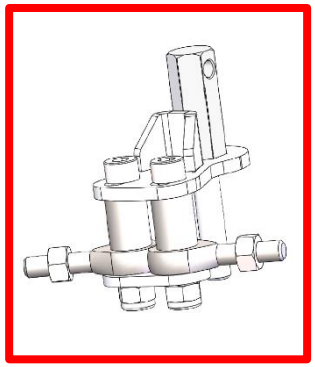

ATTENZIONE! ATTENTION!	
NEW MODEL	**OLD MODEL**
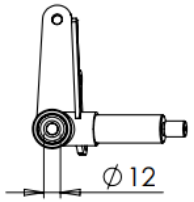	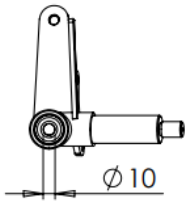

BARRETTA E FUSELLO – TRACK ROD AND STUBBLE - LEGACY

POS.	COD.	DESCRIZIONE	*DESCRIPTION*
1	AFN.00058	DADO M14X1,5 AUTOBLOCK BASSO	*NUT M14X1,5 SELF-LOCKING*
2	AFN.01564	RONDELLA 15X30X2,5	*WASHER 15-30X2,5*
3	FM0.0424D	FUSELLO NOL CE Ø12 DX COMPLETO	*STUB AXLE Ø12 RH COMPLETE CE*
4	FM0.0424S	FUSELLO NOL CE Ø12 SX COMPLETO	*STUB AXLE Ø12 LF COMPLETO CE*
5	AFN.05487	VITE M12X100 CILIN. 12.9 FILETTO 30MM ZINCATA	*M12X 95 SOCKET HEAD SCREW 30MM*
6	SZ0.05365	RONDELLA 12-20X2,5 (FUSELLO CENT)	*WASHER 12 - 20X2,5*
7	SZ0.03537	BOCCOLA MEZZA SFERA CASTER FORO Ø12 CENT	*BUSHING HALF SPHERICAL Ø12 CENTURION*
8	SZ0.03558	CASTER ECCENTRICO SFERICO D12 CENT	*D12 SPHERICAL CAM CENT*
9	FZ0.01602	CASTER FISSO STD	*FIXED CASTER STD*
10	AFN.02364	DADO M12 AUTOBLOCK ALTO	*M12 HIGH SELF-LOCKING NUT*
11	AFN.00483	VITE M 8X 40 SVASATA 5933	*M 8X 40 COUNTERSUNK HEAD SCREW*
12	SAN.00146	RONDELLA 8 SVASATA NERA	*WASHER 8 COUNTERSUNK BLACK*
13	AFN.00287	RONDELLA 8,5-14X1,5	*WASHER 8,5-14X1,5*
14	AFN.00128	DADO M 8 AUTOBLOCK ALTO	*NUT M8 HIGH SELF-LOCKING*
15	AFN.00681	VITE M 8X 50 CILINDRICA 5931	*M8X50 HEX SOCKET SCREW*
16	SZ0.03236	PERNO PIASTRINA BARRETTA STERZO CENT +5	*TRACK ROD PLATE PIVOT CENTURION*
17	SZ0.05179	RONDELLA PERNO PIASTRINA BARRETTA STERZO CENT	*STEERING ROD PLATE PIN WASHER*
18	AFN.01637	RONDELLA 10,5-20X2	*WASHER 10,5-20X2*
19	AFN.02393	DADO M10 AUTOBLOCK ALTO	*NUT M10 HIGH SELF-LOCKING*
20	SZ0.02307	DISTANZIALE FISSAGGIO BARRETTE CENT Ø8,5X16-20	*TRACK ROD CLAMP SPACER CENT*
21	SZ0.03242	PIASTRINA RINFORZO UNIBALL CENT +5	*STIFFNER PLATE STEERING BALL JOINT CENTURION*
22	AFS.0047S	UNIBALL STERZO SX C/DADO	*BALL JOINT LEFT WITH NUT*
23	AFS.0047D	UNIBALL STERZO DX C/DADO	*BALL JOINT RH WITH NUT*
24	SL1.06471	BARRETTA STERZO NYLON RINFORZATA MM.255 CENT	*TRACK ROD NYLON MM.255 CENTURION*
25	AFS.03338.2RS	CUSCINETTO 6001 Ø12 2RS	*BEARING 6001 STUB AXLE BOLT 2RS*
26	SZ0.E0064	SPESSORE 12X13 INTERNO FUSELLO CE	*STUB AXLE INTERNAL SPACER 12X13 CENT*
27	SZ0.03597	CHIAVE ECCENTRICO NOLEGGIO	*CASTER REGULATION KEY*
28	SL1.06471	BARRETTA STERZO NYLON RINFORZATA MM.255 CENT	*TRACK ROD NYLON MM.255 CENTURION*
29	SZ0.05520	SPESSORE 12-30X5 H3 FUSELLO RENTAL	*SPACER 12-30X5 H3 RENTAL*
30	AFN.03734	RONDELLA ELASTICA SPACCATA GROWER M12	*M12 GROWER WASHER*
31	CE00108	RONDELLA ELASTICA SPACCATA GROWER M 8	*M8 GROWER WASHER*
32	FBN.00252	SPESSORE 8,5-14X 5 BARRETTA	*ROD SPACER 8,5-14X5 TRACK ROD*
3	FM0.0424D	FUSELLO NOL CE Ø12 DX COMPLETO	*STUB AXLE Ø12 RH COMPLETE CE*
4	FM0.0424S	FUSELLO NOL CE Ø12 SX COMPLETO	*STUB AXLE Ø12 LF COMPLETO CE*
5	AFN.02328	VITE M10X 80 CILINDRICA 12.9 5931	*M10X 80 SOCKET HEAD SCREW 12,9*
6	AFN.01637	RONDELLA 10,5-20X2	*WASHER 10,5-20X2*
10	AFN.02393	DADO M10 AUTOBLOCK ALTO	*NUT M10 HIGH SELF-LOCKING*
25	AFN.00959	CUSCINETTO 6000 ZZ FUSELLO D10	*BEARING STUB AXLE BOLT Ø10*
26	SBN.00615	SPESSORE 10X14 INTERNO FUSELLO CENTURION	*STUB AXLE INTERNAL SPACER 10-14 CENT*
29-30	AFN.01637	RONDELLA 10,5-20X2	*WASHER 10,5-20X2*

BARRETTA E FUSELLO – TRACK ROD AND STUBBLE

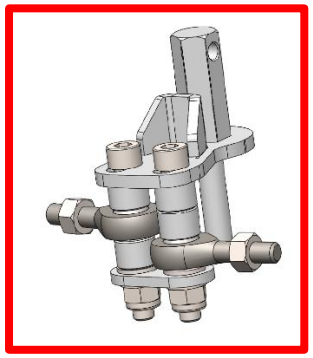

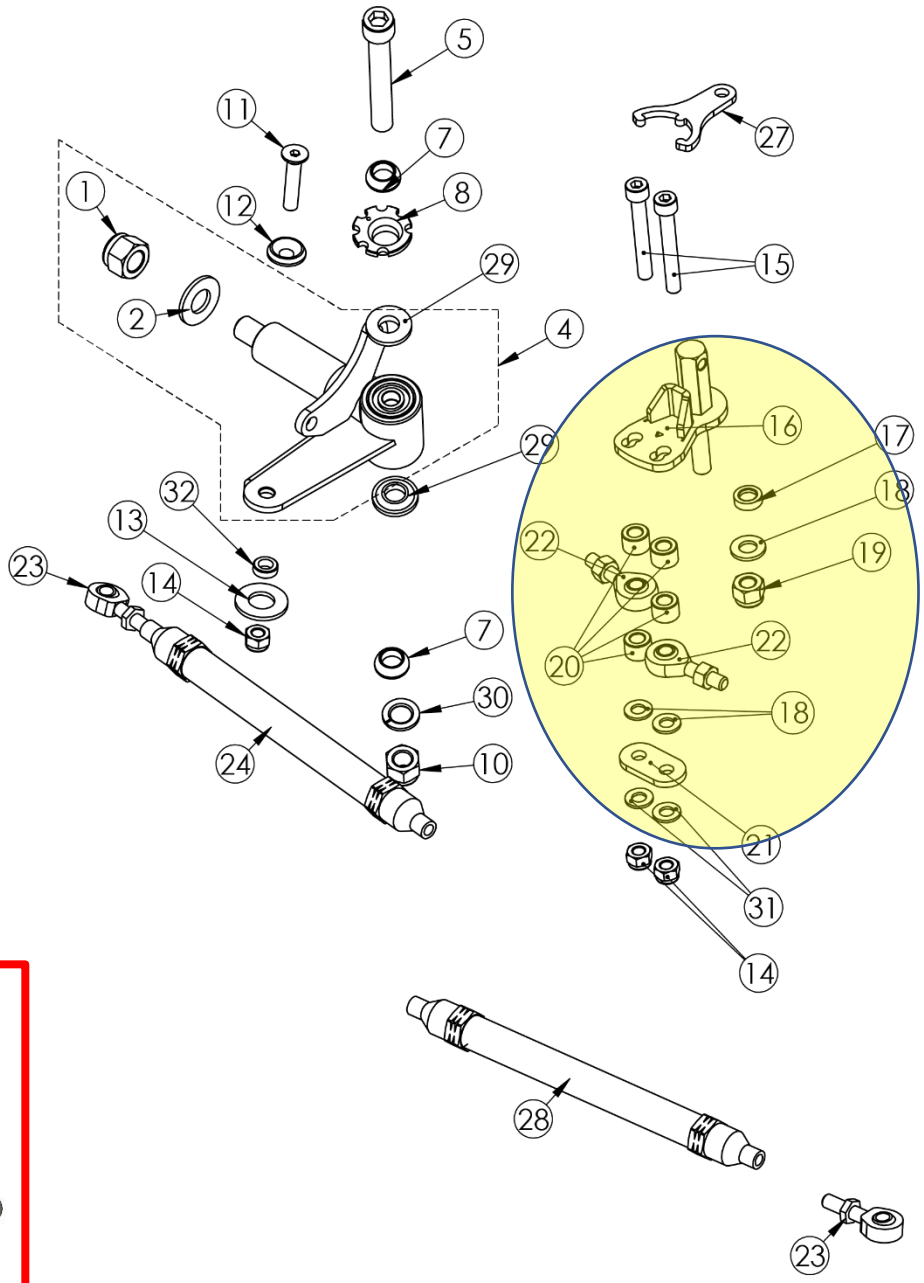

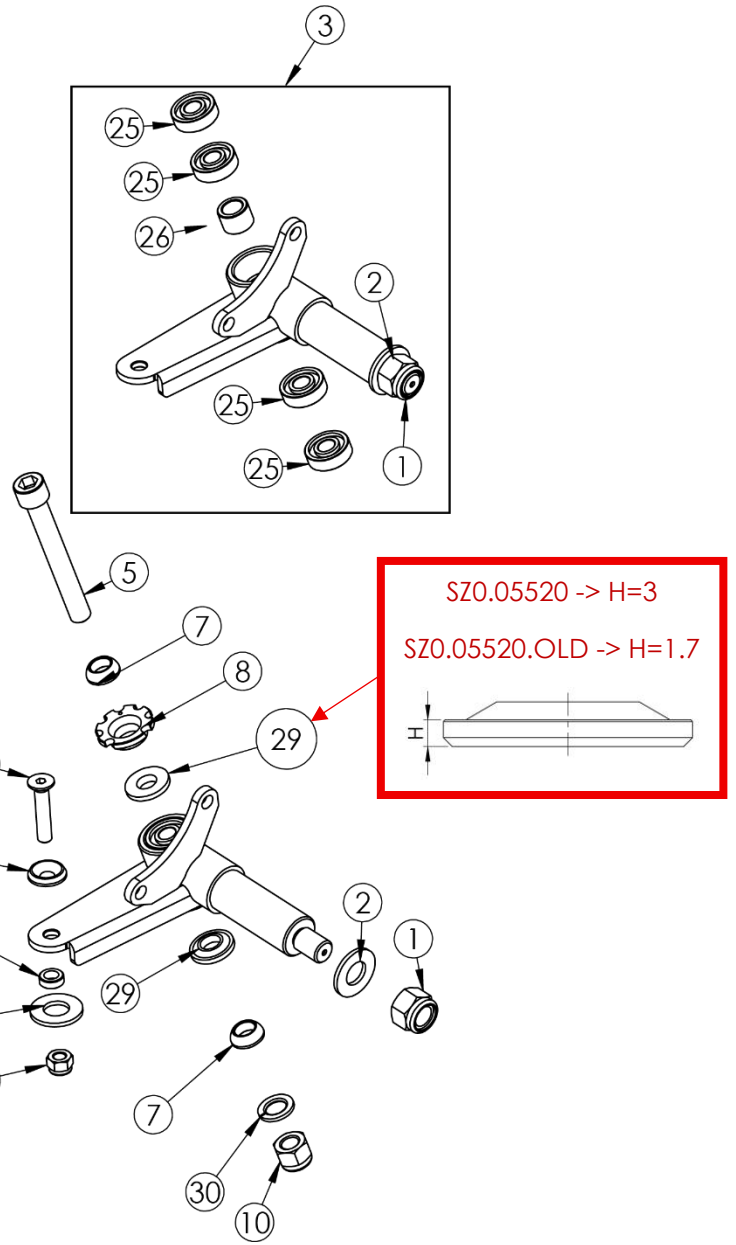

POS.	COD.	DESCRIZIONE	*DESCRIPTION*
1	AFN.00058	DADO M14X1,5 AUTOBLOCK BASSO	*NUT M14X1,5 SELF-LOCKING*
2	AFN.01564	RONDELLA 15X30X2,5	*WASHER 15-30X2,5*
3	FM0.0424D	FUSELLO NOL CE Ø12 DX COMPLETO	*STUB AXLE Ø12 RH COMPLETE CE*
4	FM0.0424S	FUSELLO NOL CE Ø12 SX COMPLETO	*STUB AXLE Ø12 LF COMPLETO CE*
5	AFN.05487	VITE M12X100 CILIN. 12.9 FILETTO 30MM ZINCATA	*M12X 95 SOCKET HEAD SCREW 30MM*
6	SZ0.05365	RONDELLA 12-20X2,5 (FUSELLO CENT)	*WASHER 12 - 20X2,5*
7	SZ0.03537	BOCCOLA MEZZA SFERA CASTER FORO Ø12 CENT	*BUSHING HALF SPHERICAL Ø12 CENTURION*
8	SZ0.03558	CASTER ECCENTRICO SFERICO D12 CENT	*D12 SPHERICAL CAM CENT*
9	FZ0.01602	CASTER FISSO STD	*FIXED CASTER STD*
10	AFN.02364	DADO M12 AUTOBLOCK ALTO	*M12 HIGH SELF-LOCKING NUT*
11	AFN.00483	VITE M 8X 40 SVASATA 5933	*M 8X 40 COUNTERSUNK HEAD SCREW*
12	SAN.00146	RONDELLA 8 SVASATA NERA	*WASHER 8 COUNTERSUNK BLACK*
13	AFN.00287	RONDELLA 8,5-14X1,5	*WASHER 8,5-14X1,5*
14	AFN.00128	DADO M 8 AUTOBLOCK ALTO	*NUT M8 HIGH SELF-LOCKING*
15	AFN.00681	VITE M 8X 50 CILINDRICA 5931	*M8X50 HEX SOCKET SCREW*
16	SZ0.03236	PERNO PIASTRINA BARRETTA STERZO CENT +5	*TRACK ROD PLATE PIVOT CENTURION*
17	SZ0.05179	RONDELLA PERNO PIASTRINA BARRETTA STERZO CENT	*STEERING ROD PLATE PIN WASHER*
18	AFN.01637	RONDELLA 10,5-20X2	*WASHER 10,5-20X2*
19	AFN.02393	DADO M10 AUTOBLOCK ALTO	*NUT M10 HIGH SELF-LOCKING*
20	SZ0.02307	DISTANZIALE FISSAGGIO BARRETTE CENT Ø8,5X16-20	*TRACK ROD CLAMP SPACER CENT*
21	SZ0.03242	PIASTRINA RINFORZO UNIBALL CENT +5	*STIFFNER PLATE STEERING BALL JOINT CENTURION*
22	AFS.0047S	UNIBALL STERZO SX C/DADO	*BALL JOINT LEFT WITH NUT*
23	AFS.0047D	UNIBALL STERZO DX C/DADO	*BALL JOINT RH WITH NUT*
24	SL1.06471	BARRETTA STERZO NYLON RINFORZATA MM.255 CENT	*TRACK ROD NYLON MM.255 CENTURION*
25	AFS.03338.2RS	CUSCINETTO 6001 Ø12 2RS	*BEARING 6001 STUB AXLE BOLT 2RS*
26	SZ0.E0064	SPESSORE 12X13 INTERNO FUSELLO CE	*STUB AXLE INTERNAL SPACER 12X13 CENT*
27	SZ0.03597	CHIAVE ECCENTRICO NOLEGGIO	*CASTER REGULATION KEY*
28	SL1.06472	BARRETTA STERZO RINFORZATA MM.270 CENT	*TRACK ROD NYLON MM.270 CENTURION*
29	SEE PICTURE	SPESSORE 12-30X5 H3 FUSELLO RENTAL	*SPACER 12-30X5 H3 RENTAL*
30	AFN.03734	RONDELLA ELASTICA SPACCATA GROWER M12	*M12 GROWER WASHER*
31	CE00108	RONDELLA ELASTICA SPACCATA GROWER M 8	*M8 GROWER WASHER*
32	FBN.00252	SPESSORE 8,5-14X 5 BARRETTA	*ROD SPACER 8,5-14X5 TRACK ROD*

PARAFANGO – FENDER

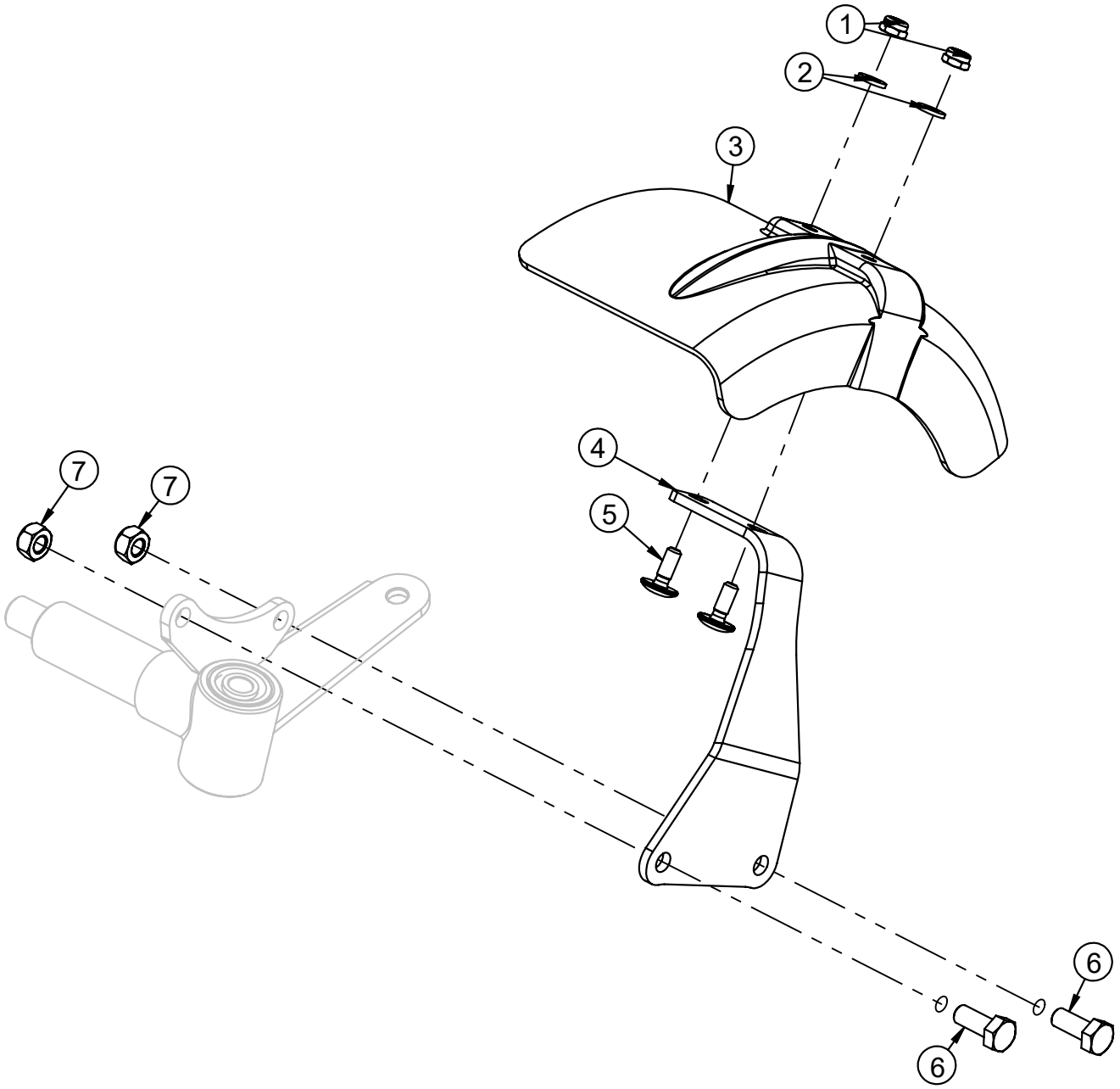

POS.	COD.	DESCRIZIONE	*DESCRIPTION*
1	AFN.00106	DADO M 6 AUTOBLOCK BASSO	*NUT M 6 LOW SELF-LOCKING*
2	AFN.00263	RONDELLA 6,5-18X1,6	*WASHER 6,5-18X1,6*
3	AFS.02938	PARAFANGO DX/SX ANT.ESTERNO CENTURION	*FRONT/EXTERNAL FENDER RH/LF CENT*
4	SC0.3196D	SUPPORTO PARAFANGO MOZZO CORTO CENT CROM DX	*FENDER SUPPORT RH SHORT HUB CENT*
	SC0.3196S	SUPPORTO PARAFANGO MOZZO CORTO CENT CROM SX	*FENDER SUPPORT LF SHORT HUB CENT*
5	AFS.00261	VITE TESTA TONDA LARGA M 6X 16 PIANALE	*FLOOR TRAY SCREW LARGE ROUND HEAD M6X16*
6	AFN.00909	VITE M 8X 20 ESAGONALE	*M8X20 HEXAGONAL HEAD SCREW*
7	AFN.00286	DADO M 8 METALBLOCK	*NUT M 8 METALBLOCK*

PIANTONE STERZO – STEERING COLUMN

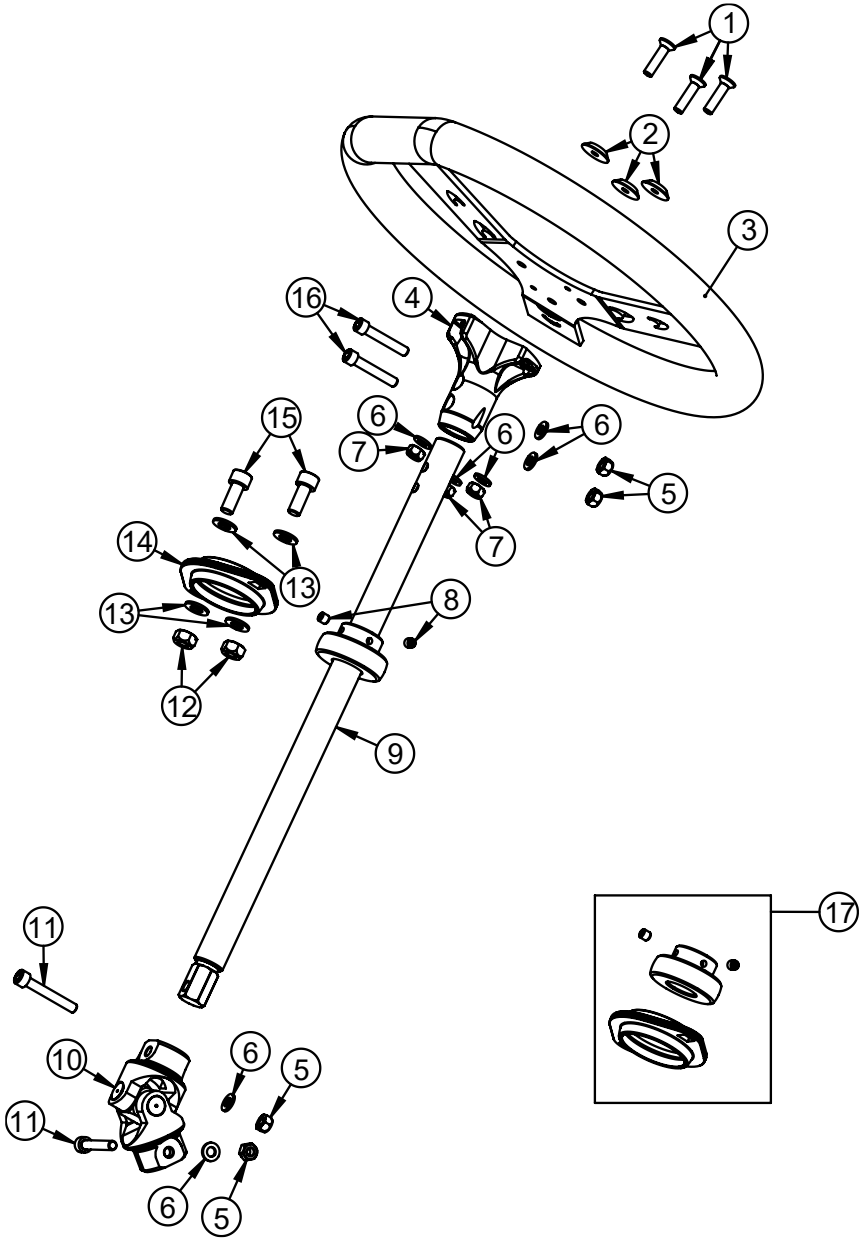

POS.	COD.	DESCRIZIONE	*DESCRIPTION*
1	AFN.00499	VITE M 6X 30 SVASATA 5933	*M 6X30 CONTERSUNK HEAD SCREW*
2	SAN.00249	RONDELLA 6 SVASATA NERA	*WASHER 6 COUNTERSUNK BLACK*
3	AFS.04221	VOLANTE NOLEGGIO CENTURION 360 2018	*STEERING WHEEL CENT Ø360*
4	FAN.01626	MOZZO VOLANTE INCLINATO NERO	*STEERING WHEEL HUB INCLINED BLACK*
5	AFN.00264	DADO M 6 AUTOBLOCK ALTO	*NUT M6 HIGH SELF-LOCKING*
6	AFN.00105	RONDELLA 6,5-12X1,5	*WASHER 6,5-12X1,5*
7	AFN.00106	DADO M 6 AUTOBLOCK BASSO	*NUT M6 LOW SELF-LOCKING*
8	AFN.00289	GRANO M 6X 6 CUSCINETTO 30/PULEGGIA	*GRUB SCREW M6X6 AXLE BEARING 30/PULLEY*
9	FC0.02186	PIANTONE STERZO CENTURION	*STEERING WHEEL COLUMN CENT*
10	AFS.02124	GIUNTO CARDANICO D.42 PIANTONE CENT	*STEERING COLUMN JUNKTION D.42 CENT*
11	AFN.00137	VITE M 6X 35 CILINDRICA 5931	*M 6X35 SOCKET HEAD SCREW*
12	AFN.00128	DADO M 8 AUTOBLOCK ALTO	*NUT M8 HIGH SELF-LOCKING*
13	AFN.00129	RONDELLA 8,5-17X1,5	*WASHER 8,5-17X1,5*
~~14~~	~~AFS.02527~~	~~FLANGIA CUSCINETTO PIANTONE CENTURION~~	~~*STEERING COLUMN BEARING FLANGE CENT*~~
15	AFN.00107	VITE M 8X 25 ESAGONALE 5739	*M 8X25 HEXAGONAL HEAD SCREW*
16	AFN.02154	VITE M 6X 35 CILINDRICA 12.9 5931	*M 6X35 SOCKET HEAD SCREW 12.9*
17	FK0.02121	CUSCINETTO PIANTONE COMPLETO CENTURION	*STEERING COLUMN BEARING COMPLETE CENT*

TUBOLARE PEDALE – PEDAL TUBE

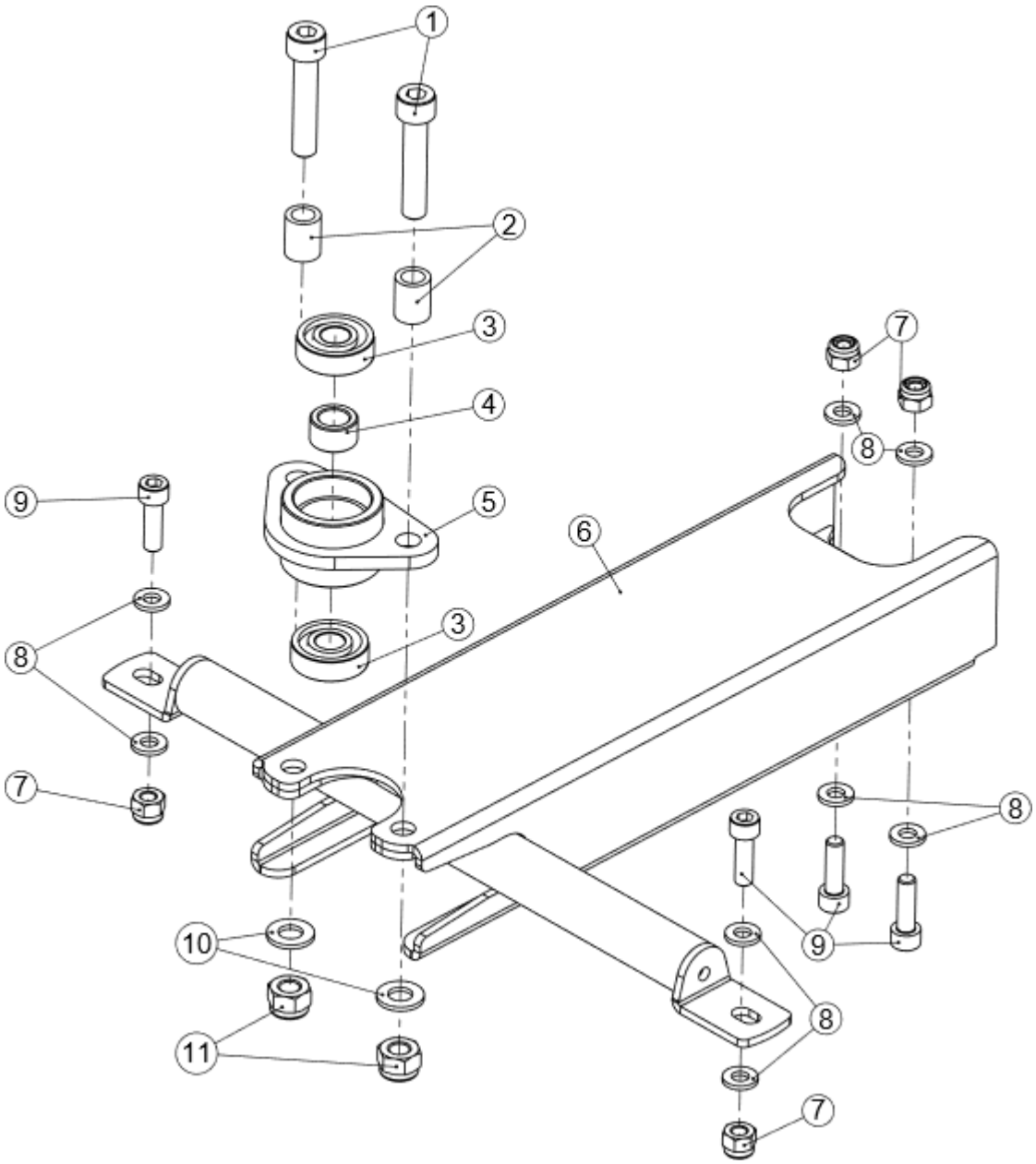

POS.	COD.	DESCRIZIONE	*DESCRIPTION*
1	AFN.02153	VITE M 8X 35 CILINDRICA 5931	*M 8X35 SOCKET HEAD SCREW*
2	SZ0.02307	DISTANZIALE FERMO PIANTONE CENTURION	*STEERING COLUMN BLOCK SPACER CENT*
3	AFN.00959	CUSCINETTO 6000 ZZ FUSELLO D10	*BEARING STUB AXLE BOLT Ø10*
4	SZ0.02306	DISTANZIALE BUSSOLA PIANTONE CENT	*STEERING COLUMN SLEEVE SPACER CENT*
5	SC0.02074	BLOCCO CUSCINETTO STERZO CENTURION	*STEERING BEARING BLOCK CENT*
6	SC0.02066	TUBOLARE PEDALE CENTURION	*PEDAL TUBE CENT*
7	AFN.00264	DADO M 6 AUTOBLOCK ALTO	*NUT M6 HIGH SELF-LOCKING*
8	AFN.00105	RONDELLA 6,5-12X1,5	*WASHER 6,5-12X1,5*
9	AFN.00183	VITE M 6X 20 CILINDRICA 5931	*M6X20 SOCKET HEAD SCREW*
10	AFN.00350	RONDELLA 8,5-16X1,5	*WASHER 8,5-16X1,5*
11	AFN.00160	DADO M 8 AUTOBLOCK BASSO	*NUT M8 LOW SELF-LOCKING*

KIT STERZO DIRETTO COMPLETO – COMPLETE STEERING KIT – **LEGACY<2025**

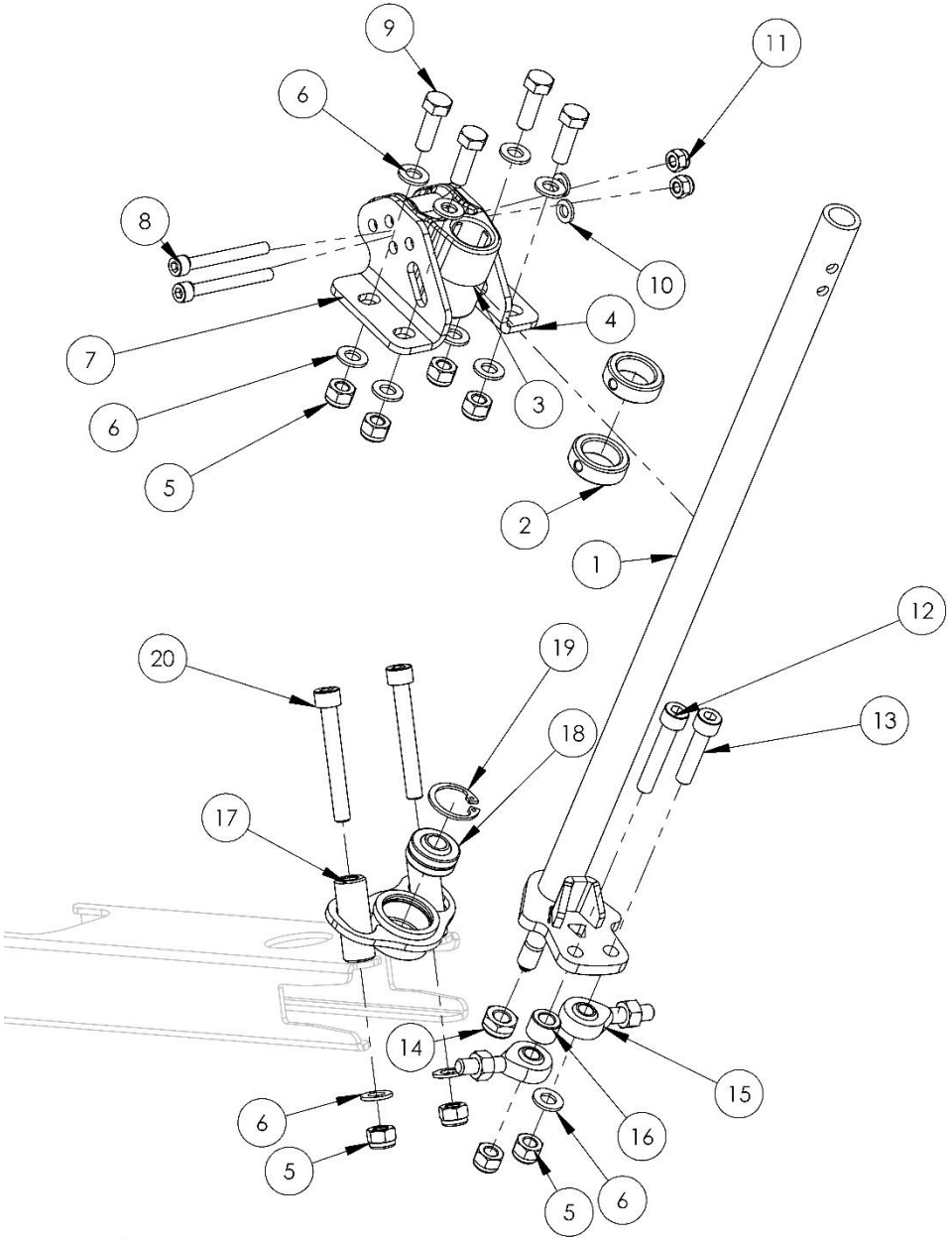

KIT STERZO DIRETTO COMPLETO – COMPLETE STEERING KIT – **LEGACY<2025**

POS.	COD.	DESCRIZIONE	*DESCRIPTION*
1	FC0.05231	PIANTONE STERZO DIRETTO CENTURION	*CENTURION DIRECT STEERING*
2	FAN.00356	BOCCOLA PIANTONE NERA	*BLACK STEERING SHAFT BUSHING*
3	AFS.04812	SUPPORTO PIANTONE 4 FORI PLASTICA	*STEERING COLUMN PLASTIC BUSHING – 4 HOLES*
4	SC0.6406D	PIASTRA BOCCOLA PLASTICA PIANTONE CENTURION DESTRO	*CENTURION STEERING COLUMN BUSHING MOUNTING RIGHT*
5	AFN.00128	DADO M8 AUTOBLOCCANTE ALTO	*M8 TALL SELF LOCKING NUT*
6	AFN.00350	RONDELLA 8.5X26X1.5	*WASHER 8.5X16X1.5*
7	SC0.6406S	PIASTRA BOCCOLA PLATICA PIANTONE CENTURION LEFT	*CENTURION STEERING COLUMN BUSHING MOUNTING LEFT*
8	AFN.02418	VITE M6X55 CILINDRICA	*M6X55 CYLINDRICAL SCREW*
9	AFN.03516	VITE ESAGONALE M8X25	*M8X25 HEX SCREW*
10	AFN.00105	RONDELLA 6.4-12X1.6	*6.4-12X1.6 PLAIN WASHER*
11	AFN.00264	DADO AUTOBLOCK ALTO M6	*M6 TALL SELF LOCKING NUT*
12	AFN.00159	VITE CILINDRICA ESAGONO INCASSATO M8X45	*SOCKET HEAD CAP SCREW M8X45*
13	AFN.02153	VITE M8X35 CILINDRICA	*M8X40 SOCKET HEAD CAP SCREW*
14	AFN.00657	DADO AUTOBLOCK BASSO M10	*M10 LOW SELF LOCKING NUT*
15	AFS.0047D	UNIBALL STERZO CON DADO DX	*UNIBALL M8 RIGHT WITH NUT*
16	SZ0.06221	DISTANZIALE Ø8.5X16X11 BARRETTE CENT	*SPACER Ø8.5X16X11 CENTURION STEERING*
17	SZ0.05140	SUPPORTO STERZO DIRETTO CENTURION	*CENTURION DIRECT STEERING MOUNTING*
18	AFN.02198	UNIBALL PIANTONE Ø10 CENT	*STEERING COLUMN UNIBALL Ø10 CENTURION*
19	AFN.06482	SEEGER Ø26X1.5 UTILIZZI PESANTI	*CIRCLIP Ø26X1.5 HEAVY DUTY*
20	AFN.02311	VITE M8X60 TESTA CILINDRICA ESAGONO INCASSATO	*M8X60 SOCKET HEAD CAP SCREW*

KIT STERZO DIRETTO COMPLETO – COMPLETE STEERING KIT

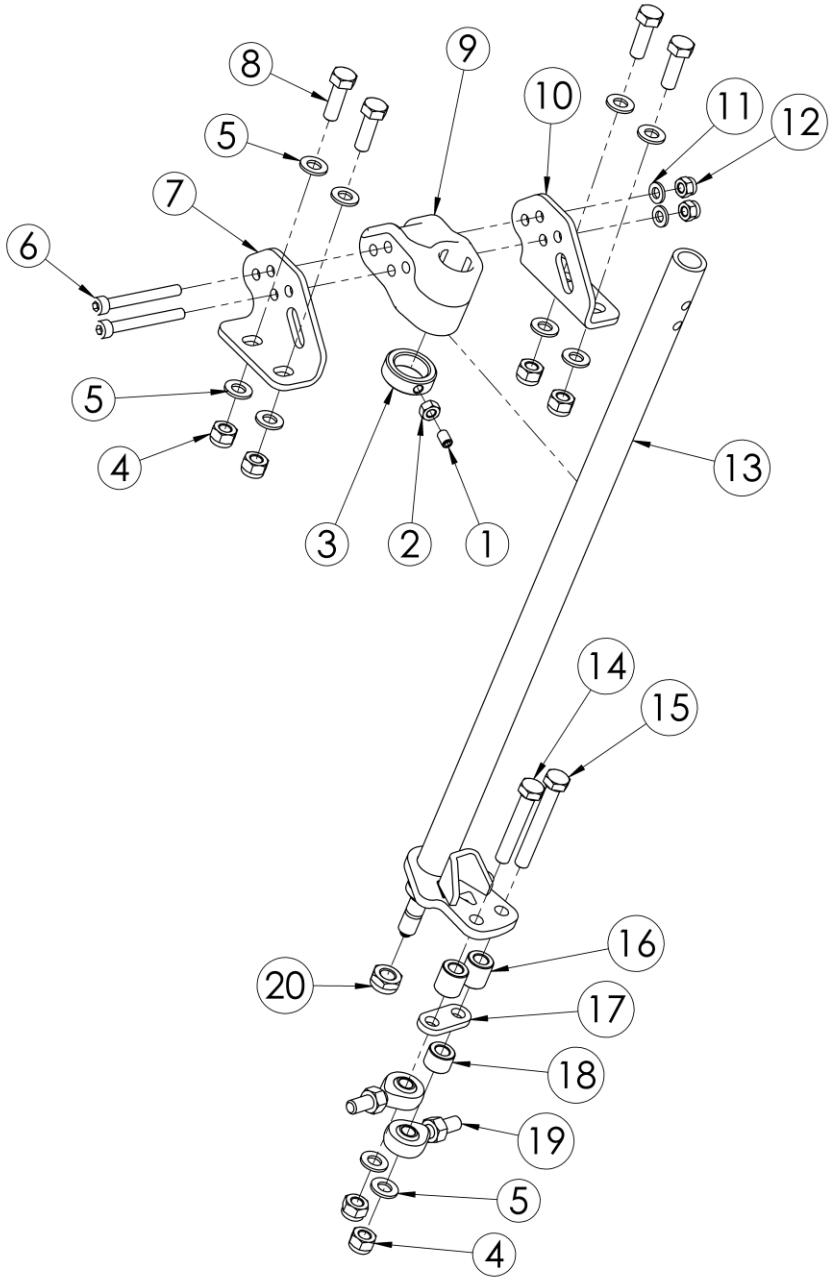

KIT STERZO DIRETTO COMPLETO – COMPLETE STEERING KIT

POS.	COD.	DESCRIZIONE	*DESCRIPTION*
1	AFN.00357	GRANO M 6X10 (PIANTONE-POMPA V06)	GRUB SCREW M6X10
2	AFN.00093	DADO M 6	*NUT M 6*
3	FAN.00356	BOCCOLA PIANTONE NERA	*STEERING COLUMN LOCK RING BLACK*
4	AFN.00128	DADO M 8 AUTOBLOCK ALTO	*NUT M8 HIGH SELF-LOCKING*
5	AFN.00350	RONDELLA 8,5-16X1,5	*WASHER 8,5-16X1,5*
6	AFN.02418	VITE M 6X 55 CILINDRICA 5931	*M 6X 55 SOCKET HEAD SCREW*
7	SC0.6406S	PIASTRA BOCCOLA PLASTICA PIANTONE CENT SX	*RH STEERING COLUMN PLASTIC BUSHING PLATE*
8	AFN.03516	VITE M 8X 25 ESAGONALE 10.9 5739	*M 8X25 HEX SCREW*
9	AFS.04812	SUPPORTO PIANTONE PLASTICA 4 FORI	*PLASTIC COLUMN SUPPORT 4 HOLES*
10	SC0.6406D	PIASTRA BOCCOLA PLASTICA PIANTONE CENT DX	*LH STEERING COLUMN PLASTIC BUSHING PLATE*
11	AFN.00105	RONDELLA 6,5-12X1,5	*WASHER 6,5-12X1,5*
12	AFN.00264	DADO M 6 AUTOBLOCK ALTO	*NUT M6 HIGH SELF-LOCKING*
13	FC0.05231	PIANTONE STERZO DIRETTO CENT	*STRAIGHT STEERING COLUMN CENT*
14	AFN.00443	VITE M 8X 50 ESAGONALE 5739	*M 8X50 HEXAGONAL HEAD SCREW*
15	AFN.02291	VITE M 8X 60 ESAGONALE 5739	*M 8X 60 HEXAGONAL HEAD SCREW*
16	SZ0.07153	DISTANZIALE FISSAGGIO BARRETTE CENT Ø8,5X16-16	*TRACK ROD CLAMP SPACER CENT*
17	SZ0.03242	PIASTRINA RINFORZO UNIBALL CENT +5	*STIFFNER PLATE STEERING BALL JOINT CENTURION*
18	SZ0.06221	DISTANZIALE FISSAGGIO BARRETTE CENT Ø8,5X16-10	*TRACK ROD CLAMP SPACER CENT*
19	AFS.0047D	UNIBALL STERZO DX C/DADO	*BALL JOINT RH WITH NUT*
20	AFN.00657	DADO M10 AUTOBLOCK BASSO	*NUT M10 LOW SELF-LOCKING*

PEDALE ACCELERATORE – THROTTLE PEDAL – **LEGACY <2025**

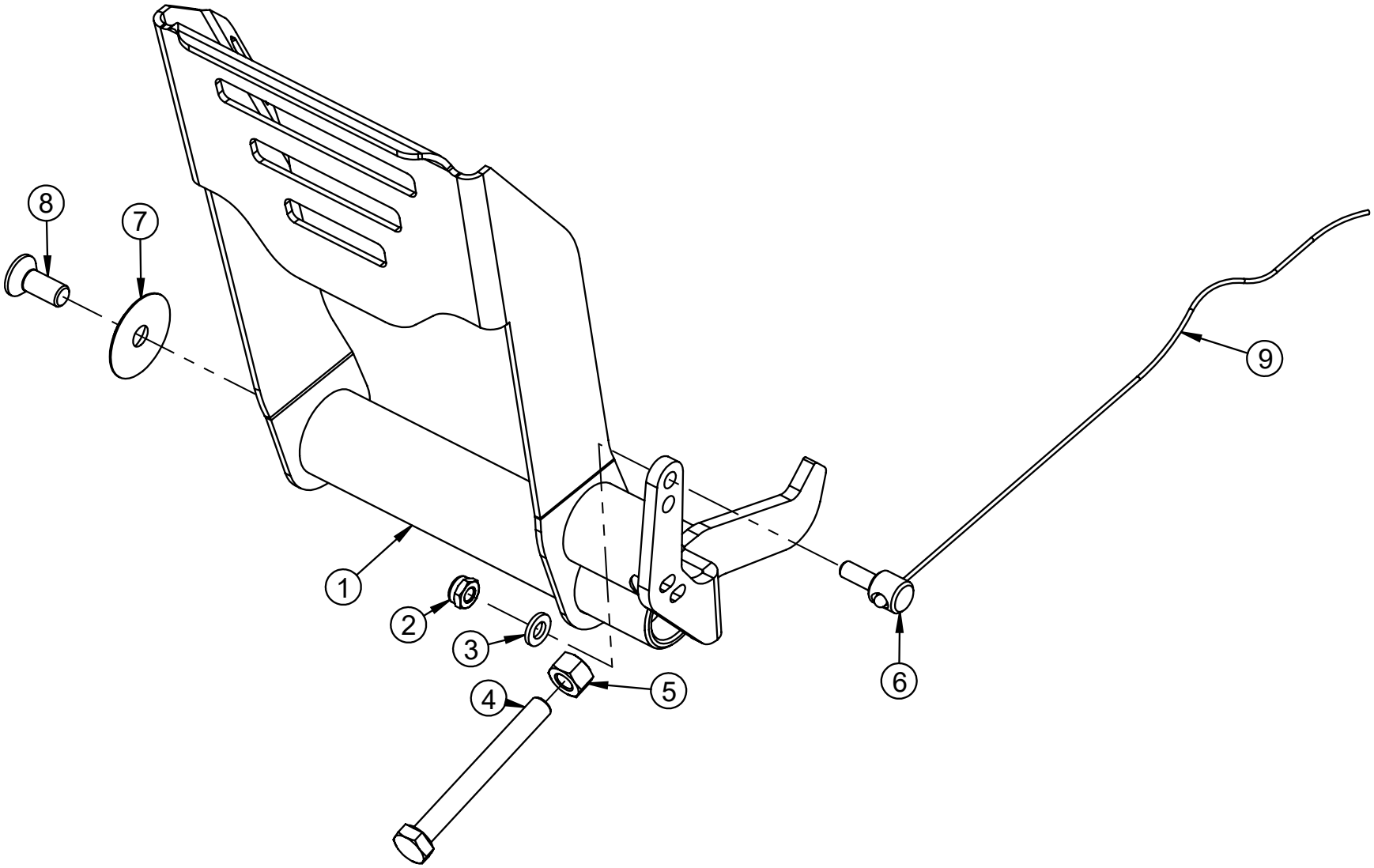

POS.	COD.	DESCRIZIONE	*DESCRIPTION*
1	SC0.4952D	PEDALE CENTURION 2019 GAS DX	*GAS PEDAL CENT*
2	AFN.00106	DADO M 6 AUTOBLOCK BASSO	*NUT M6 LOW SELF-LOCKING*
3	AFN.00105	RONDELLA 6,5-12X1,5	*WASHER 6,5-12X1,5*
4	TES.08X080	VITE M 8X 80 ESAGONALE 5739 TUTTO FILETTO	*M 8X 80 HEXAGONAL HEAD SCREW*
5	AFN.0049D	DADO M 8 DX	*NUT M8*
6	SBN.02396	PERNO FERMAFILO CENT	*CABLE ADJUSTER PIVOT BLACK*
7	FAN.00260	RONDELLA 8 SEDILE ALL.NERA	*ALUMINUM SEAT WASHER BLACK 8*
8	AFN.00290	VITE M 8X20 SVASATA 5933	*M8X20 COUNTERSUNK HEAD SCREW*
9	AFS.02130	FILO GAS MM2200 CENTURION SP.1,5	*GAS CABLE CENT SP.1,5*

PEDALE FRENO – BRAKE PEDAL – **LEGACY <2025**

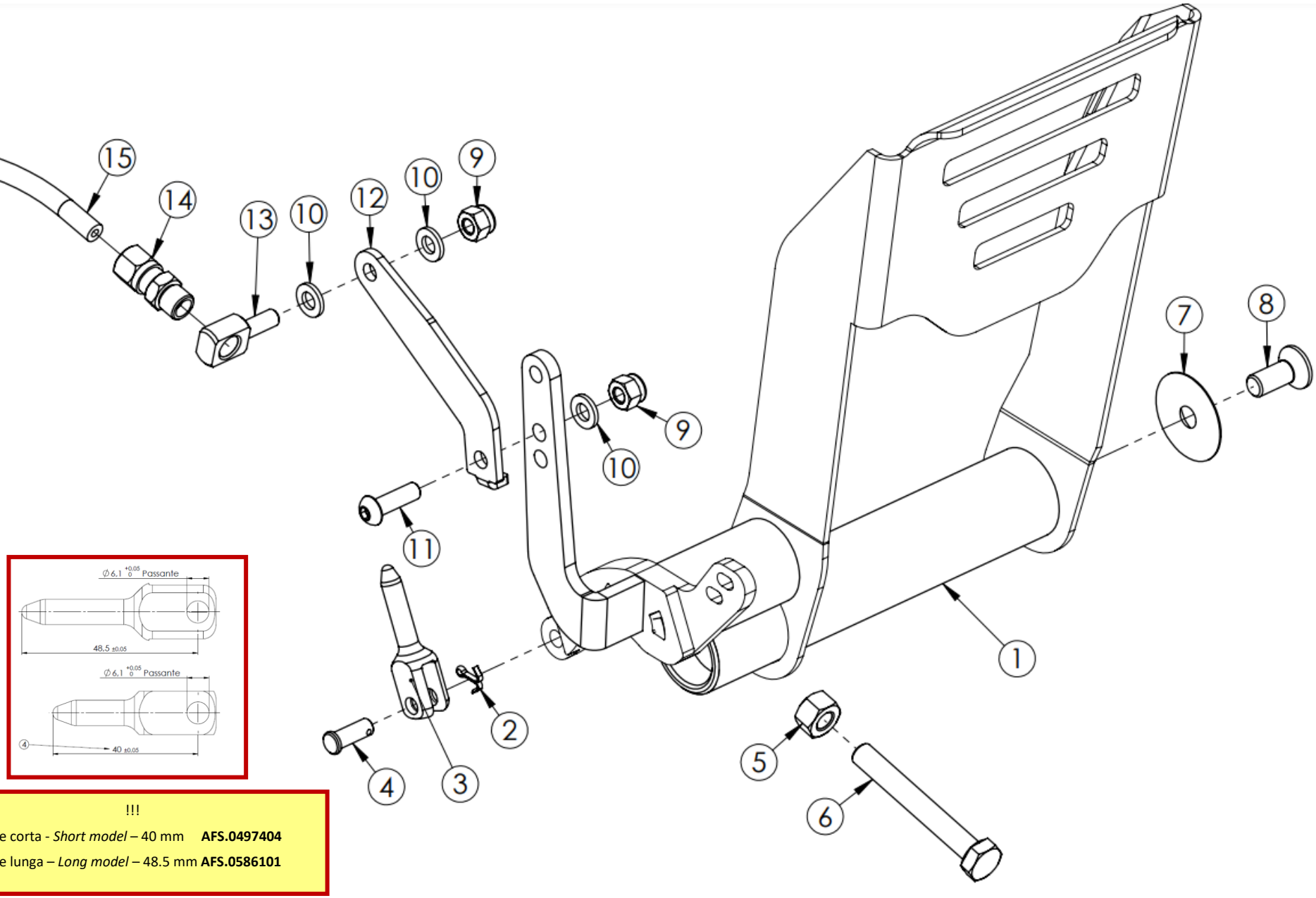

!!!

Versione corta - *Short model* – 40 mm **AFS.0497404**

Versione lunga – *Long model* – 48.5 mm **AFS.0586101**

POS.	COD.	DESCRIZIONE	*DESCRIPTION*
1	SC0.4952S	PEDALE CENTURION 2019 FRENO SX	*BRAKE PEDAL CENT*
2	AFN.00201	COPIGLIA	*MASTER CYLINDER SPLIT PIN*
3	AFS.0586101	PUNTALE POMPA FRENI SP.6 CENT	*TOE MASTER CYLINDER SP.6 CENT*
4	SBN.00214	SPINA RIPARTITORE MM17,5	*DIVIDER PIN 17,5MM*
5	AFN.0049D	DADO M 8 DX	*NUT M8*
6	AFN.02291	VITE M 8X 60 ESAGONALE 5739	*M 8X 60 HEXAGONAL HEAD SCREW*
7	FAN.00260	RONDELLA 8 SEDILE ALL.NERA	*ALUMINUM SEAT WASHER BLACK 8*
8	AFN.00290	VITE M 8X20 SVASATA 5933	*M8X20 COUNTERSUNK HEAD SCREW*
9	AFN.00264	DADO M 6 AUTOBLOCK ALTO	*NUT M6 HIGH SELF-LOCKING*
10	AFN.00105	RONDELLA 6,5-12X1,5	*WASHER 6,5-12X1,5*
11	AFN.02144	VITE M 6X 20 BOMBATA 7380	*M6X20 BUTTON HEAD SCREW*
12	SZ0.04019	LEVA PEDALE FRENO CENT (PROLUG.LEVA GAS/FRENO)	*BRAKE PEDAL LEVER (EXTENSION BRAKE/GAS) CENT*
13	SZ0.04596	RACCORDO REGISTRO GUAINA GAS H18	*GAS CABLE FITTING H18*
14	AFN.00425	RACCORDO DIRITTO COMPLETO	*STRAIGHT PIPE FITTING COMPLETE*
15	AMS.00591	GUAINA FILO D7 GAS	*OUTER CABLE Ø7 FOR GAS*

CARRELLO PEDALE – PEDAL SLIDER – **LEGACY< 2025**

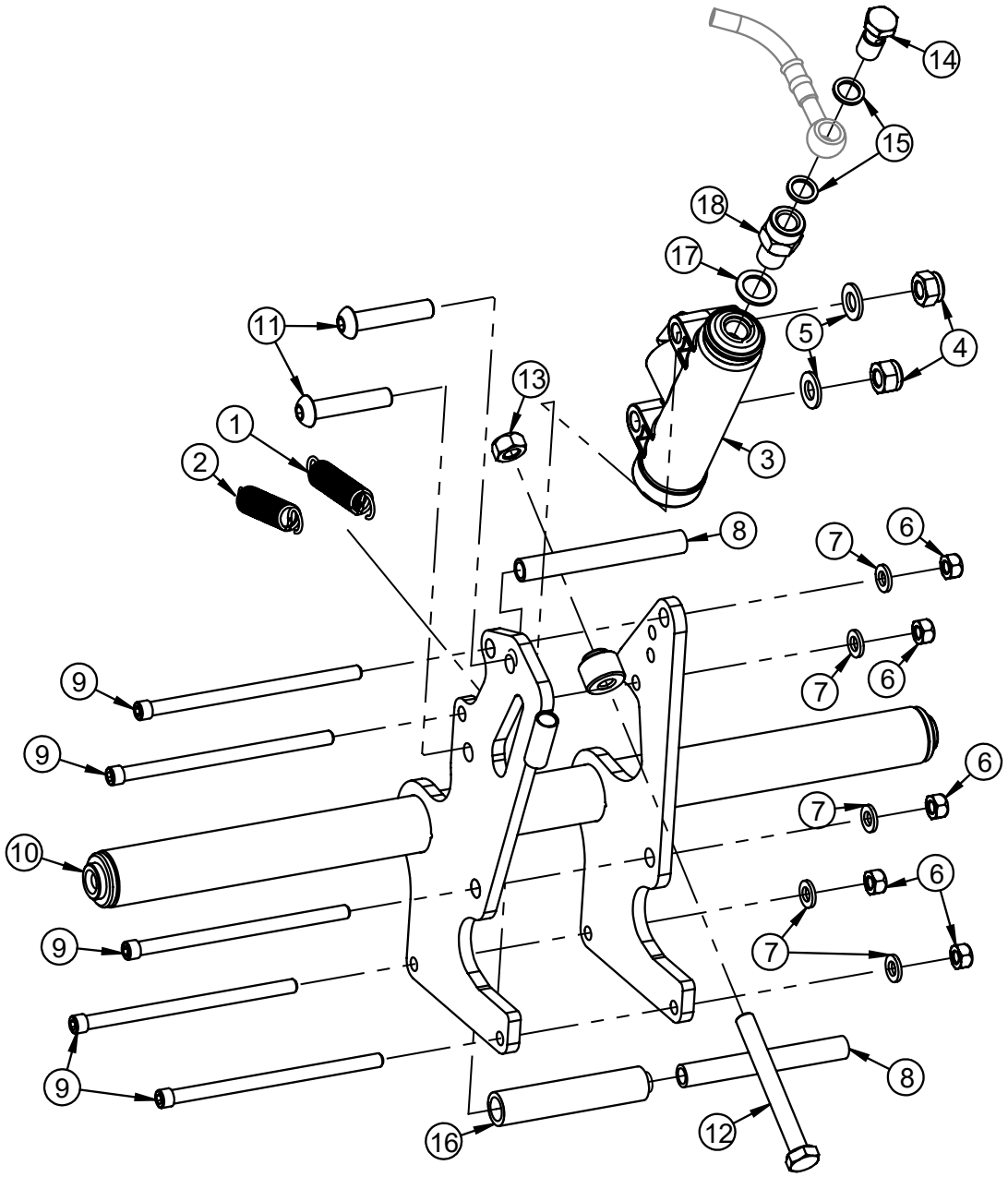

POS.	COD.	DESCRIZIONE	*DESCRIPTION*
1	SZ0.02203	MOLLA PEDALE CENT GAS	*PEDAL SPRING GAS/EXHAUST CENT*
2	SZ0.02204	MOLLA PEDALE CENT FRENO	*PEDAL SPRING BRAKE CENT*
3	FMN.02993	POMPA FRENO D19 CENTURION COMPLETA	*MASTER CYLINDER D19 COMPLETE CENT*
4	AFN.00160	DADO M 8 AUTOBLOCK BASSO	*NUT M8 LOW SELF-LOCKING*
5	AFN.00129	RONDELLA 8,5-17X1,5	*WASHER 8,5-17X1,5*
6	AFN.00106	DADO M 6 AUTOBLOCK BASSO	*NUT M6 LOW SELF-LOCKING*
7	AFN.00105	RONDELLA 6,5-12X1,5	*WASHER 6,5-12X1,5*
8	SZ0.02303	DISTANZIALE PEDALIERA CENT ZINC	*CENT FOOTREST SPACER*
9	AFN.02290	VITE M 6X100 CILINDRICA 5931	*M6X100 HEX SOCKET SCREW*
10	SC0.02069	CARRELLO PEDALE CENTURION	*PEDAL TROLLEY CENT*
11	AFN.00443	VITE M 8X 50 ESAGONALE 5739	*M 8X50 HEXAGONAL HEAD SCREW*
12	AFN.00914	VITE M 8X 70 ESAGONALE 5739 TUTTO FILETTO	*M 8X70 HEXAGONAL HEAD SCREW*
13	AFN.0049D	DADO M 8 DX	*NUT M8*
14	SZ0.00185	RACCORDO M10 V09/10	*FITTING M10*
15	AFN.00186	RONDELLA 10,5-14X2 RAME	*COPPER WASHER 10,5-14X2*
16	FL1.03591	RULLO NYLON CARRELLO PEDALE CENT	*PEDAL TROLLEY NYLON SPACER*
17	AFN.03545	RONDELLA 12 -18X1,5 RAME CENTURION	*MASTER CYLINDER WASHER 12X18X1.5*
18	SZ0.02356	RIDUZIONE POMPA FRENO CENT	*CENTURION MASTER CYLINDER REDUCTION*

POMPA FRENO COMPLETA CENTURION “SENZA LOGO CRG” NON DISPONIBILE PER LA VENDITA, ORDINARE FMN.02993

-

CENTURION MASTER CYLINDER “WITHOUT LOGO CRG” IT IS NOT AVAILABLE, PLEASE ORDER FMN.02993

PEDALIERA – FOOTREST

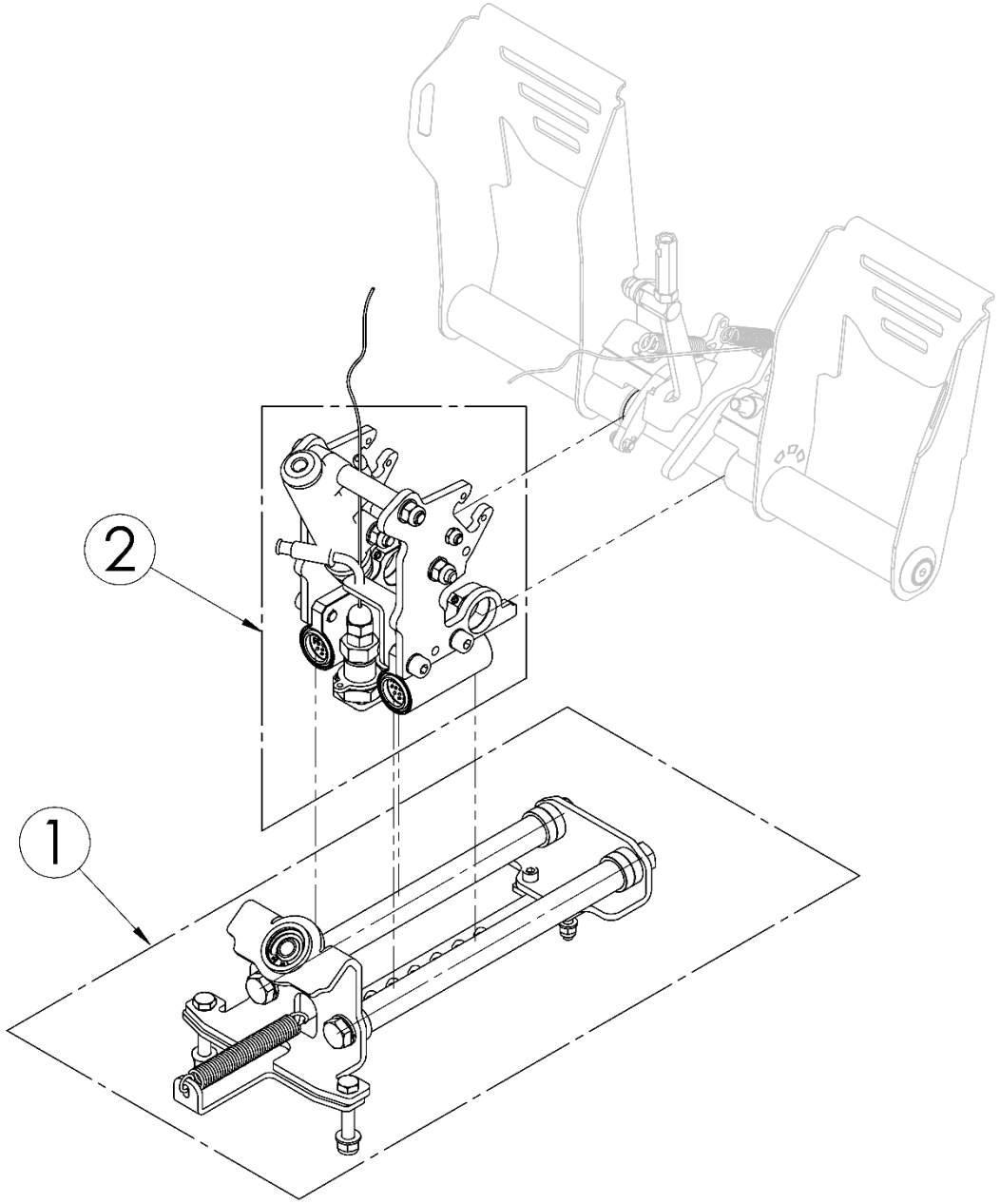

POS.	COD.	DESCRIZIONE	*DESCRIPTION*
1	FM0.07145	GUIDE COMPLETE PEDALIERA CENT 2.0	*COMPLETE FOOTREST SLIDERS CENT 2.0*
2	FM0.07144	PARTE CENTRALE CARRELLO CENT 2.0	*CENTRAL SLIDER PART CENT 2.0*

GUIDE COMPLETE PEDALIERA – COMPLETE FOOTREST SLIDERS

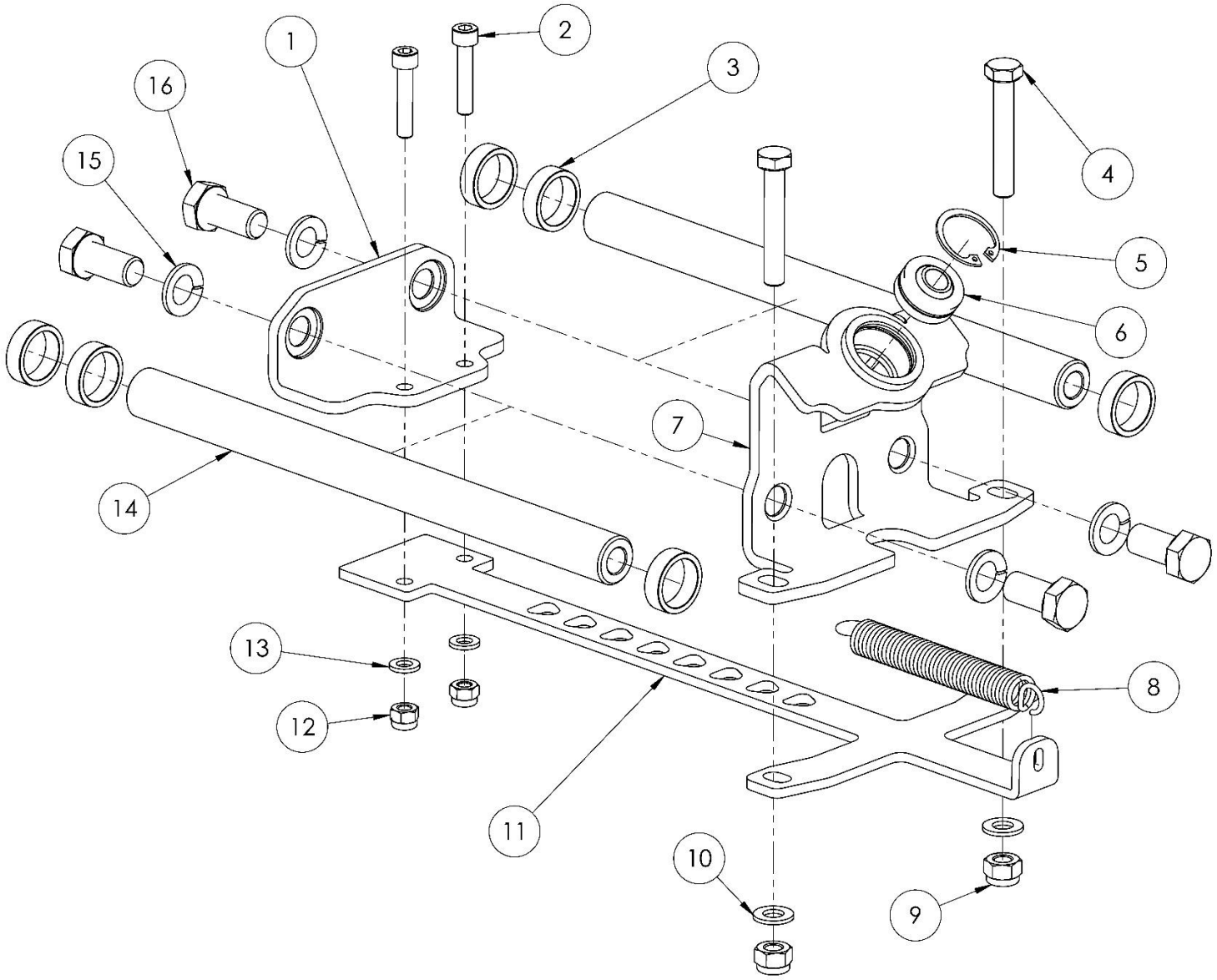

POS.	COD.	DESCRIZIONE	*DESCRIPTION*
1	SZ0.06816	SUPPORTO TUBI ANT. PEDALIERA CENT	*FOOTREST TUBE MOUNT FRONT CENT*
2	AFN.00281	VITE M 6X 30 CILINDRICA 5931	*M 6X30 SOCKET HEAD SCREW*
3	AFN.06309	DISTANZIALE H-ECOPUR PEDALIERA CE 20X25X7,5	*H-ECOPUR FOOTREST SPACER*
4	AFN.00443	VITE M 8X 50 ESAGONALE 5739	*M 8X50 HEXAGONAL HEAD SCREW*
5	AFN.06482	SEEGER PER FORI Ø26MM SP.1,5 UTILIZZI PESANTI	*INTERNAL SEEGER Ø26x1,5*
6	AFN.02198	UNIBALL PIANTONE Ø10 NOLEGGIO	*STEERING COULMN BALL DMSB*
7	SZ0.06815	SUPPORTO TUBI POST. PEDALIERA CENT	*REAR PEDAL TUBE SUPPORT*
8	SZ0.06602	MOLLA PEDALIERA 2.0 CENT	*FOOTREST SPRING*
9	AFN.00128	DADO M 8 AUTOBLOCK ALTO	*NUT M8 HIGH SELF-LOCKING*
10	AFN.00108	RONDELLA 8,5-18X2	*WASHER 8,5-18X2*
11	SZ0.06812	POSIZIONATORE FISSO PEDALIERA CENT	*FIXED PEDAL POSITIONER*
12	AFN.00264	DADO M 6 AUTOBLOCK ALTO	*NUT M6 HIGH SELF-LOCKING*
13	AFN.00105	RONDELLA 6,5-12X1,5	*WASHER 6,5-12X1,5*
14	SC0.02591	PERNO TUBOLARE Ø20X258 M8 CENT	*CENT CHROME TUBE 20X258*
15	AFN.03734	RONDELLA ELASTICA SPACCATA GROWER M12	*M12 GROWER WASHER*
16	AFN.05389	VITE M12X 20 ESAGONALE ZINC. 5739	*M12X20 HEXAGONAL HEAD SCREW*

PARTE CENTRALE CARRELLO – CENTRAL SLIDER PART

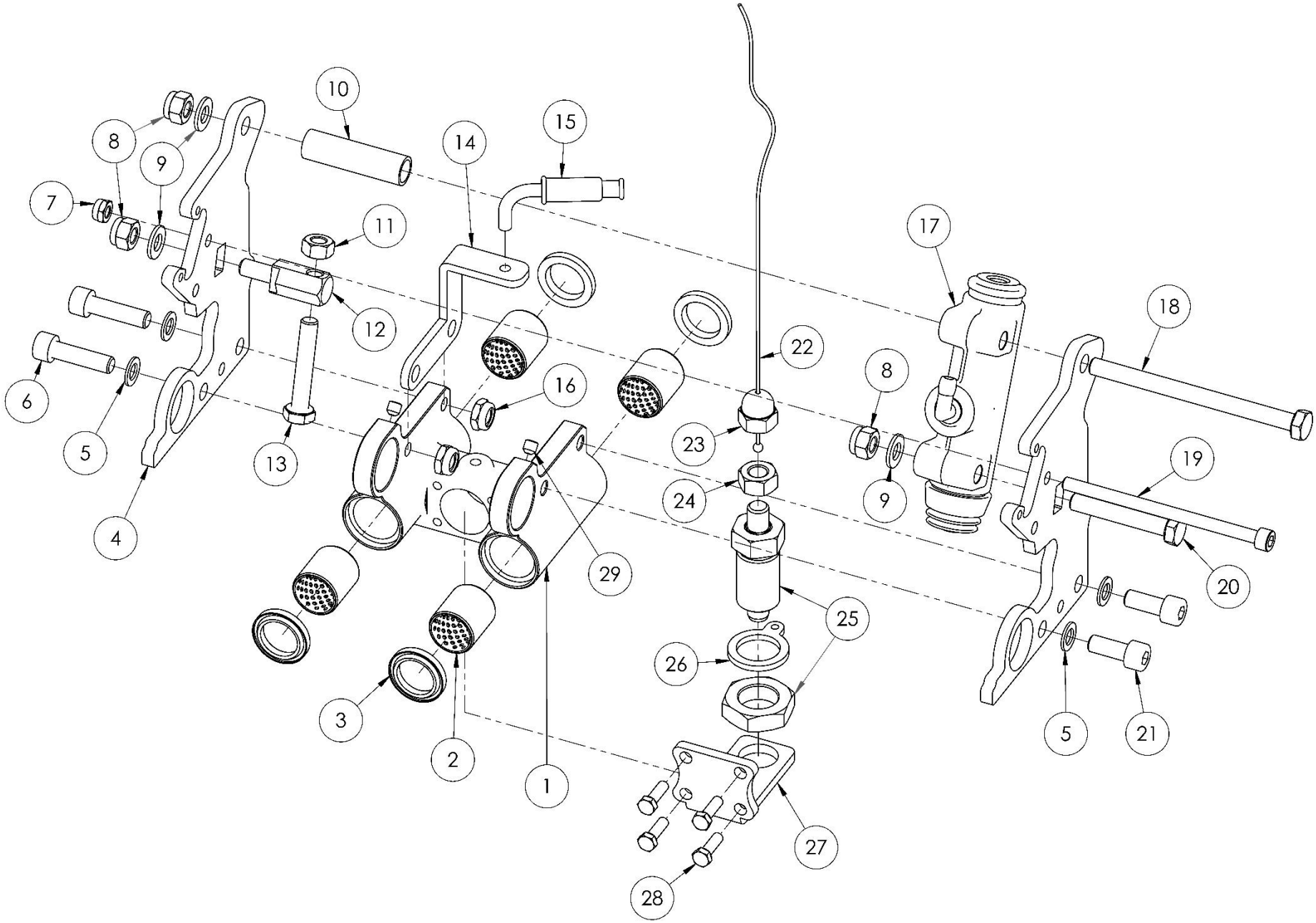

POS.	COD.	DESCRIZIONE	*DESCRIPTION*
1	SZ0.E001903	PARTE CENTRALE CARRELLO CE ALL.	*FOOTREST SLIDER CE*
2	AFS.06078	BRONZINA 20X25 PTC 2025 RK DJA MOND	*BUSHING 25x25 PTC 2025 RK DJA MOND*
3	AFS.06082	RASCHIATORE METALLICO DG 20X28X4	*METAL SCRAPER SEAL 20x28x4*
4	SZ0.06805	PIASTRA PEDALI PEDALIERA CENT	*FOOTREST PEDAL PLATE*
5	AFN.00133	RONDELLA 8,5-14X1	*8,5-14X1 WASHER*
6	AFN.00827	VITE M 8X 30 CILINDRICA 5931	*M 8X30 SOCKET HEAD SCREW*
7	AFN.00106	DADO M 6 AUTOBLOCK BASSO	*NUT M6 LOW SELF-LOCKING*
8	AFN.00128	DADO M 8 AUTOBLOCK ALTO	*NUT M8 HIGH SELF-LOCKING*
9	AFN.00350	RONDELLA 8,5-16X1,5	*WASHER 8,5-16X1,5*
10	SZ0.06811	TUBETTO FERMO PIASTRE PEDALIERA CENT	*FOOTREST PLATES SPACER*
11	AFN.0049D	DADO M 8 DX	*NUT M8*
12	SZ0.02727	REGISTRO FILO M8 CENTURION	*CABLE ADJUSTER M8 CENT*
13	AFN.00911	VITE M 8X 45 ESAGONALE 5739	*M 8X45 HEXAGONAL HEAD SCREW*
14	SZ0.06817	SUPPORTO REGISTRO PEDALIERA CENT	*FOOTREST ADJUSTER STAND*
15	AFS.07048	CURVA 90° PEDALIERA CENT 2.0	*90° CABLE GUIDE TUBE*
16	AFN.00160	DADO M 8 AUTOBLOCK BASSO	*NUT M8 LOW SELF-LOCKING*
17	FMN.02993	POMPA FRENO D19 CENTURION COMPLETA	*MASTER CYLINDER D19 COMPLETE CENT*
18	AFN.06745	VITE M 8X105 ESAGONALE 5739 META' FILETTO	*M 8X105 HEXAGONAL HEAD SCREW*
19	AFN.02290	VITE M 6X100 CILINDRICA 5931	*M6X100 HEX SOCKET SCREW*
20	AFN.00443	VITE M 8X 50 ESAGONALE 5739	*M 8X50 HEXAGONAL HEAD SCREW*
21	AFN.02545	VITE M 8X 20 CILINDRICA 5931	*M 8X 20 SOCKET HEAD SCREW*
22	AFS.02130	FILO GAS MM2200 CENTURION SP.1,5	*GAS CABLE CENT SP.1,5*
23	SL1.06838	DADO M10 CIECO CALOTTA SFERICA UNI 5721 FORATO	*DRILLED DOME CAP NUT*
24	AFN.00255	DADO M10	*NUT M10*
25	AFS.06947	SPINTORE BOTECO W803.R10	*BOTECO W803.R10 THRUST PIN*
26	SZ0.06914	RONDELLA PER MOLLA PEDALIERA CENT/CE	*FOOTREST SPRING WASHER*
27	SZ0.06813	POSIZIONATORE SCORREVOLE PEDALIERA CENT	*FOOTREST SLIDING POSITIONER*
28	AFN.04433	VITE M 5X 16 ESAGONALE 5739	*M5X16 HEXAGONAL SCREW*
29	CE00111	GRANO M 6X 6 TESTA PIANA	*M6X6 SET SCREW*

PEDALI – PEDALS

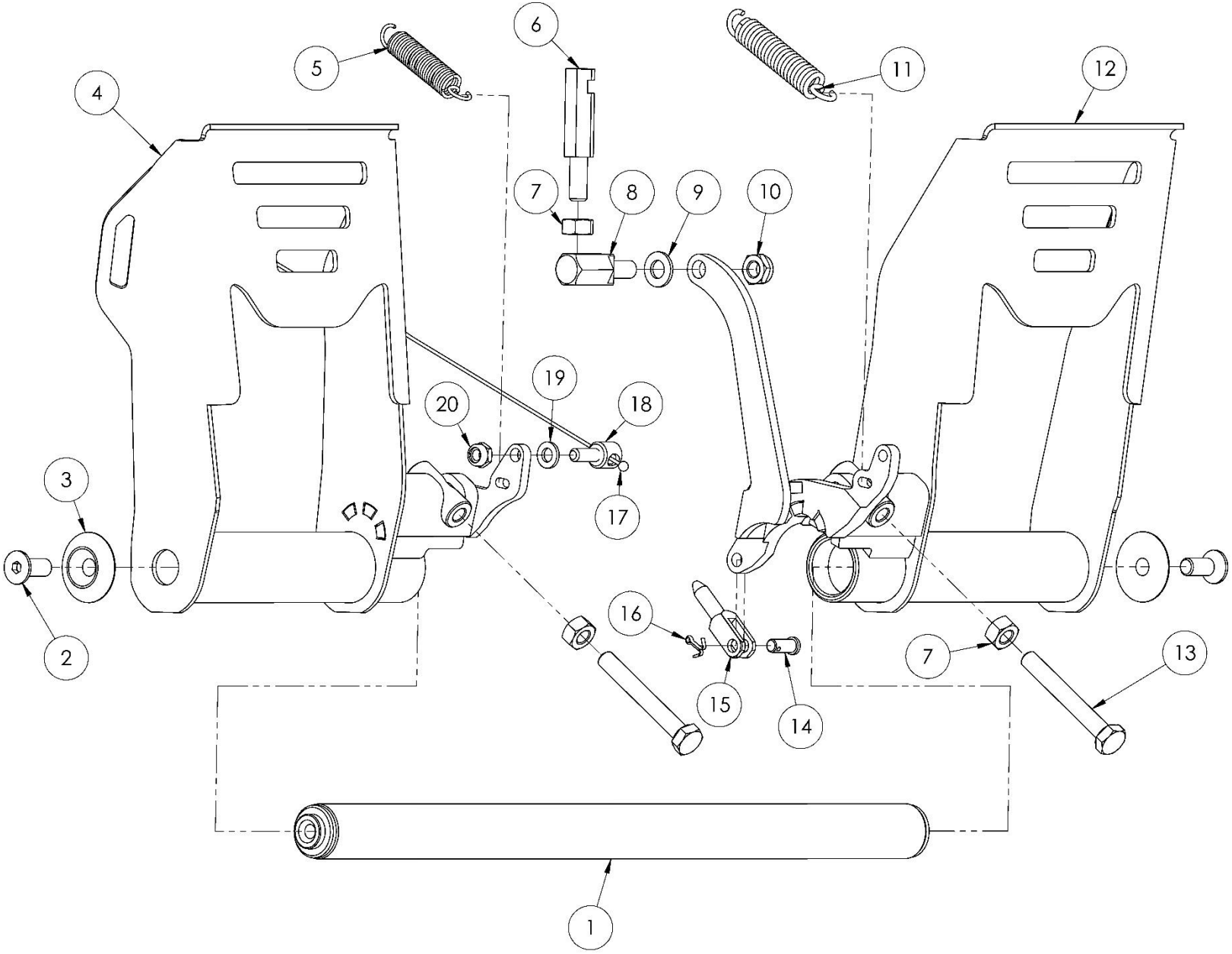

POS.	COD.	DESCRIZIONE	*DESCRIPTION*
1	SC0.E0062	ASSE PEDALE CENT/CE	*CENT/CE FOOTREST AXIS*
2	AFN.00290	VITE M 8X20 SVASATA 5933	*M8X20 COUNTERSUNK HEAD SCREW*
3	FAN.00260	RONDELLA 8 SEDILE ALL.NERA	*ALUMINUM SEAT WASHER BLACK 8*
4	SC0.6797D	PEDALE CENT/CE 2024 GAS DX	*GAS PEDAL CENT/CE*
5	SZ0.02203	MOLLA PEDALE CENT GAS	*PEDAL SPRING GAS/EXHAUST CENT*
6	SZ0.06413	PERNO ADATTATORE GUAINA GAS LUNGA CENT	*THROTTLE CABLE SHEATH ADAPTER PIVOT*
7	AFN.0049D	DADO M 8 DX	*NUT M8*
8	SZ0.02727	REGISTRO FILO M8 CENTURION	*CABLE ADJUSTER M8 CENT*
9	AFN.00350	RONDELLA 8,5-16X1,5	*WASHER 8,5-16X1,5*
10	AFN.00160	DADO M 8 AUTOBLOCK BASSO	*NUT M8 LOW SELF-LOCKING*
11	SZ0.02204	MOLLA PEDALE CENT FRENO	*PEDAL SPRING BRAKE CENT*
12	SC0.6797S	PEDALE CENT/CE 2024 FRENO SX	*BRAKE PEDAL CENT/CE*
13	AFN.02291	VITE M 8X 60 ESAGONALE 5739	*M 8X 60 HEXAGONAL HEAD SCREW*
14	SBN.00200	SPINA POMPA FRENI MM16	*MASTER CYLINDER PIN 16MM BLACK*
15	AFS.0586101	PUNTALE POMPA FRENI SP.6 CENT	*TOE MASTER CYLINDER SP.6 CENT*
16	AFN.00201	COPIGLIA	*MASTER CYLINDER SPLIT PIN*
17	AFS.02130	FILO GAS MM2200 CENTURION SP.1,5	*GAS CABLE CENT SP.1,5*
18	SBN.02396	PERNO FERMAFILO CENT	*CABLE ADJUSTER PIVOT BLACK*
19	AFN.00105	RONDELLA 6,5-12X1,5	*WASHER 6,5-12X1,5*
20	AFN.00106	DADO M 6 AUTOBLOCK BASSO	*NUT M6 LOW SELF-LOCKING*

POMPA FRENO – MASTER CYLINDER

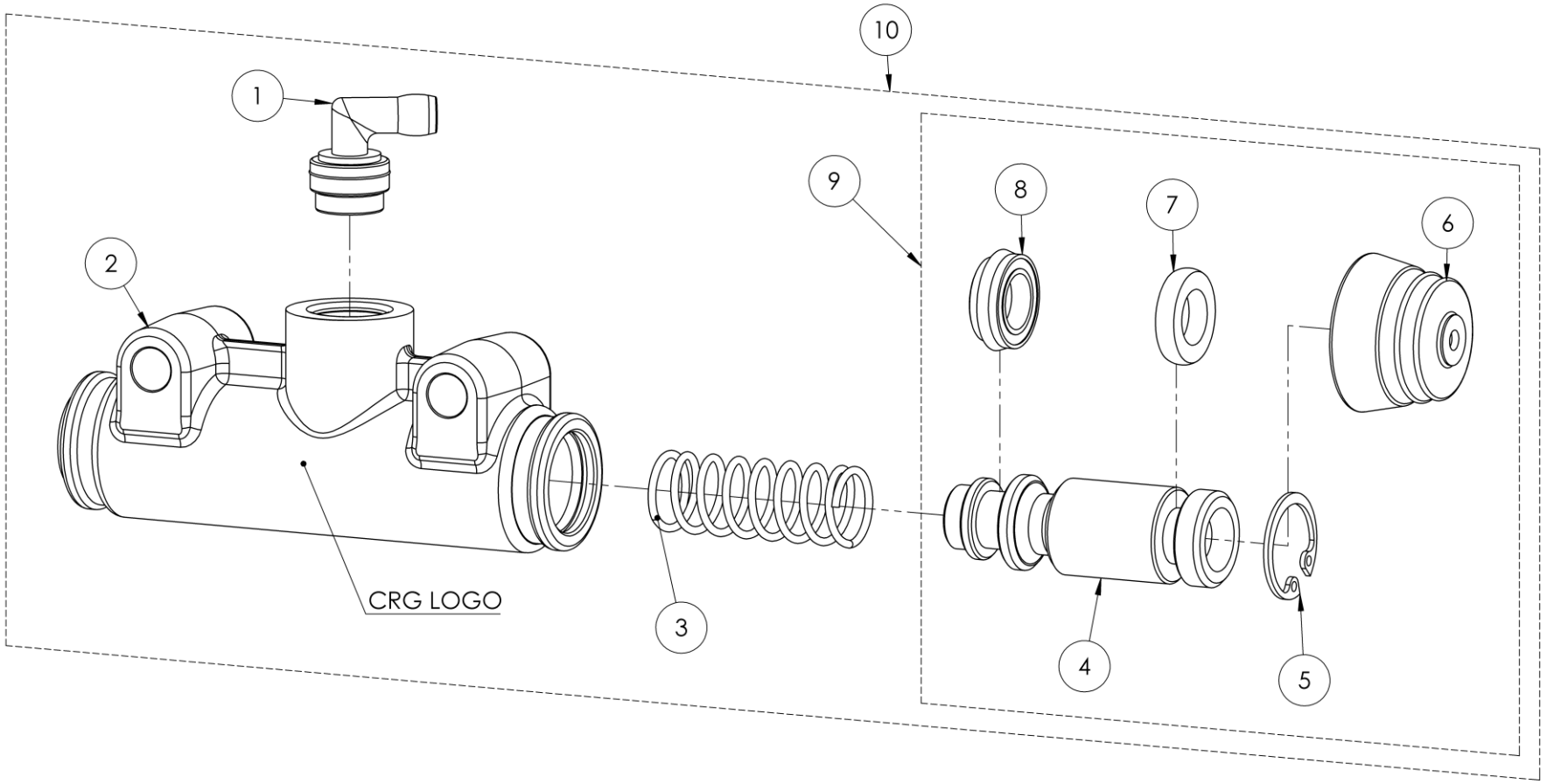

Pompa freno	Pompa completa	Kit revisione
Con logo CRG	FMN.02993	CRG.05567
Senza logo CRG	Non più in vendita, sostituire con FMN.02993	

Master cylinder	Complete master cylinder	Rebuild kit
With CRG logo	FMN.02993	CRG.05567
Without CRG logo	No longer for sale, replace with FMN.02993	

POS.	COD.	DESCRIZIONE	*DESCRIPTION*
1	AFS.05607	RACCORDO INNESTO SERBATOIO 90°	CENTURION MASTER CYLINDER 90° FITTING
2	SAN.02993	CORPO POMPA FRENO D19 NERO CENTURION	*MASTER CYLINDER BODY D.19 CENT*
3	AML.0299203	MOLLA POMPA FRENO D19 CENT	*MASTER CYLINDER SPRING D19 CENT*
4	SD1.06604	PISTONCINO POMPA FRENO D19 2.0 CENT	*MASTER CYL. PISTON D.19 2.0 CENT*
5	AFN.03000	SEEGER D20 POMPA FRENO CENTURION	*SEEGER BRAKE PUMP CENT D20*
6	AFS.02998	COPRIPOLVERE POMPA FRENO D19 CENTURION	*D19 MASTER CYLINDER DUST SHIELD*
7	AFS.05559	GOMMINO POMPA FRENO BOMBATO 19.05-12X4	*CENT MASTER CYLINDER FRONT OIL SEAL 19.05-12X4*
8	AFS.05560	GOMMINO POMPA FRENO DOPPIO LABBRO 19.05-10X7	*CENT MASTER CYLINDER REAR OIL SEAL*
9	CRG.05567	KIT REVISIONE POMPA FRENO D19 CENT 2024	*D19 CENTURION MASTER CYLINDER REBUILDING KIT*
10	FMN.02993	POMPA FRENO D19 CENTURION COMPLETA	*MASTER CYLINDER D19 COMPLETE CENT*

POSIZIONATORE PEDALE – PEDAL LOCATOR

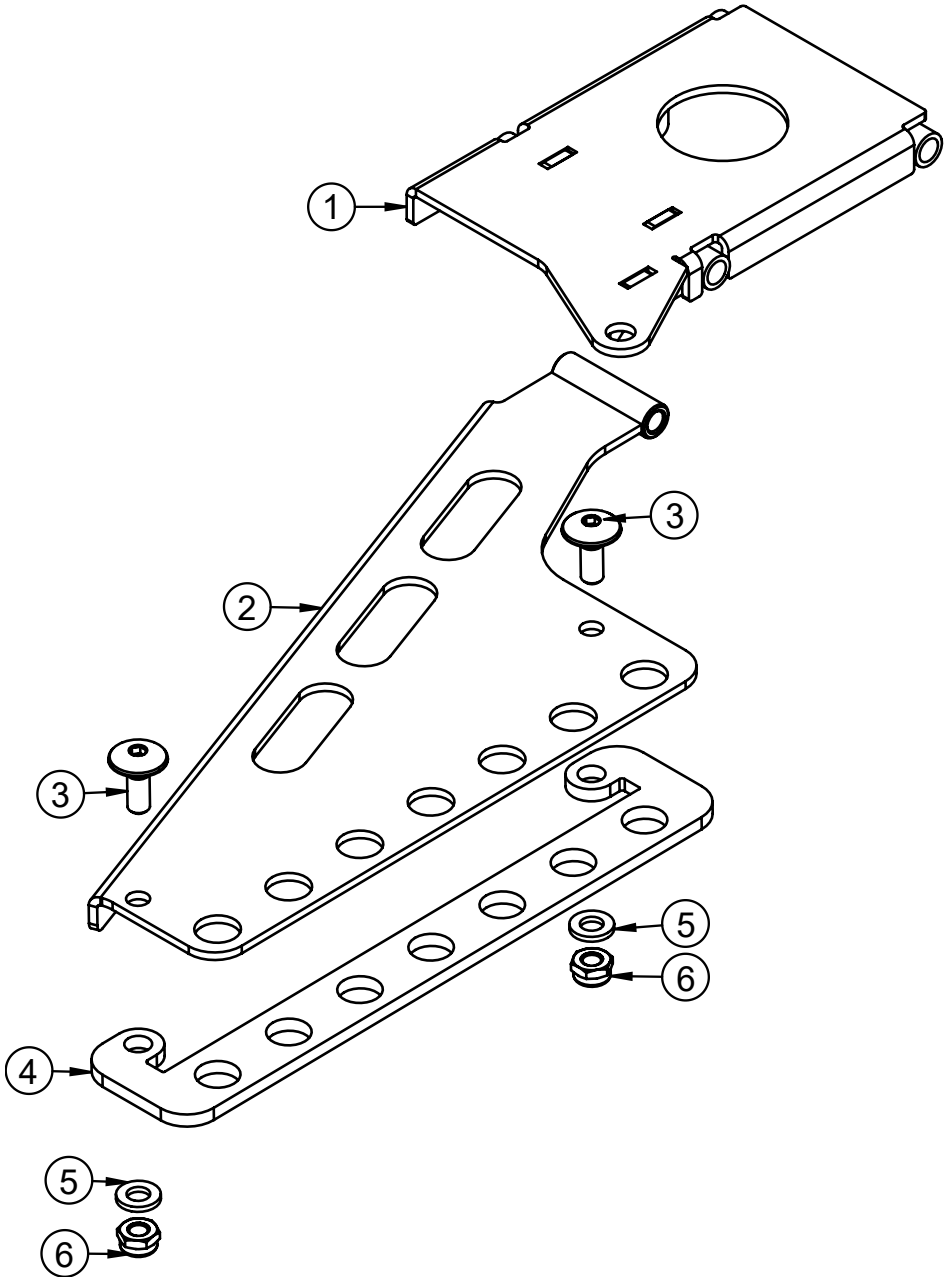

POS.	COD.	DESCRIZIONE	*DESCRIPTION*
1	SZ0.00091	DISTANZIALE SOTTOTUBOLARE ANT. CENT	*CENTURION FRONT BOTTON SPACER CENTURION*
2	SZ0.00081	DISTANZIALE SOTTOTUBOLARE POST. CENT	*CENTURION REAR BOTTON SPACER*
3	AFS.00261	VITE TESTA TONDA LARGA M 6X 16 PIANALE	*FLOOR TRAY SCREW LARGE ROUND HEAD M6X16*
4	SZ0.03130	SPESSORE POSIZIONATORE CENTURION	*CENTURION ADJUSTMENT SPACER*
5	AFN.00105	RONDELLA 6,5-12X1,5	*WASHER 6,5-12X1,5*
6	AFN.00106	DADO M 6 AUTOBLOCK BASSO	*NUT M6 LOW SELF-LOCKING*

BLOCCO CARRELLO PEDALE - PEDAL SLIDER LOCK – **LEGACY <2025**

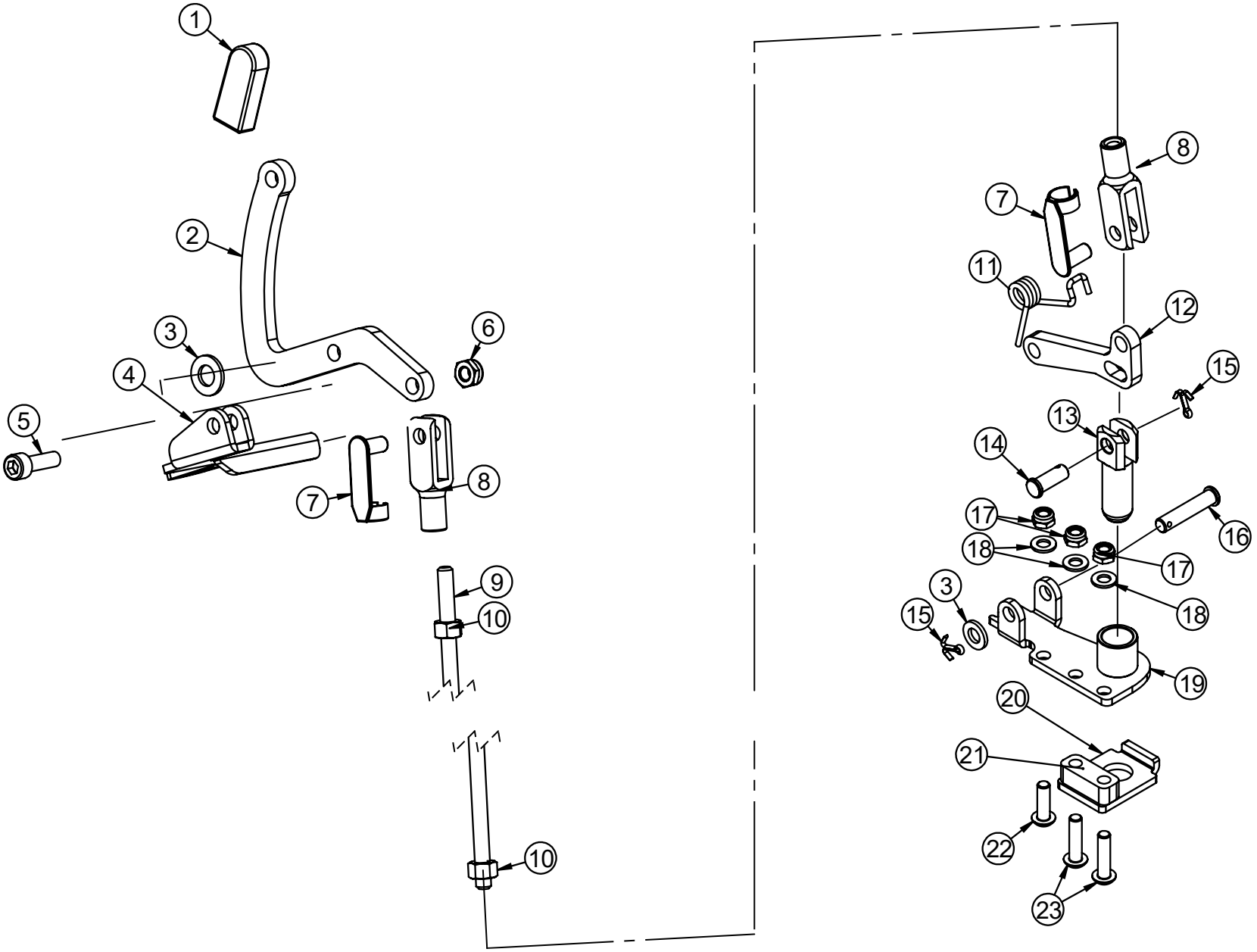

POS.	COD.	DESCRIZIONE	*DESCRIPTION*
1	AFS.02222	CAPPUCCIO VINILE ROSSO CENT	*SILICON CAP RED CENT*
2	SZ0.00468	LEVA FIX CARRELLO PEDALE CENT 2014	*TROLLEY LEVER CENT*
3	AFN.00263	RONDELLA 6,5-18X1,6	*WASHER 6,5-18X1,6*
4	SZ0.03126	SUPPORTO LEVA DISTANZIALE CENTURION	*CENTURION SPACER LEVER SUPPORT*
5	AFN.02144	VITE M 6X 20 BOMBATA 7380	*M6X20 BUTTON HEAD SCREW*
6	AFN.00106	DADO M 6 AUTOBLOCK BASSO	*NUT M6 LOW SELF-LOCKING*
7	AFS.00224	CLIPS STD	*CLIPS STD*
8	AFS.00216	FORCHETTA SEMPLICE STD SP.6	*SIMPLE FORK STANDARD*
9	SBN.01518	ASTA FRENO ZINCATA CM.30	*BRAKE ROD CM.30*
10	AFN.00093	DADO M 6	*NUT M 6*
11	SZ0.02500	MOLLA FIX DISTANZIALE CENTURION	*FIX SPRING FOR SPACER CENTURION*
12	SZ0.03131	LEVA FISSAGGIO CARRELLO PEDALE CENTURION	*LEVER FOR TROLLEY CENTURION*
13	SZ0.02542	PERNO FIX DISTANZIALE D12 CENTURION	*CENTURION D12 FIXED PIVOT SPACER*
14	SBN.00214	SPINA RIPARTITORE MM17,5	*DIVIDER PIN 17,5MM*
15	AFN.00201	COPIGLIA	*MASTER CYLINDER SPLIT PIN*
16	SZ0.00798	SPINA 6X25 CENTURION ZINCATA	*CENT PIN 6X25*
17	AFN.00360	DADO M 5 AUTOBLOCK BASSO	*NUT M 5 LOW SELF-LOCKING*
18	AFN.00361	RONDELLA 5,5-15X1,5	*WASHER 5,5-15X1,5*
19	SZ0.03132	FISSAGGIO CARRELLO PEDALE CENT 2013	*TROLLEY CONTROL SYSTEM CENTURION*
20	SZ0.03129	PIASTRINA GUIDA PERNO POSIZIONATORE CENT	*PLATE FOR TROLLEY CENTURION*
21	SZ0.02535	SPESSORE 8X10X30 CENTURION	*SPACER CENT 8X10X30*
22	AFN.01525	VITE M 5X 16 BOMBATA 7380	*M5X16 CONVEX HEAD SCREW*
23	AFN.00090	VITE M 5X 25 BOMBATA 7380	*M5X25 CONVEX HEAD SCREW*

BLOCCO CARRELLO PEDALE - PEDAL SLIDER LOCK

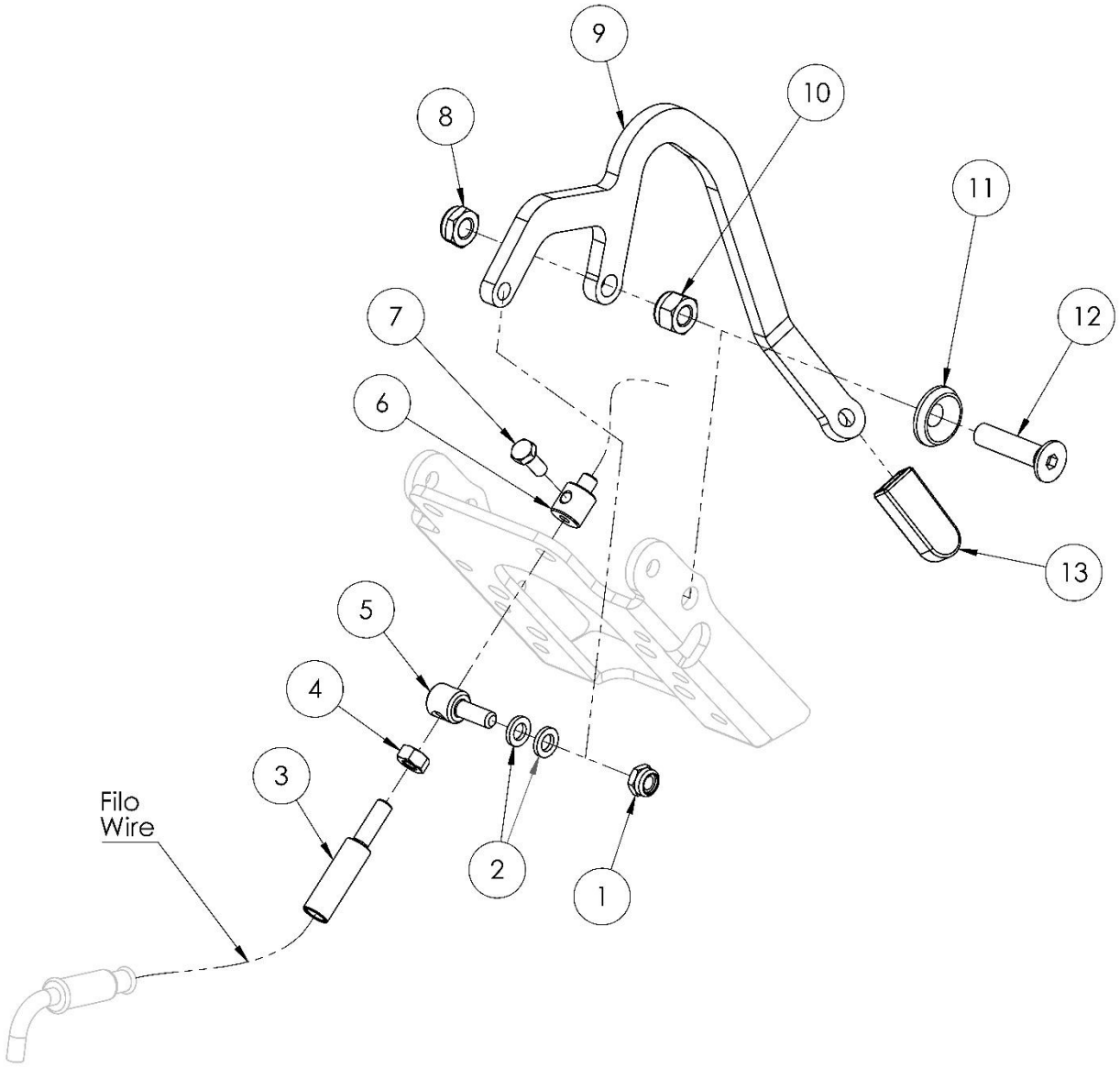

BLOCCO CARRELLO PEDALE – PEDAL TROLLEY LOCK

POS.	COD.	DESCRIZIONE	*DESCRIPTION*
1	AFN.00106	DADO M 6 AUTOBLOCK BASSO	NUT M6 LOW SELF-LOCKING
2	AFN.00287	RONDELLA 8,5-14X1,5	*WASHER 8,5-14X1,5*
3	SZ0.00390	REGISTRO FILO M6 CENT	*CABLE ADJUSTER M6 CENTBI*
4	AFN.00093	DADO M 6	*NUT M 6*
5	SBN.02396	PERNO FERMAFILO CENT	*CABLE ADJUSTER PIVOT BLACK*
6	AFS.00514	MORSETTO FILO RR	*CABLE CLAMP*
7	CE00107	VITE M 5X 12 ESAGONALE 5739	*M5X12 HEX SCREW*
8	AFN.00160	DADO M 8 AUTOBLOCK BASSO	*NUT M8 LOW SELF-LOCKING*
9	SZ0.0046808	LEVA FIX CARRELLO PEDALE CENT 2026	*TROLLEY LEVER CENT 2026*
10	AFN.00128	DADO M 8 AUTOBLOCK ALTO	*NUT M8 HIGH SELF-LOCKING*
11	SAN.00146	RONDELLA 8 SVASATA NERA	*WASHER 8 COUNTERSUNK BLACK*
12	AFN.00265	VITE M 8X 35 SVASATA 5933	*M 8X 35 COUNTERSUNK HEAD SCREW*
13	AFS.02222	CAPPUCCIO VINILE ROSSO CENT	*SILICON CAP RED CENT*

MOLLA RITORNO PEDALE – PEDAL RETURN SPRING

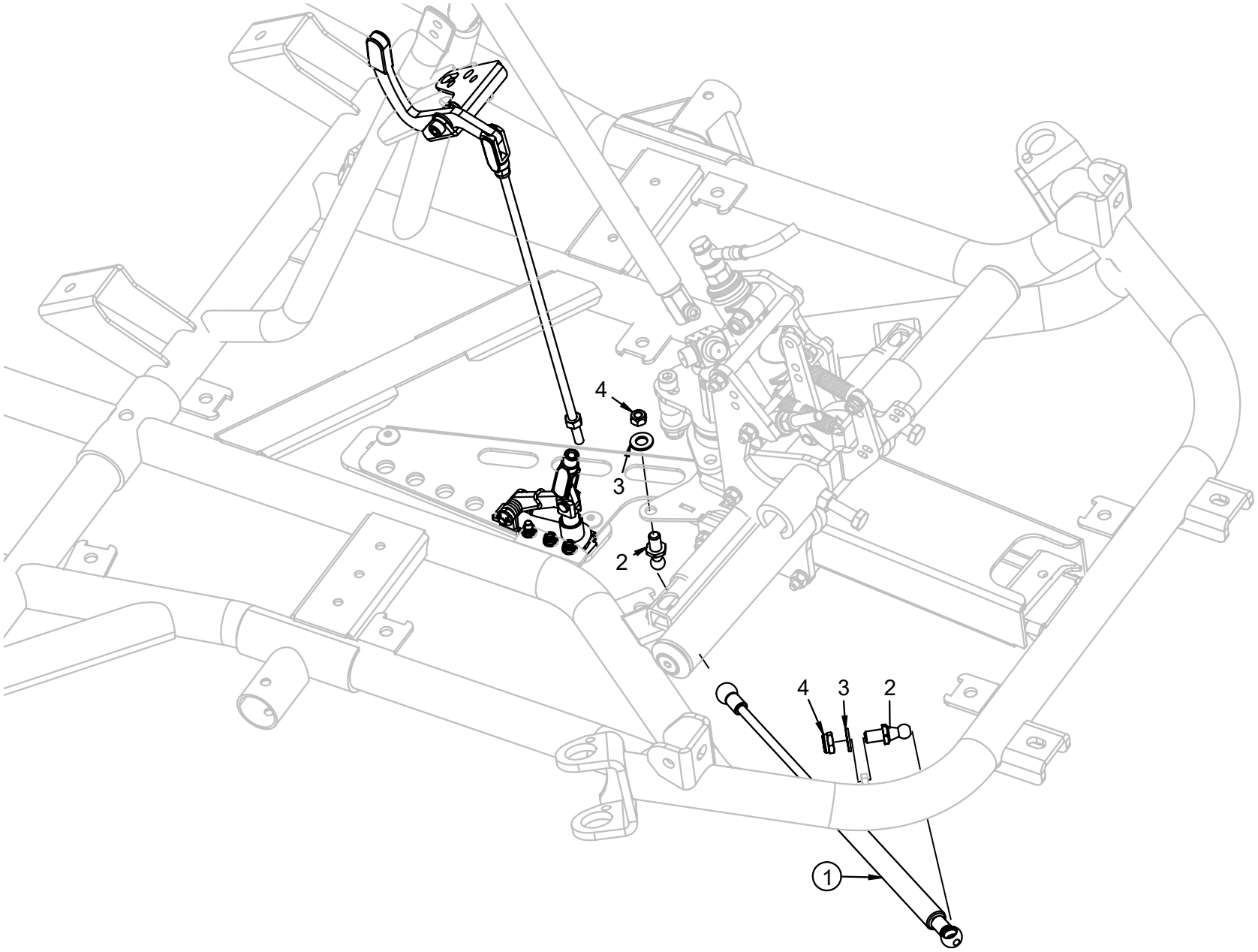

MOLLA RITORNO PEDALE – PEDAL RETURN SPRING

POS.	COD.	DESCRIZIONE	*DESCRIPTION*
1	AFS.00319	MOLLA A GAS BE 120 CENTURION	*CENTURION GAS SPRING 120*
2	AFS.00303	ROTULA D10 REF 92990 CENTURION	*CENTURION JOINT D10-M8 FOR GAS SPRING*
3	AFN.00133	RONDELLA 8,5-14X1	*8,5-14X1 WASHER*
4	AFN.00160	DADO M 8 AUTOBLOCK BASSO	*NUT M8 LOW SELF-LOCKING*

TANICA SERBATOIO 8.5 LT – FUEL TANK 8.5 LT

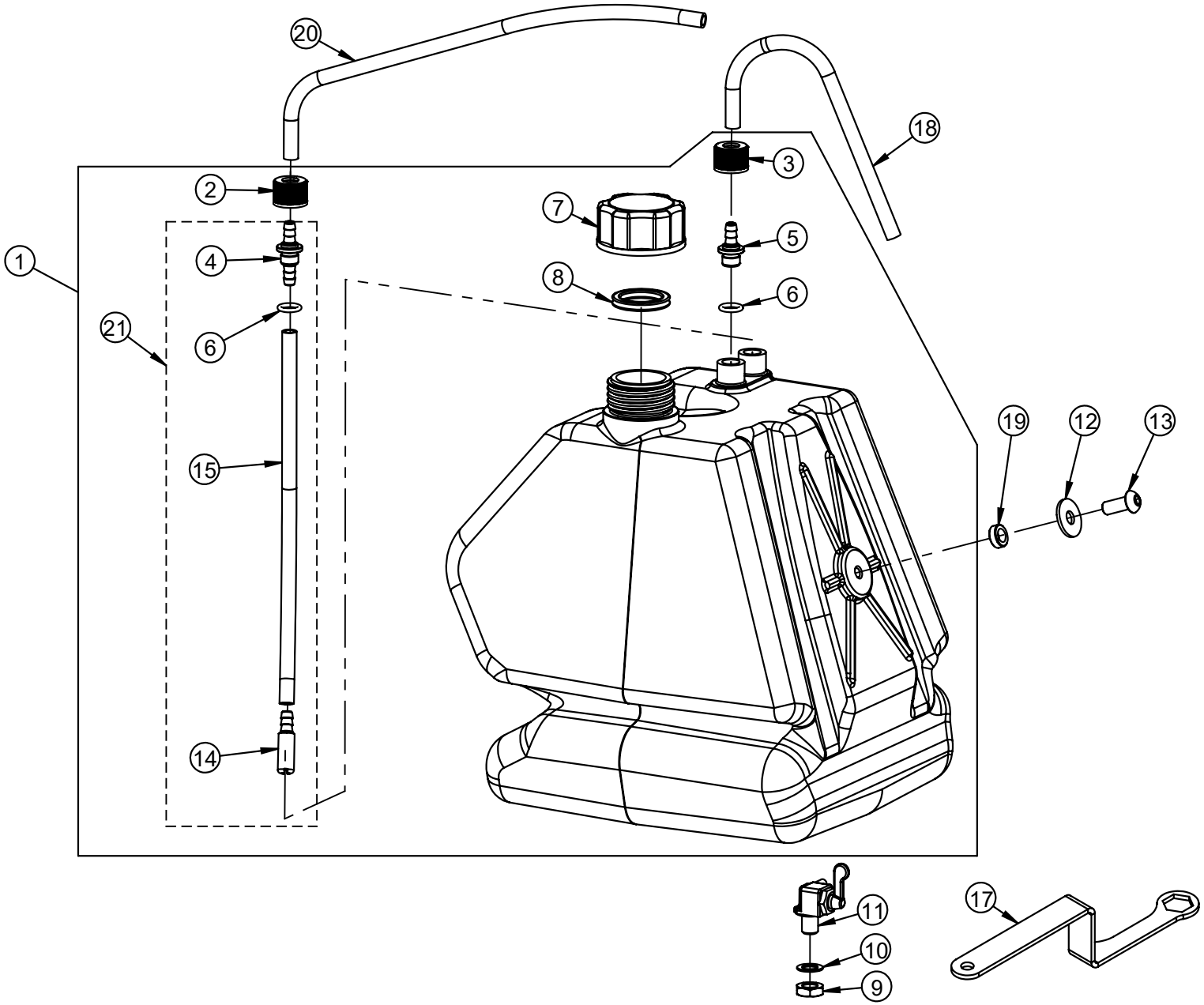

TANICA SERBATOIO 8.5 LT – FUEL TANK 8.5 LT

POS.	COD.	DESCRIZIONE	*DESCRIPTION*
1	FM0.00138	TANICA LT.8,5 KF COMPLETA BIANCA	*FUEL TANK LT.8,5 COMPLETE WHITE*
2	AFS.00142	TAPPINO PESCANTE TANICA (ROSSO)	*FUEL RESEARCH FITTING TAP*
3	AFS.00141	TAPPINO SFIATO TANICA (NERO)	*CAP FUEL TANK*
4	SL1.00149	RACCORDO PESCANTE TANICA	*FUEL TANK CATCH FITTING*
5	SL1.00151	RACCORDO SFIATO	*BLEEDER FITTING*
6	AFN.01379	OR RACCORDO TANICA	*FUEL TANK FITTING O-RING*
7	AFS.00143	TAPPO TANICA	*FUEL TANK CAP*
8	AFN.00144	GUARNIZIONE TAPPO TANICA	*FUEL TANK CAP RING*
9	AFS.00325	DADO RACCORDO TANICA M10	*NUT FITTING TANK M10*
10	AFN.00323	RONDELLA 10 -16X1 FIBRA	*FIBER WASHER 10-16X1*
11	AFS.03349	RUBINETTO RITORNO BENZINA CENT	*RETURN VALVE PETROL CENT*
12	AFN.02415	RONDELLA 8,5-24X2	*8,5-24X2 WASHER*
13	AFN.00379	VITE M 8X 20 BOMBATA 7380	*M 8X20 CONVEX HEAD SCREW*
14	SL1.00147	PESCANTE	*FUEL TANK CATCH*
15	SL1.00322	TUBO PESCANTE TANICA LT.8,5 (CM.24)	*FUEL PIPE 24CM*
17	SZ0.03729	CHIAVE 17 RUBINETTO SERBATOIO (DADO INTERNO)	*17MM WRENCH FOR FUEL TANK TAP*
18	AMS.00139	TUBO BENZINA AL METRO	*FUEL PIPE PER METER*
19	FBN.00252	SPESSORE 8,5-14X 5 BARRETTA	*ROD SPACER 8,5-14X5 TRACK ROD*
20	AMS.04241	TUBO BENZINA AL METRO 5X10,5 CENTURION	*FUEL PIPE PER METER CENT 5X10,5*
21	CRG.00147	PESCANTE TANICA LT.8,5 COMPLETO	*FUEL TANK LT.8,5 SUCTION FITTING*

TANICA SERBATOIO 12.0 LT – FUEL TANK 12.0 LT

FROM MARCH 2024- REQUIRES UPDATED CHASSIS AND STEERING

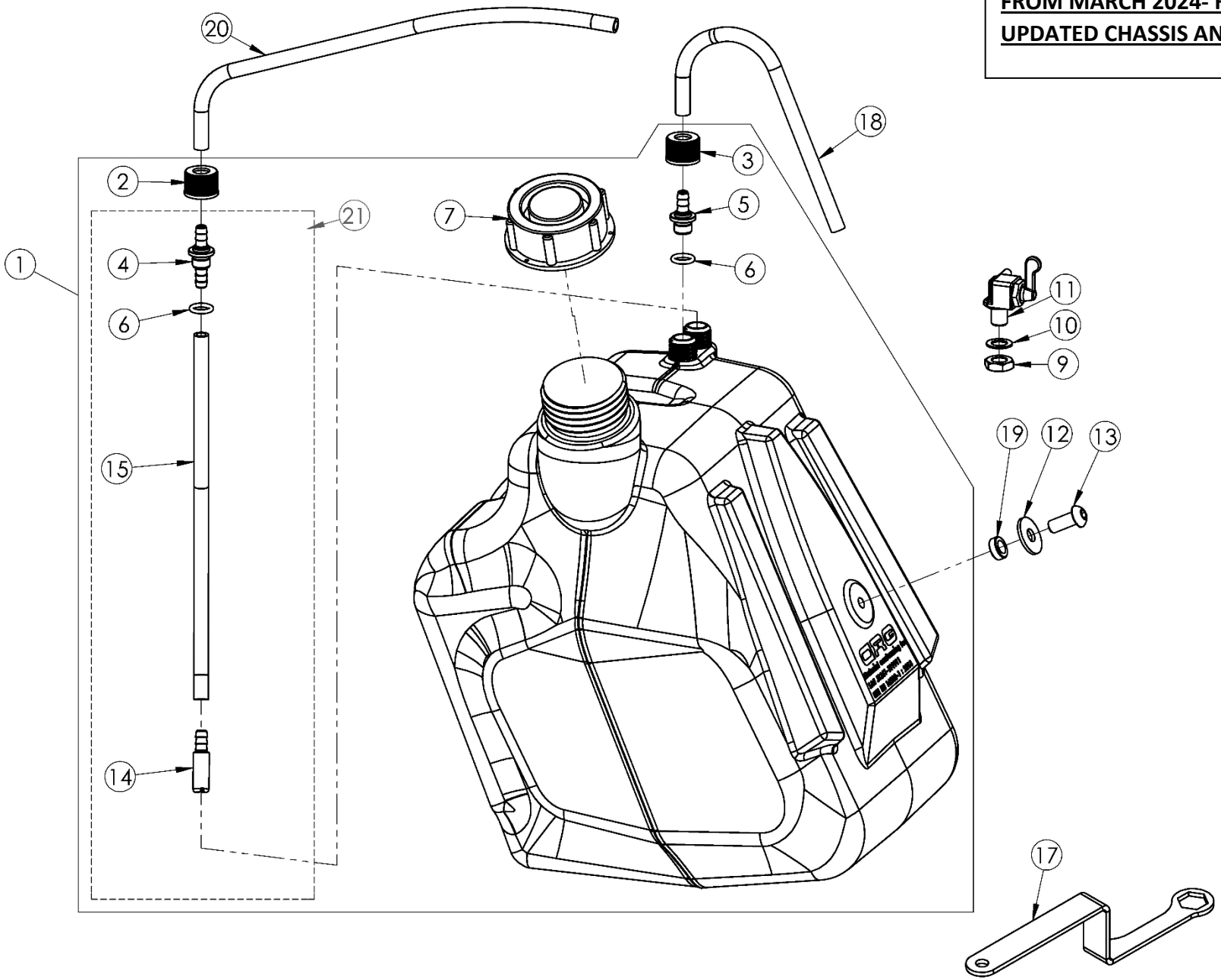

POS.	COD.	DESCRIZIONE	*DESCRIPTION*
1	FM0.06382	TANICA LT.12 MAGGIORATA CENT COMPLETA	*FUEL TANK LT.12.0 COMPLETE*
2	AFS.00142	TAPPINO PESCANTE TANICA (ROSSO)	*FUEL RESEARCH FITTING TAP*
3	AFS.00141	TAPPINO SFIATO TANICA (NERO)	*CAP FUEL TANK*
4	SL1.00149	RACCORDO PESCANTE TANICA	*FUEL TANK CATCH FITTING*
5	SL1.00151	RACCORDO SFIATO	*BLEEDER FITTING*
6	AFN.01379	OR RACCORDO TANICA	*FUEL TANK FITTING O-RING*
7	AFS.06565	TAPPO TANICA X TANICA LT.12 MAGGIORATA CENT	*FUEL TANK CAP X TANK LT.12*
8	AFN.00144	GUARNIZIONE TAPPO TANICA	*FUEL TANK CAP RING*
9	AFS.00325	DADO RACCORDO TANICA M10	*NUT FITTING TANK M10*
10	AFN.00323	RONDELLA 10 -16X1 FIBRA	*FIBER WASHER 10-16X1*
11	AFS.03349	RUBINETTO RITORNO BENZINA CENT	*RETURN VALVE PETROL CENT*
12	AFN.02415	RONDELLA 8,5-24X2	*8,5-24X2 WASHER*
13	AFN.00379	VITE M 8X 20 BOMBATA 7380	*M 8X20 CONVEX HEAD SCREW*
14	SL1.00147	PESCANTE	*FUEL TANK CATCH*
15	SL1.00322	TUBO PESCANTE TANICA LT.8,5 (CM.24)	*FUEL PIPE 24CM*
17	SZ0.03729	CHIAVE 17 RUBINETTO SERBATOIO (DADO INTERNO)	*17MM WRENCH FOR FUEL TANK TAP*
18	AMS.04241	TUBO BENZINA AL METRO 5X10,5 CENTURION	*FUEL PIPE PER METER CENT 5X10,5*
19	FBN.00252	SPESSORE 8,5-14X 5 BARRETTA	*ROD SPACER 8,5-14X5 TRACK ROD*
20	AMS.00139	TUBO BENZINA AL METRO	*FUEL PIPE PER METER*
21	CRG.00147	PESCANTE TANICA LT.8,5 COMPLETO	*FUEL TANK LT.8,5 SUCTION FITTING*

BATTERIA – BATTERY

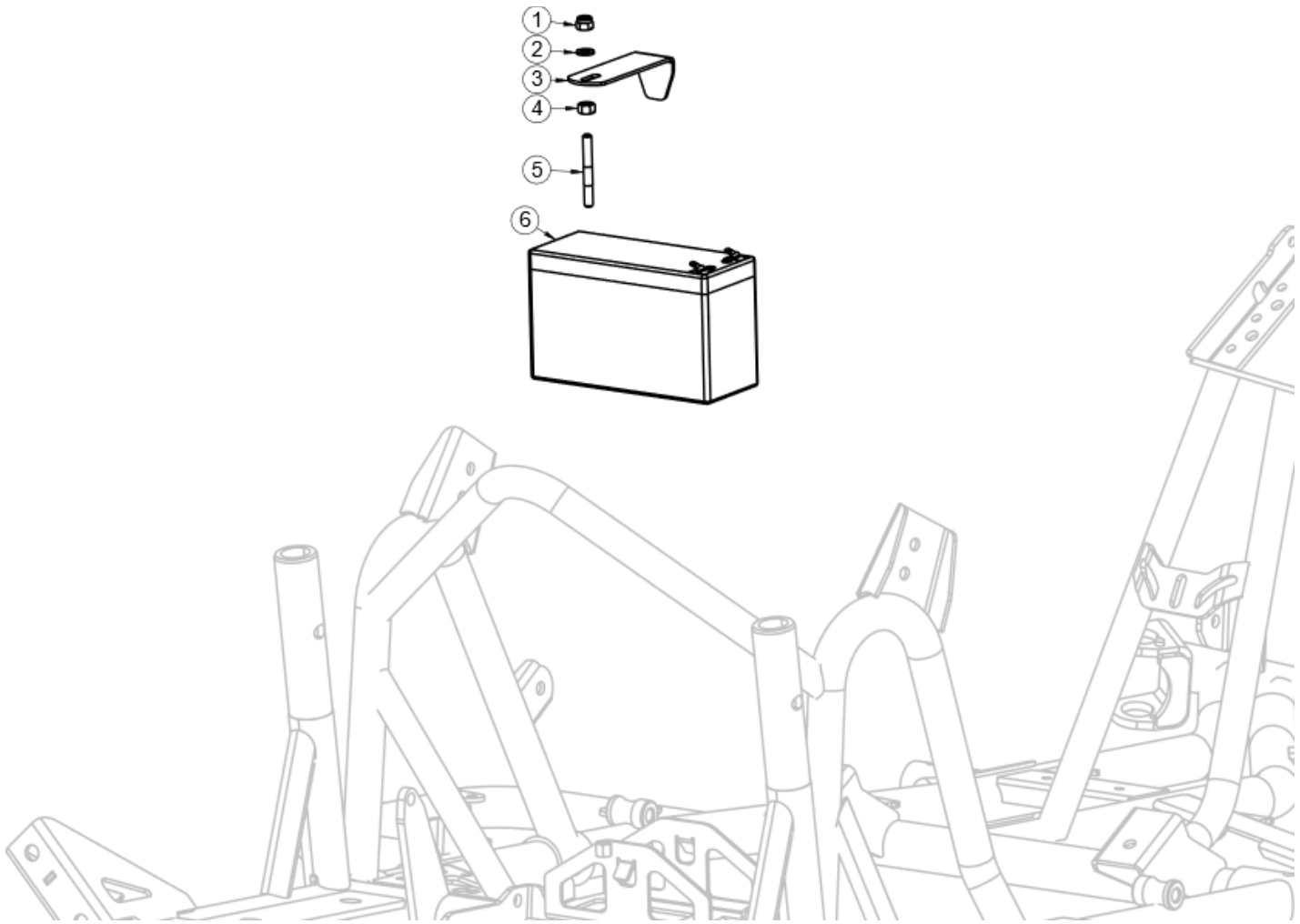

POS.	COD.	DESCRIZIONE	*DESCRIPTION*
1	AFN.00106	DADO M 6 AUTOBLOCK BASSO	*NUT M6 LOW SELF-LOCKING*
2	AFN.00105	RONDELLA 6,5-12X1,5	*WASHER 6,5-12X1,5*
3	SZ0.04190	PIASTRA FISSAGGIO BATTERIA CENT	*BATTERY FIXING PLATE*
4	AFN.00093	DADO M 6	*NUT M 6*
5	AFS.00274	PRIGIONIERO M 6 X 50	*PRISONER M 6X50*
6	AFS.02360	BATTERIA CENT 12V-7,2 AH	*STOP BATTERY V.12 A.7,2 CENT*

PINZA FRENO Ø30 – BRAKE CALIPER Ø30 - **LEGACY**

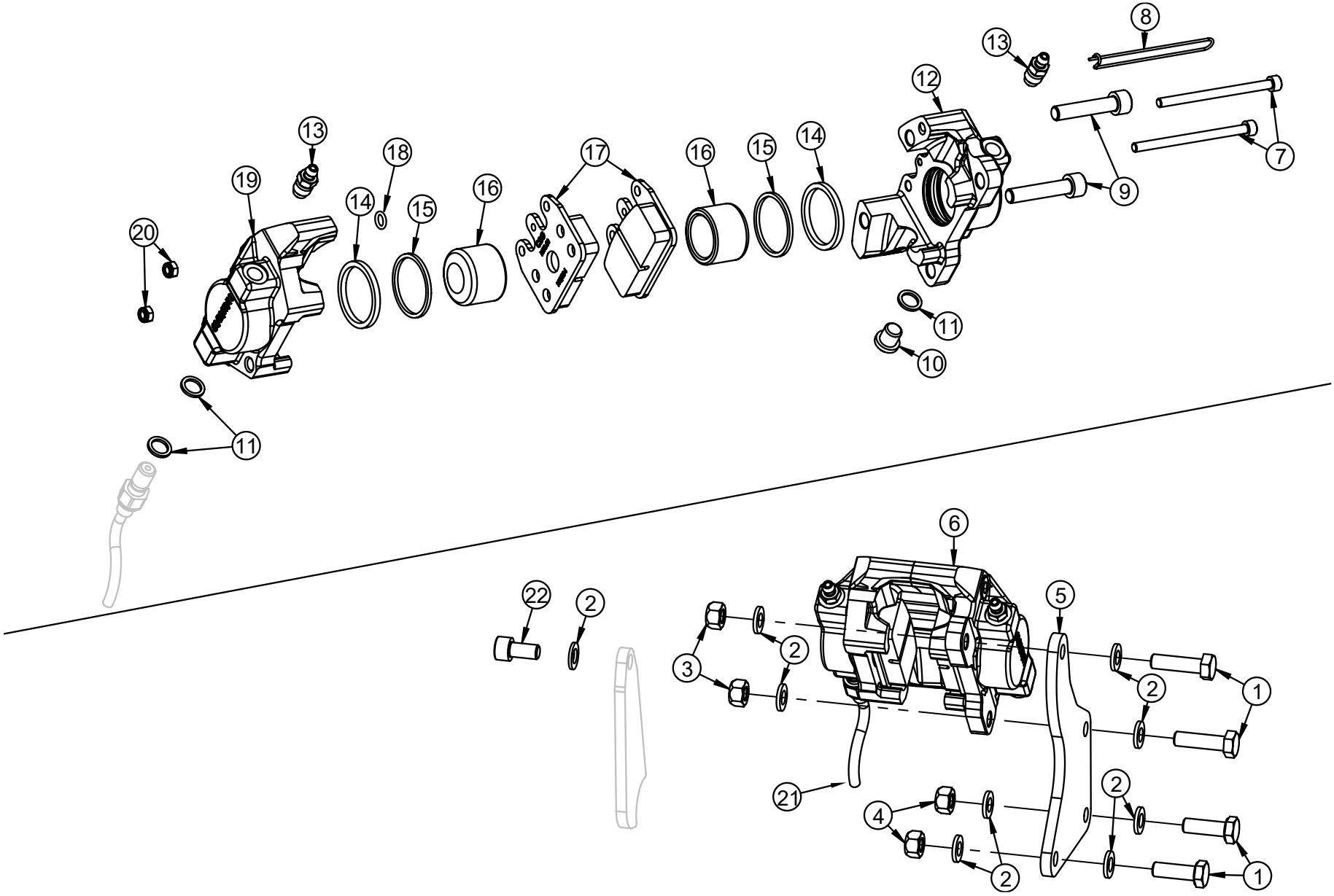

POS.	COD.	DESCRIZIONE	*DESCRIPTION*
1	AFN.00107	VITE M 8X 25 ESAGONALE 5739	*M 8X25 HEXAGONAL HEAD SCREW*
2	AFN.00133	RONDELLA 8,5-14X1	*8,5-14X1 WASHER*
3	AFN.00286	DADO M 8 METALBLOCK	*NUT M 8 METALBLOCK*
4	AFN.00128	DADO M 8 AUTOBLOCK ALTO	*NUT M8 HIGH SELF-LOCKING*
5	SZ0.02102	PIASTRA SUPPORTO PINZA V05 Ø32 CENTURION	*REAR BRAKE CALIPER SUPPORT CENT*
6	FM0.03621	PINZA POSTERIORE CRG RENT Ø30 COMPLETA	*REAR BRAKE CALIPER Ø30 COMPL. CENT*
7	AFN.01679	VITE M 5X 80 CILINDRICA 5931	*M 5X80 SOCKET HEAD SCREW*
8	AFS.01682	SPINA SICUREZZA PINZA POST.V05/V08	*REAR SAFETY PIN*
9	AFN.00159	VITE M 8X 45 CILINDRICA 5931	*M 8X45 SOCKET HEAD SCREW*
10	SBN.00369	TAPPO M10 V11	*CALIPER CAP M10 V11*
11	AFN.00186	RONDELLA 10,5-14X2 RAME	*COPPER WASHER 10,5-14X2*
12	SAN.1800D	SEMI PINZA POST.BK-11 30 DX NERA	*HALF REAR BRAKE CALIPER V11 30 RIGHT BLACK*
13	SZ0.00184	SPURGO M10 V11	*BLEEDER M10 V11*
14	AFS.03022	GOMMINO PINZA POSTERIORE Ø30 V11	*REAR BRAKE CALIPER SEAL Ø30 V11*
15	AFS.03023	GOMMINO PARAPOLVERE Ø30 V09/V10	*DUST GUARD SEAL Ø30*
16	SD1.03475	PISTONCINO PINZA POST NOL Ø30	*BRAKE CALIPER PISTON Ø30 RENT*
17	AFS.01745	PASTIGLIA FRENO POST. V11 ROSSA	*REAR BRAKE PAD V11 RED*
18	AFN.00182	OR PINZA 6 X 2 V11 POSTERIORE	*REAR O-RING CALIPER 6X2 V11*
19	SAN.1800S	SEMI PINZA POST.BK-11 30 SX NERA	*HALF REAR BRAKE CALIPER V11 30 LH WITH FITTINGS*
20	AFN.00360	DADO M 5 AUTOBLOCK BASSO	*NUT M 5 LOW SELF-LOCKING*
21	AFS.03097	TUBO FRENO OCCHIELLO MM1570 ROSSO CENT/CENTMINI	*BRAKE TUBE EYELET MM1570*
22	TCI.08X016	VITE M 8X 16 CILINDRICA 5931	*M 8X 16 SOCKET HEAD SCREW*

PINZA FRENO Ø32 – BRAKE CALIPER Ø32

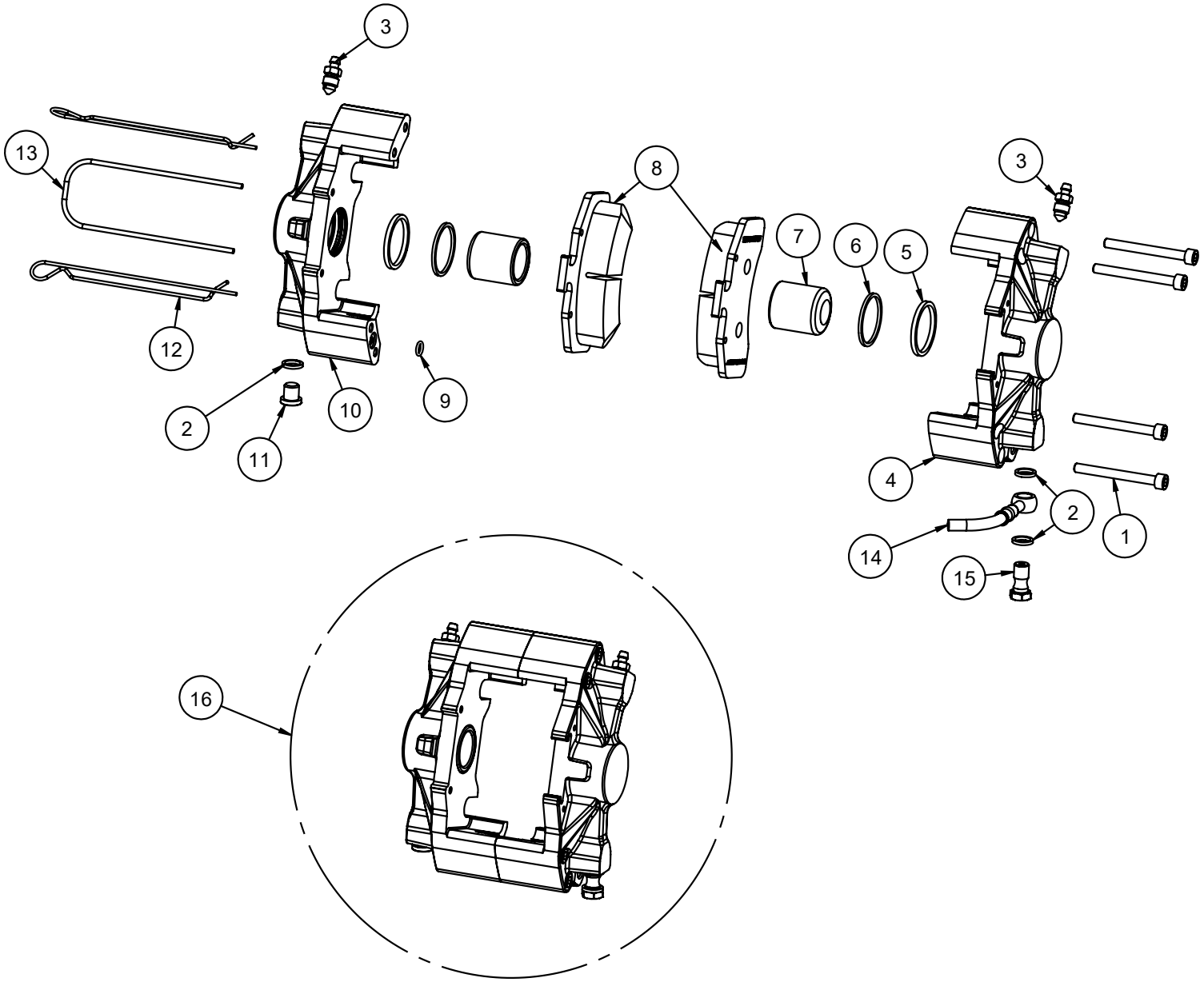

POS.	COD.	DESCRIZIONE	*DESCRIPTION*
1	TCI.06X065	VITE M 6X 65 CILINDRICA 5931	*M 6X 65 SOCKET HEAD SCREW*
2	AFN.00186	RONDELLA 10,5-14X2 RAME	*COPPER WASHER 10,5-14X2*
2'	AFN.05870	RONDELLA 10 -16X2 RAME	*COPPER WASHER 10 -16X2*
3	SZ0.00184	SPURGO M10 V09/10	*BLEEDER M10*
4	SDN.3900S	SEMI PINZA POSTERIORE SX	*RENT REAR BRAKE CALIPER LH*
5	AFS.01051	GOMMINO PINZA POSTERIORE Ø32 V05/V08	*REAR BRAKE CALIPER SEAL Ø32*
6	AFS.01681	GOMMINO PARAPOLVERE Ø32 V05/V08	*DUST GUARD SEAL Ø32*
7	SD1.03816	PISTONCINO PINZA CRG RENT Ø32	*BRAKE CALIPER CRG RENT PISTON*
8	AFS.03744	PASTIGLIA FRENO CRG RENT 2 (X PINZA Ø32) (1PC, 2PCS FOR A KIT)	*BRAKE PAD RENT 2* (1PC, 2PCS FOR A KIT)
9	AFN.00182	OR PINZA 6 X 2 V09/10 POSTERIORE	*REAR O-RING CALIPER 6X2 V09/V10*
10	SDN.3900D	SEMI PINZA POSTERIORE DX	*RENT REAR BRAKE CALIPER RH*
11	SBN.00369	TAPPO M10 V09/10	*CALIPER CAP M10 V09/V10*
12	SZ0.03776	SPINA SICUREZZA PINZA RENT POST.	*REAR PIN SAFETY CRG RENT*
13	SZ0.03775	SPINA BLOCCA PASTIGLIA PINZA RENT POST.	*BRAKE PAD BLOCK PIN RENT*
14	AFS.03097	TUBO FRENO OCCHIELLO MM1570 ROSSO CENT/CENTMINI	*BRAKE TUBE EYELET MM1570*
15	SZ0.00185	RACCORDO M10 V09/10	*FITTING M10*
16	FM0.03900	PINZA POSTERIORE CRG RENT Ø32 COMPLETA	*REAR BRAKE CRG RENT CALIPER Ø32 COMPL.*

ASSALE – REAR AXLE

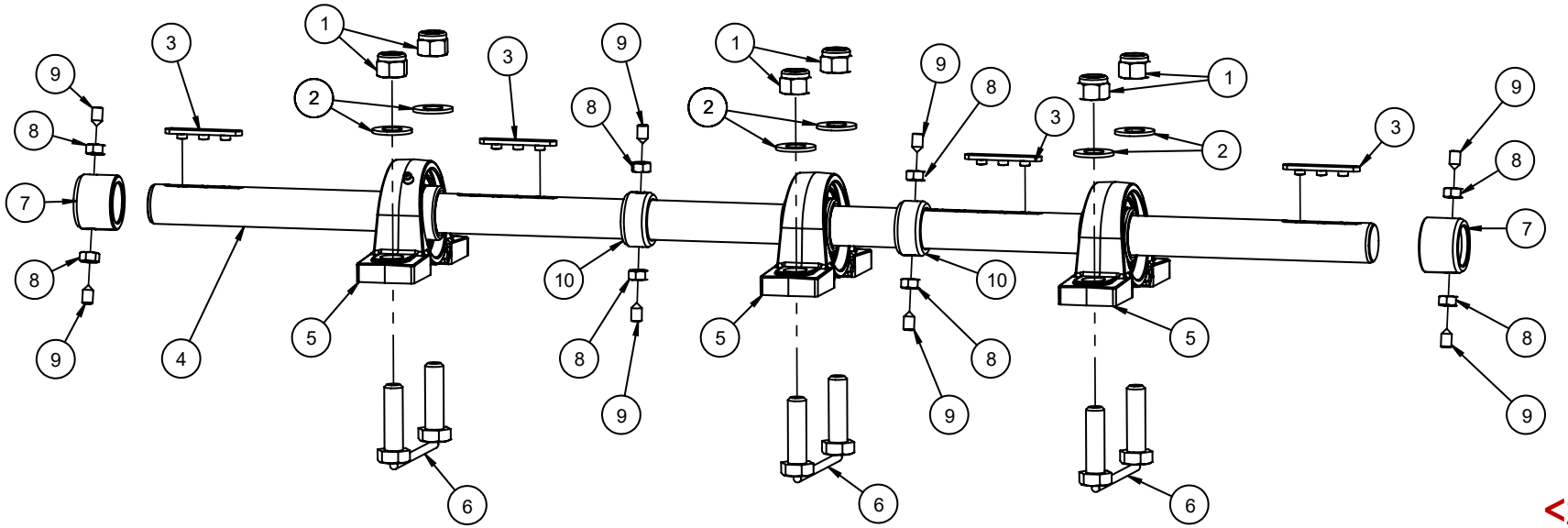

<2025

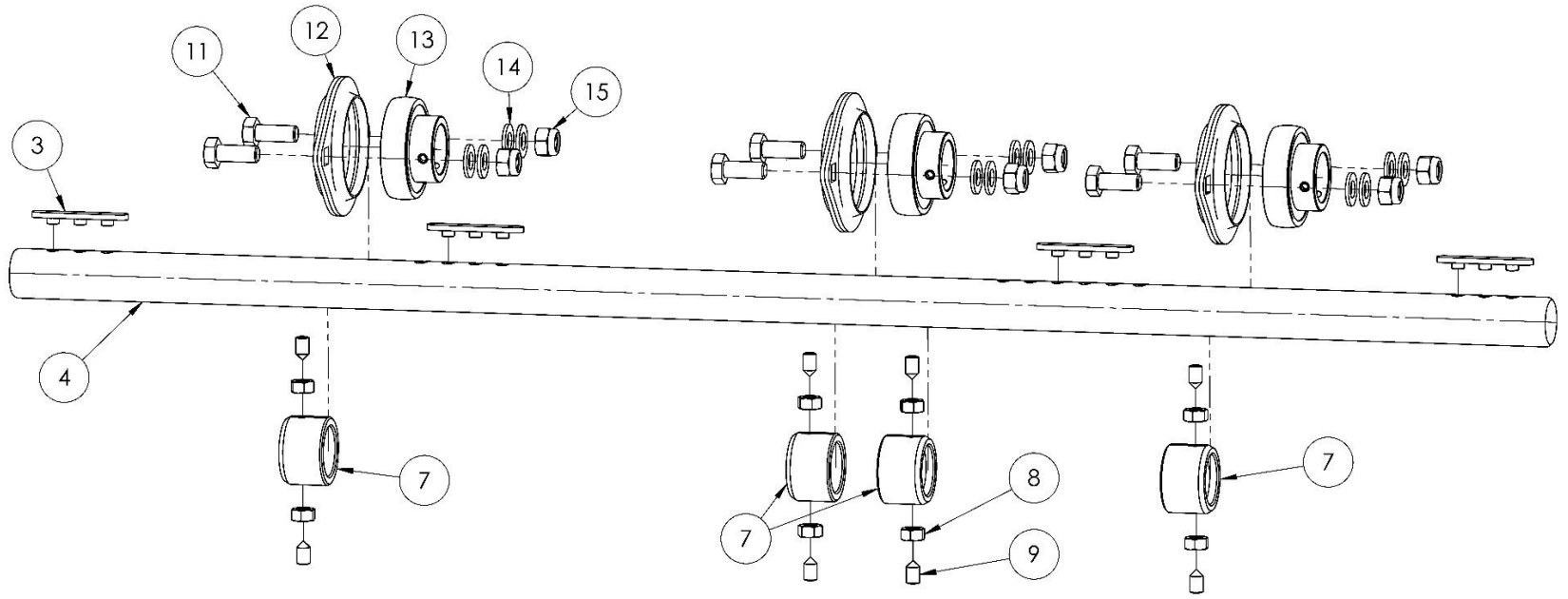

>2025

POS.	COD.	DESCRIZIONE	*DESCRIPTION*
1	AFN.02682	DADO M14 AUTOBLOCK ALTO	*M14 TALL SELFLOCKING NUT*
2	AFN.01564	RONDELLA 15X30X2,5	*WASHER 15-30X2,5*
3	AFS.0024701	CHIAVETTA ASSALE 3 PIOLI BRUNITA	*REAR AXLE KEYWAY 3 PINS*
4	FZ0.02216H	ASSALE 30 H BIANCO CENTURION	*REAR AXLE 30 HARD WHITE CENT*
5	AFS.02122	CUSCINETTO ASSALE 30 CENTURION GRANO M8	*REAR AXLE BEARING 30 CENT GRUB M8*
6	SZ0.02368	COPPIA VITI CUSC. ASSALE CENT 14X45	*AXLE BEARING COUPLE OF SCREWS CENT*
7	SZ0.02519	BOCCOLA CENTURION FISSAGGIO ASSALE	*REAR AXLE CLAMP BUSHING CENT*
8	AFN.0049D	DADO M 8 DX	*NUT M8*
9	AFN.05529	GRANO M 8X14 TESTA A PUNTA	*M8X14 GRUB SCREW*
10	SZ0.02519	BOCCOLA CENTURION FISSAGGIO ASSALE	*REAR AXLE CLAMP BUSHING CENT*
11	AFN.02844	VITE M10X 25 CILINDRICA 5931	*M10X25 SOCKET HEAD SCREW*
12	AFN.06822	COPPIA FLANGE X CUSCINETTO ASSALE 30 2F CENT	*AXLE BEARING FLANGE PAIR CENT 2.0*
13	AFS.06695	CUSCINETTO ASSALE 30 CE UC206 GRANO M8	*AXLE BEARING 30 CE UC206 GRUB SCREW M8*
14	AFN.01637	RONDELLA 10,5-20X2	*WASHER 10,5-20X2*
15	AFN.02393	DADO M10 AUTOBLOCK ALTO	*NUT M10 HIGH SELF-LOCKING*

CARENA POSTERIORE – REAR FAIRING

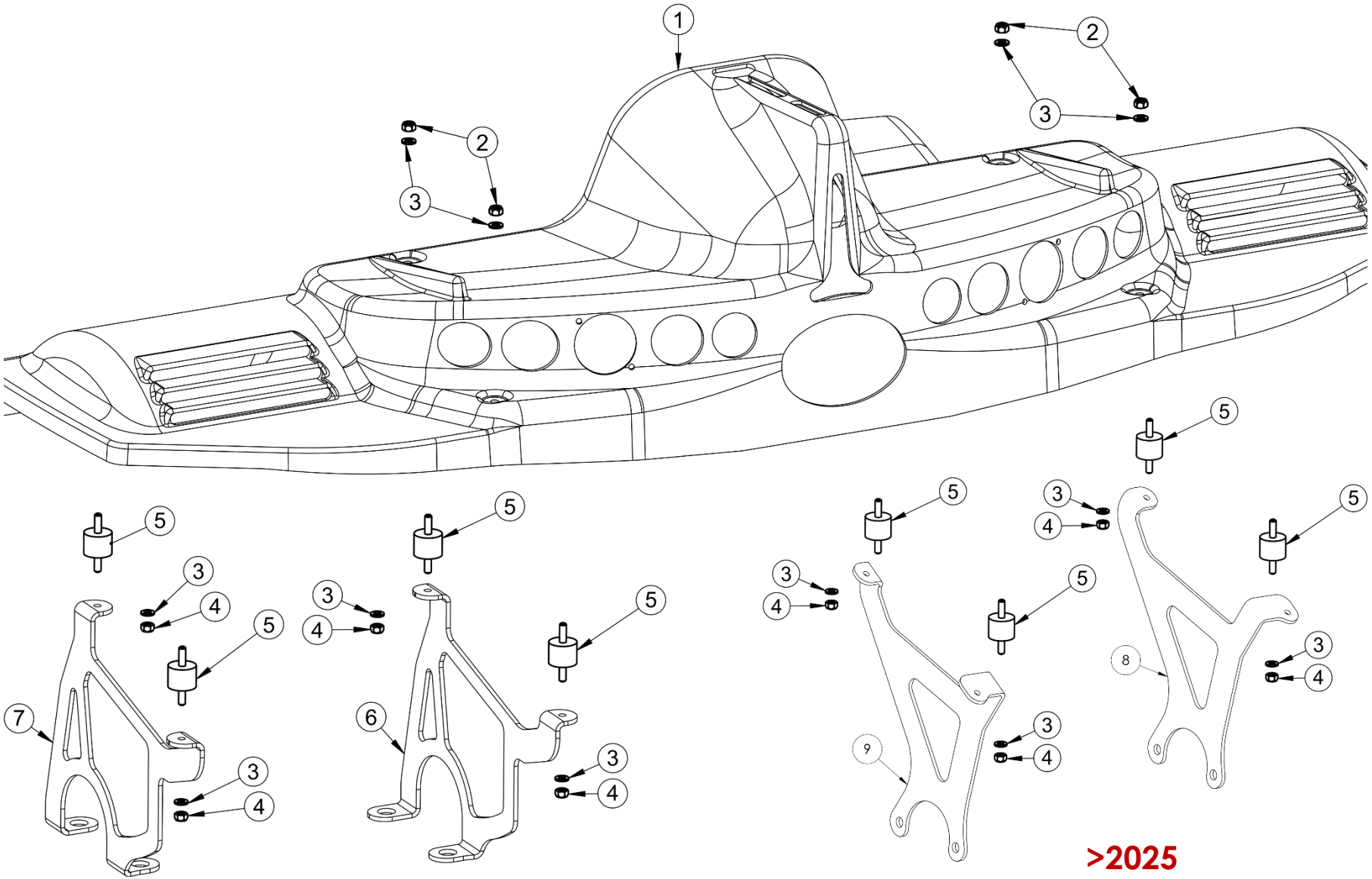

POS.	COD.	DESCRIZIONE	*DESCRIPTION*
1	AFS.0217015	CARENA POSTERIORE CENTURION	*REAR FAIRING CENT*
2	SBN.02376	DADO M 6 CIECO ZINCATO CENT	*BLIND NUT M 6 BLACK CENT*
3	AFN.00263	RONDELLA 6,5-18X1,6	*WASHER 6,5-18X1,6*
4	AFN.00106	DADO M 6 AUTOBLOCK BASSO	*NUT M6 LOW SELF-LOCKING*
5	AFS.02296	SILENTBLOCK M+M M 6 Ø25X20 CENTURION	*SILENTBLOCK M+M M 6 25X20 CENT*
6	SZ0.2249D	SUPPORTO CARENA POSTERIORE DX CENTURION	*REAR FAIRING SUPPORT RH CENTURION*
7	SZ0.2249S	SUPPORTO CARENA POSTERIORE SX CENTURION	*REAR FAIRING SUPPORT LF CENTURION*
8	SZ0.6547D	SUPPORTO CARENA POSTERIORE CENT 2.0 DX	*REAR FAIRING SUPPORT RH CENT 2.0*
9	SZ0.6547S	SUPPORTO CARENA POSTERIORE CENT 2.0 SX	*REAR FAIRING SUPPORT LH CENT 2.0*

LUCI STOP – REAR STOP LIGHT

UP TO FEB-2024

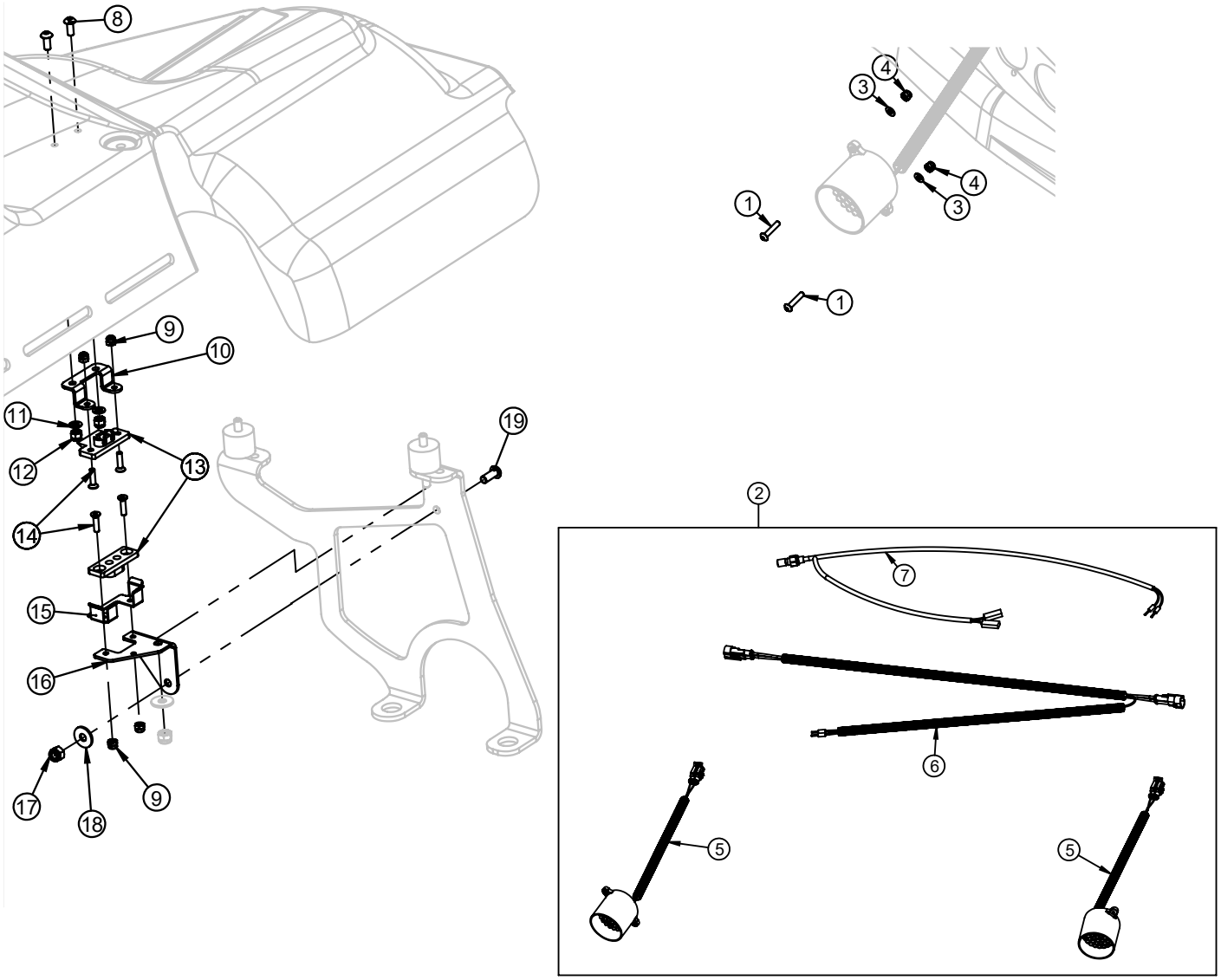

FROM FEB-2024

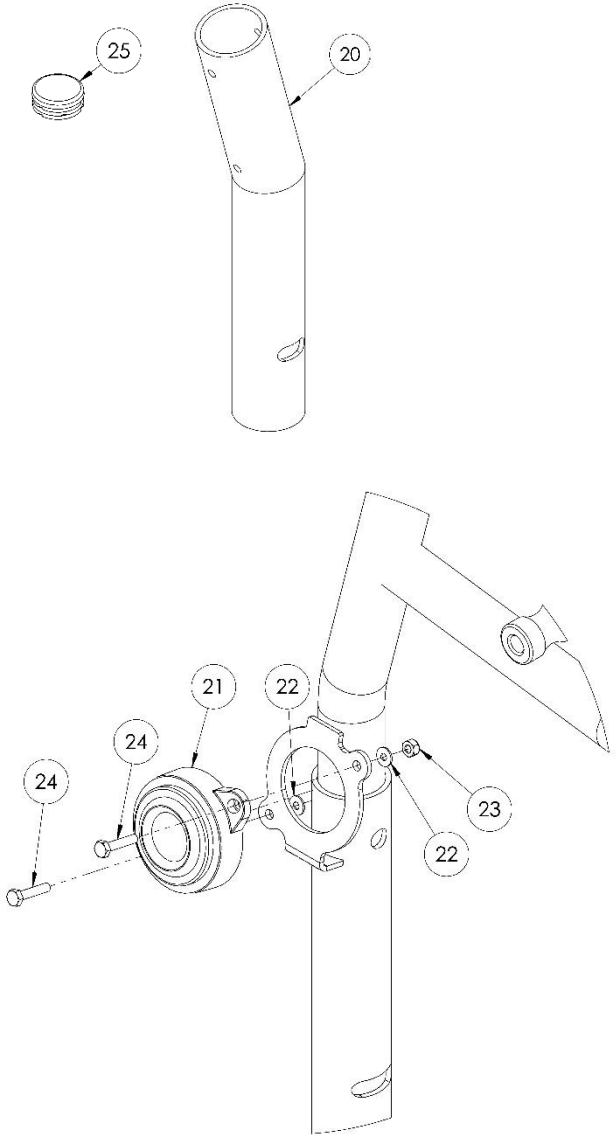

POS.	COD.	DESCRIZIONE	*DESCRIPTION*
1	AFN.02543	VITE M 4X 20 BOMBATA 7380 ZINCATA	*M4X20 CONVEX HEAD SCREW*
2	FM0.04001	CABLAGGIO COMPLETO LUCI STOP CENT CON INTERR.	*CABEL SYS.COMPLETE STOP LIGHT CENT*
3	AFN.02445	RONDELLA 4,5-12X1,5	*WASHER 4,5-12X1,5*
4	AFN.02544	DADO M 4 AUTOBLOCK BASSO	*M4 HIGH SELF-LOCKING NUT*
5	FL1.02518	LUCE STOP POST. TONDA CENT CABLATA	*CENTURION REAR STOP LIGHT ROUND*
6	FL1.04001	CABLAGGIO LUCI STOP CENT MOD. CON INTERRUTTORE	*CABEL SYSTEM STOP LIGHT CENT FOR SYSTEM WITH SWITCH*
7	FL1.04002	CABLAGGIO RACCORDO IDROSTOP CENT MOD. CON INTER.	*CENTURION IDRO STOP FITTING MODEL WITH SWITCH*
8	AFN.00359	VITE M 5X 12 BOMBATA 7380	*M 5X12 CONVEX HEAD SCREW*
9	AFN.00701	DADO M 4 AUTOBLOCK ALTO	*M4 HIGH SELF-LOCKING NUT*
10	SZ0.03808	SUPPORTO PIASTRA INTERRUTTORE STOP CENT	*CENTURION STOP PLATE SUPPORT*
11	AFN.02264	RONDELLA 5,3-10X1	*WASHER 5,3-10X1*
12	AFN.00360	DADO M 5 AUTOBLOCK BASSO	*NUT M 5 LOW SELF-LOCKING*
13	AFS.03821	INTERRUTTORE LUCI STOP CENT	*REAR STOP LIGHT CONTACTOR*
14	TSV.04X016	VITE M 4X 16 SVASATA ZNT 5933	*M 4X 16 COUNTERSUNK HEAD SCREW*
15	SZ0.03811	GUIDA INTERRUTTORE STOP CENT	*RED LIGHT SWITCH PLATE SUPPORT HOLDER*
16	SZ0.03807	SUPPORTO CORPO INTERRUTTORE STOP CENT	*CENTURION STOP BODY SUPPORT*
17	AFN.00264	DADO M 6 AUTOBLOCK ALTO	*NUT M6 HIGH SELF-LOCKING*
18	AFN.00263	RONDELLA 6,5-18X1,6	*WASHER 6,5-18X1,6*
19	AFN.00502	VITE M 6X 16 BOMBATA 7380	*M 6X16 CONVEX HEAD SCREW*
20	SC0.06484	TUBO SUPPORTO FANALINO POSTERIORE CENT 2.0	*CENT 2.0 REAR LIGHT SUPPORT TUBE*
21	AFS.06483	LUCE STOP POSTERIORE CENT 2.0	*REAR STOP LIGHT CENT 2.0*
22	AFN.02445	RONDELLA 4,5-12X1,5	*WASHER 4,5-12X1,5*
23	AFN.00701	DADO M 4 AUTOBLOCK ALTO	*M4 HIGH SELF-LOCKING NUT*
24	AFN.06554	VITE M 4X 55 CILINDRICA 5931	*M 4X 55 SOCKET HEAD SCREW*
25	AFS.06572	TAPPO TUBO Ø35 SUPP. LUCE STOP POST. CENT 2.0	*CENT. 2.0 LIGHT STOP MOUNTING CAP*

DISCO FRENO E MOZZO – BRAKE DISC AND HUB

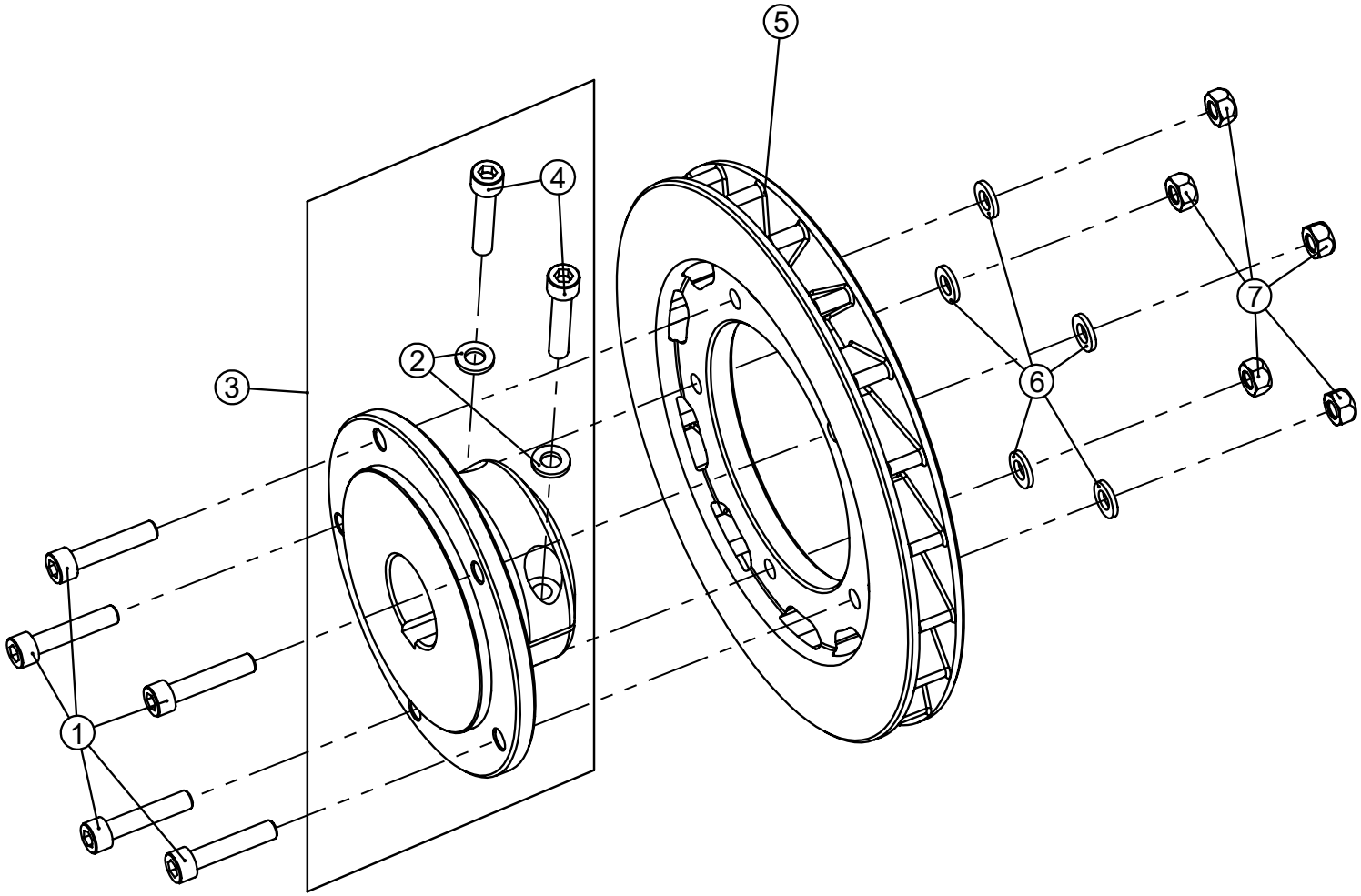

POS.	COD.	DESCRIZIONE	*DESCRIPTION*
1	AFN.00478	VITE M 6X 25 CILINDRICA 5931	*M 6X25 SOCKET HEAD SCREW*
2	AFN.06156	RONDELLA 6,5-10X1 ACCIAIO INOX	*BRASS WASHER 6,5-10X1 INOX*
3	FM0.02344	MOZZO DISCO POSTERIORE AL 30 CENT COMPLETO	*REAR BRAKE DISC HUB 30 COMPLETE CENT*
4	AFN.02154	VITE M 6X 35 CILINDRICA 12.9 5931	*M 6X35 SOCKET HEAD SCREW 12.9*
5	SL2.02345	DISCO FRENO POSTERIORE CENT	*BRAKE DISC CTM*
6	AFN.00105	RONDELLA 6,5-12X1,5	*WASHER 6,5-12X1,5*
7	AFN.00234	DADO M 6 METALBLOCK	*NUT M 6 METALBLOCK*

SALVA DISCO – DISC PROTECTOR

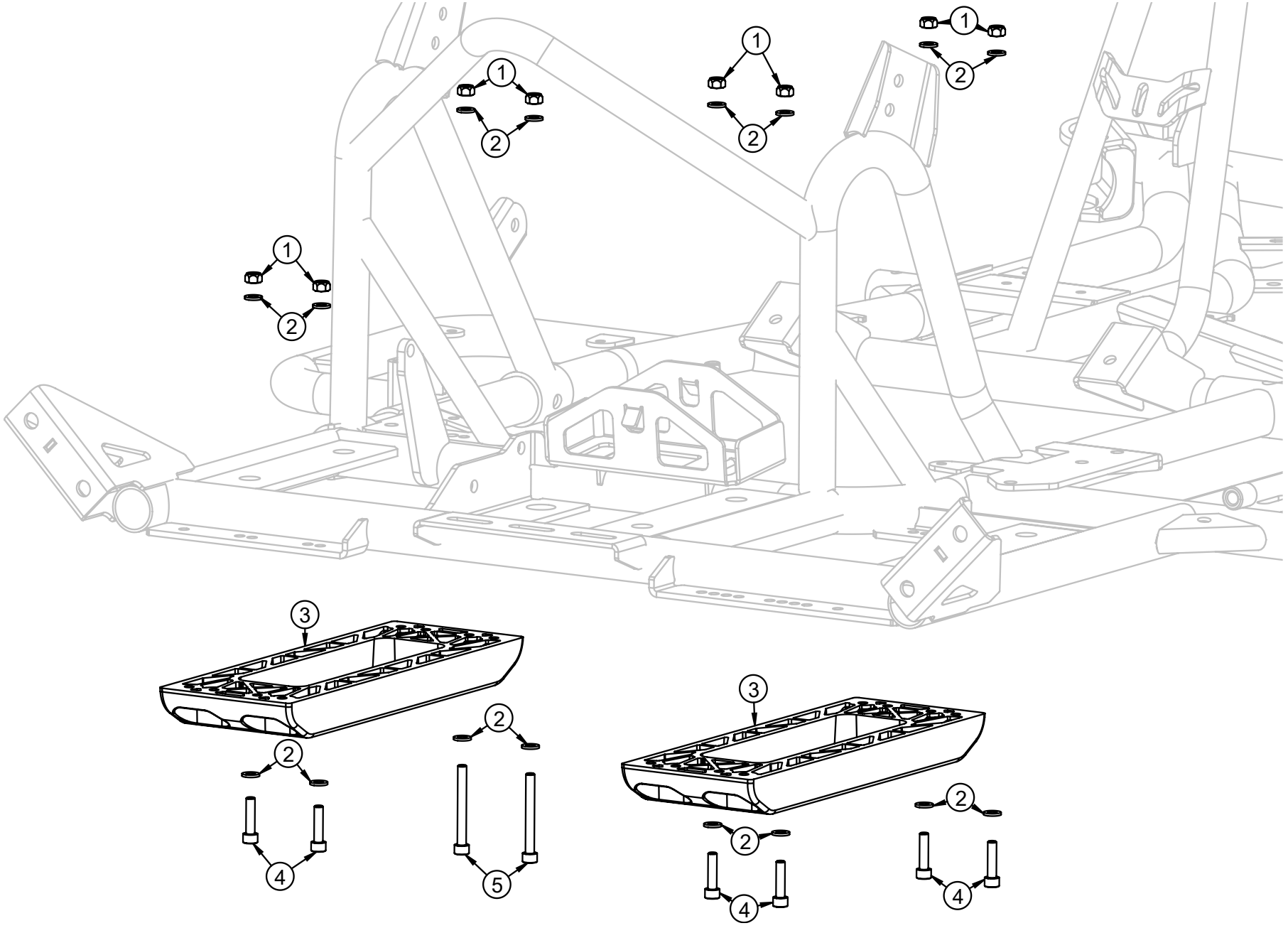

POS.	COD.	DESCRIZIONE	*DESCRIPTION*
1	AFN.00106	DADO M 6 AUTOBLOCK BASSO	*NUT M6 LOW SELF-LOCKING*
2	AFN.00263	RONDELLA 6,5-18X1,6	*WASHER 6,5-18X1,6*
3	AFS.03419	PARADISCO PARAPULEGGIA CENT STAMPATO	*CENTURION DISC AND PULLEY PLATE*
4	AFN.00478	VITE M 6X 25 CILINDRICA 5931	*M 6X25 SOCKET HEAD SCREW*
5	AFN.00594	VITE M 6X 60 CILINDRICA 5931	*M 6X 60 SOCKET HEAD SCREW*

PIANALE – FLOOR TRAY

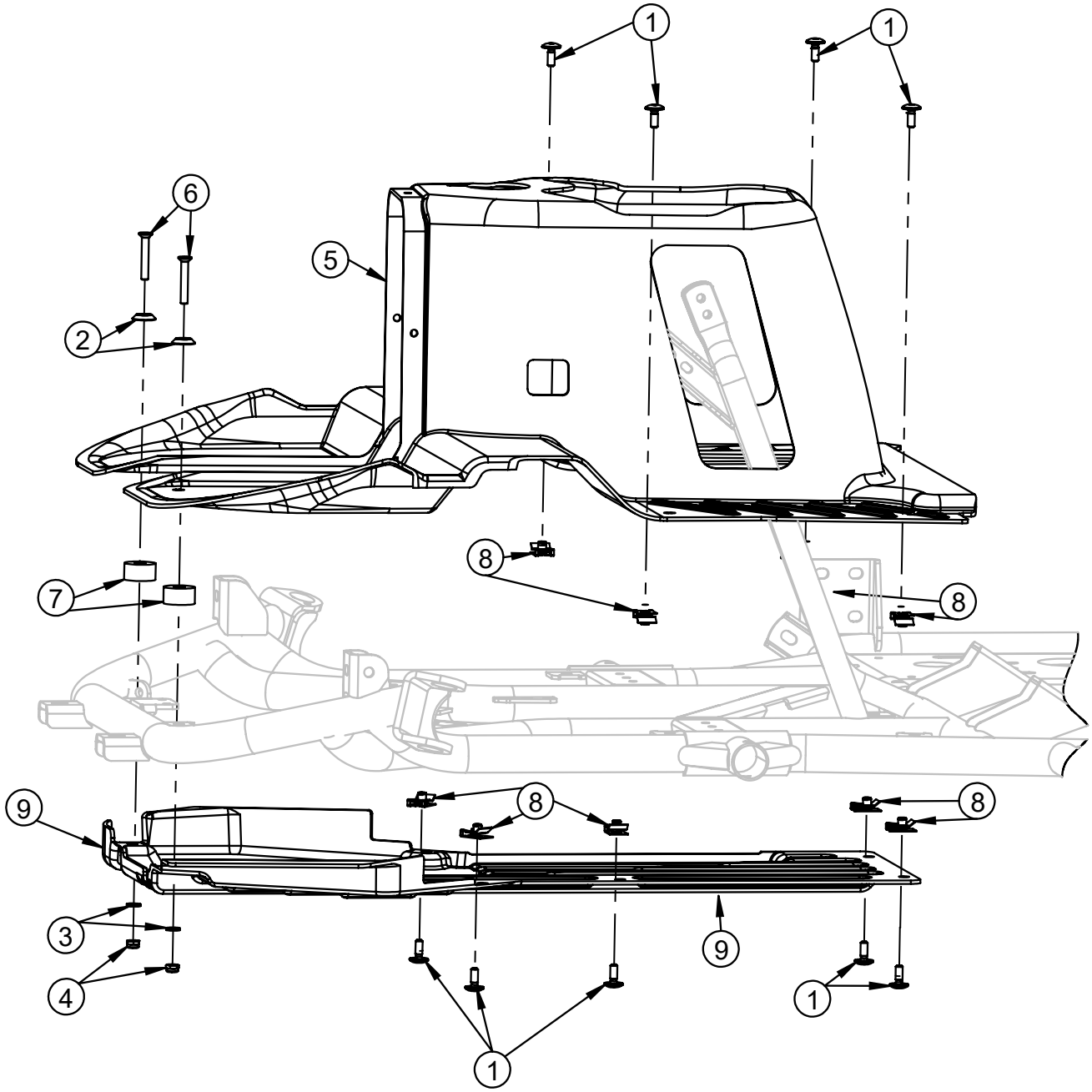

POS.	COD.	DESCRIZIONE	*DESCRIPTION*
1	AFS.00261	VITE TESTA TONDA LARGA M 6X 16 PIANALE	*FLOOR TRAY SCREW LARGE ROUND HEAD M6X16*
2	SAN.00249	RONDELLA 6 SVASATA NERA	*WASHER 6 COUNTERSUNK BLACK*
3	AFN.00263	RONDELLA 6,5-18X1,6	*WASHER 6,5-18X1,6*
4	AFN.00106	DADO M 6 AUTOBLOCK BASSO	*NUT M6 LOW SELF-LOCKING*
5	AFS.04032	PIANALE CENTURION PER SEDILE REGOLABILE	*FLOOR TRAY CENT FOR ADJUSTABLE SEAT*
6	TSV.06X040	VITE M 6X 40 SVASATA 5933	*M 6X 40 COUNTERSUNK HEAD SCREW*
7	AFS.04662	SPESSORE SEDILE 10-27X14 IN NYLON	*SEAT LINING 10-27X14 NYLON*
8	AFS.02327	CLIPS PRESTOLA M6 CENTURION	*CENTURION CLIPS M6 FOR FITTING*
9	AFS.02745	CARTER PROTEZIONE CARRELLO PEDALE CENT	*CENT FOOTREST PROTECTION FAIRING*

INTERNO PIANALE – INTERNAL FLOOR TRAY

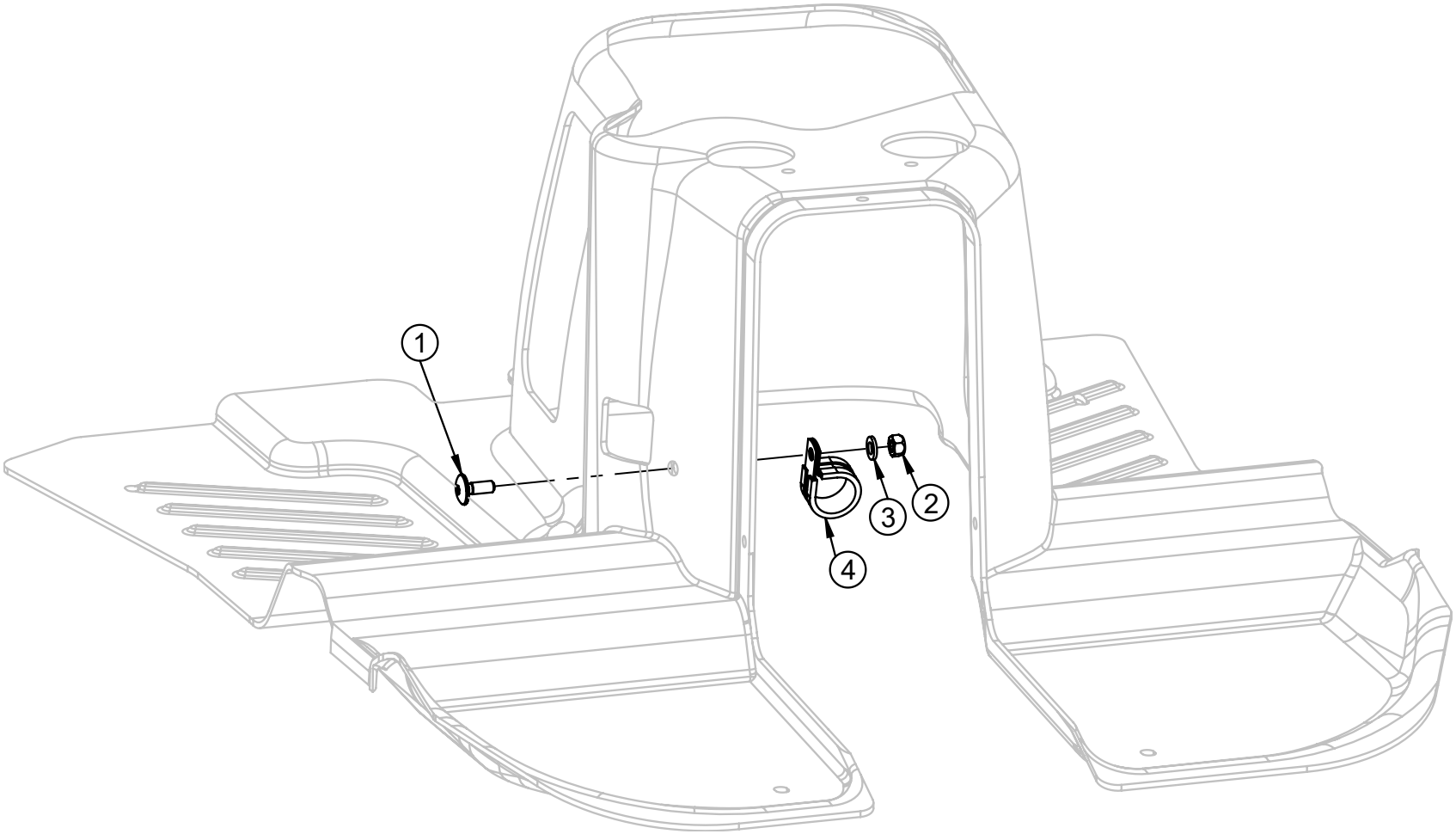

POS.	COD.	DESCRIZIONE	*DESCRIPTION*
1	AFS.00261	VITE TESTA TONDA LARGA M 6X 16 PIANALE	*FLOOR TRAY SCREW LARGE ROUND HEAD M6X16*
2	AFN.00106	DADO M 6 AUTOBLOCK BASSO	*NUT M6 LOW SELF-LOCKING*
3	AFN.00105	RONDELLA 6,5-12X1,5	*WASHER 6,5-12X1,5*
4	AFS.02948	FASCETTA FERMA TUBO 18 CENT	*18 HOSE CLAMP*

SERBATOIO OLIO FRENI – BRAKE OIL RECOVERY TANK

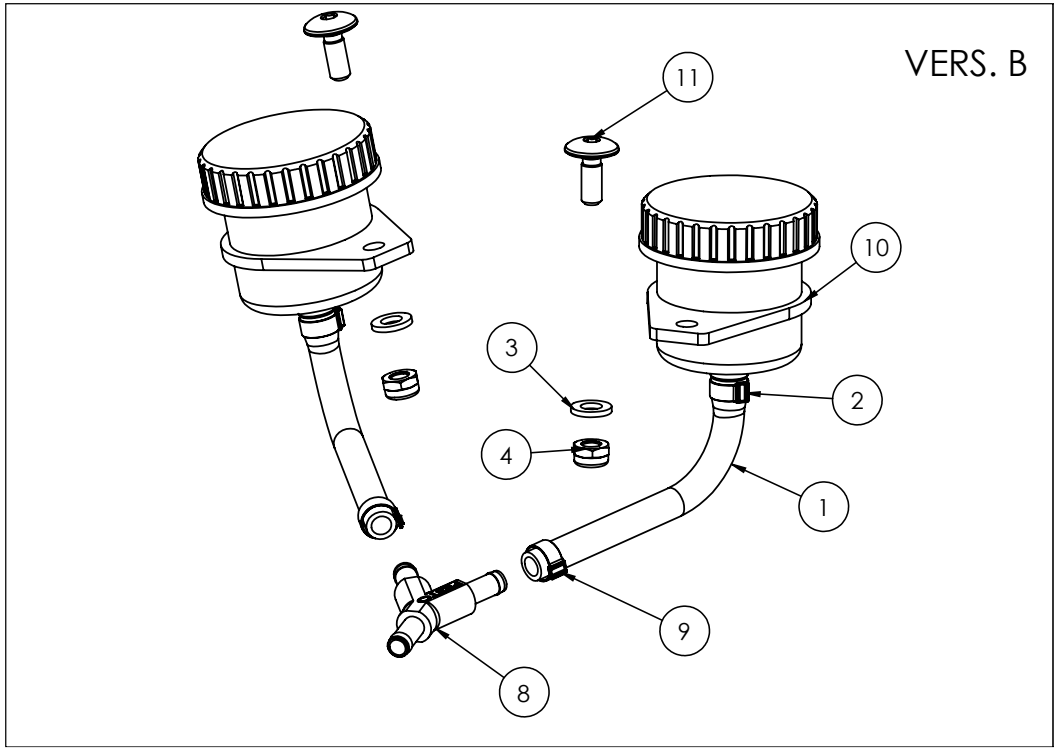

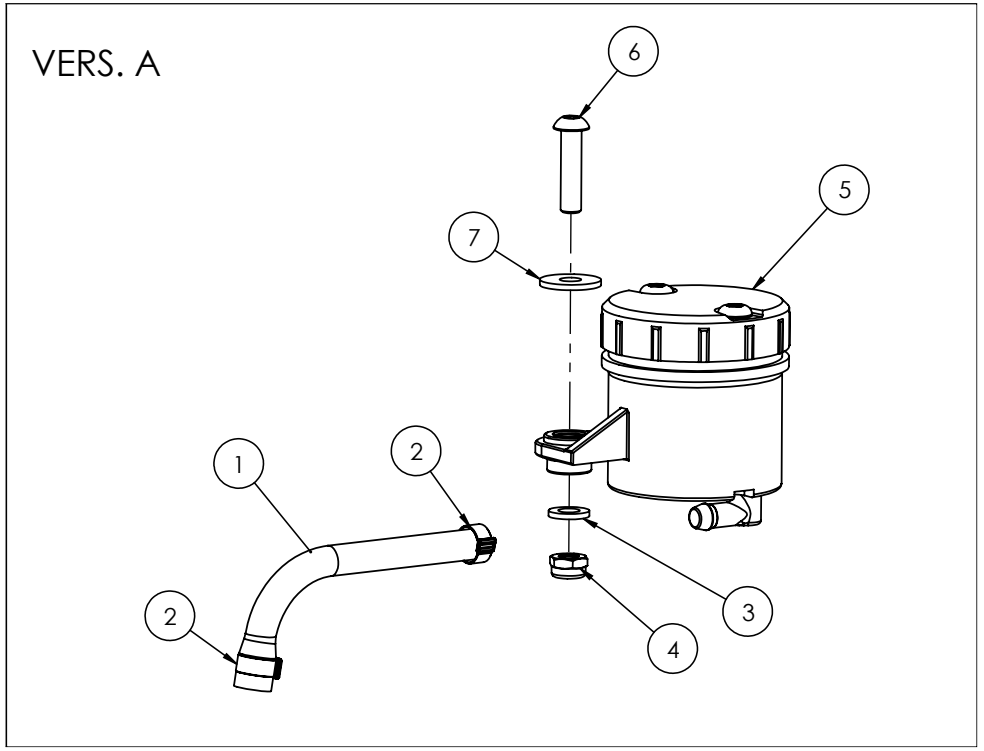

POS.	COD.	DESCRIZIONE	*DESCRIPTION*
1	AMS.00139	TUBO BENZINA AL METRO	*FUEL PIPE PER METER*
2	AFN.02937	FASCETTA ACCIAIO 7-11 TUBO CENTURION	*STEEL BAND 7-11 CENT*
3	AFN.00105	RONDELLA 6,5-12X1,5	*WASHER 6,5-12X1,5*
4	AFN.00106	DADO M 6 AUTOBLOCK BASSO	*NUT M6 LOW SELF-LOCKING*
5	AFS.05309	SERBATOIO OLIO FRENI C/TAPPO CENTURION 45CC	*CENTURION BRAKE FLUID TANK WITH CAP*
6	AFN.01917	VITE M 6X 25 BOMBATA 7380	*M 6X 25 CONVEX HEAD SCREW*
7	AFN.00263	RONDELLA 6,5-18X1,6	*WASHER 6,5-18X1,6*
8	AFS.01981	RACCORDO Y FESTO 6MM	*Y-FITTING FESTO 6MM*
9	AFS.02309	FASCETTA TUBAZIONE TANICA 9-11 A CRIMPARE	*FUEL TANK PIPE BAND*
10	AFS.02325	SERBATOIO OLIO FRENI C/TAPPO CENTURION	*RECOVERY TANK W/CAP CENT*
11	AFS.00261	VITE TESTA TONDA LARGA M 6X 16 PIANALE	*FLOOR TRAY SCREW LARGE ROUND HEAD M6X16*

SEDILE – SEAT

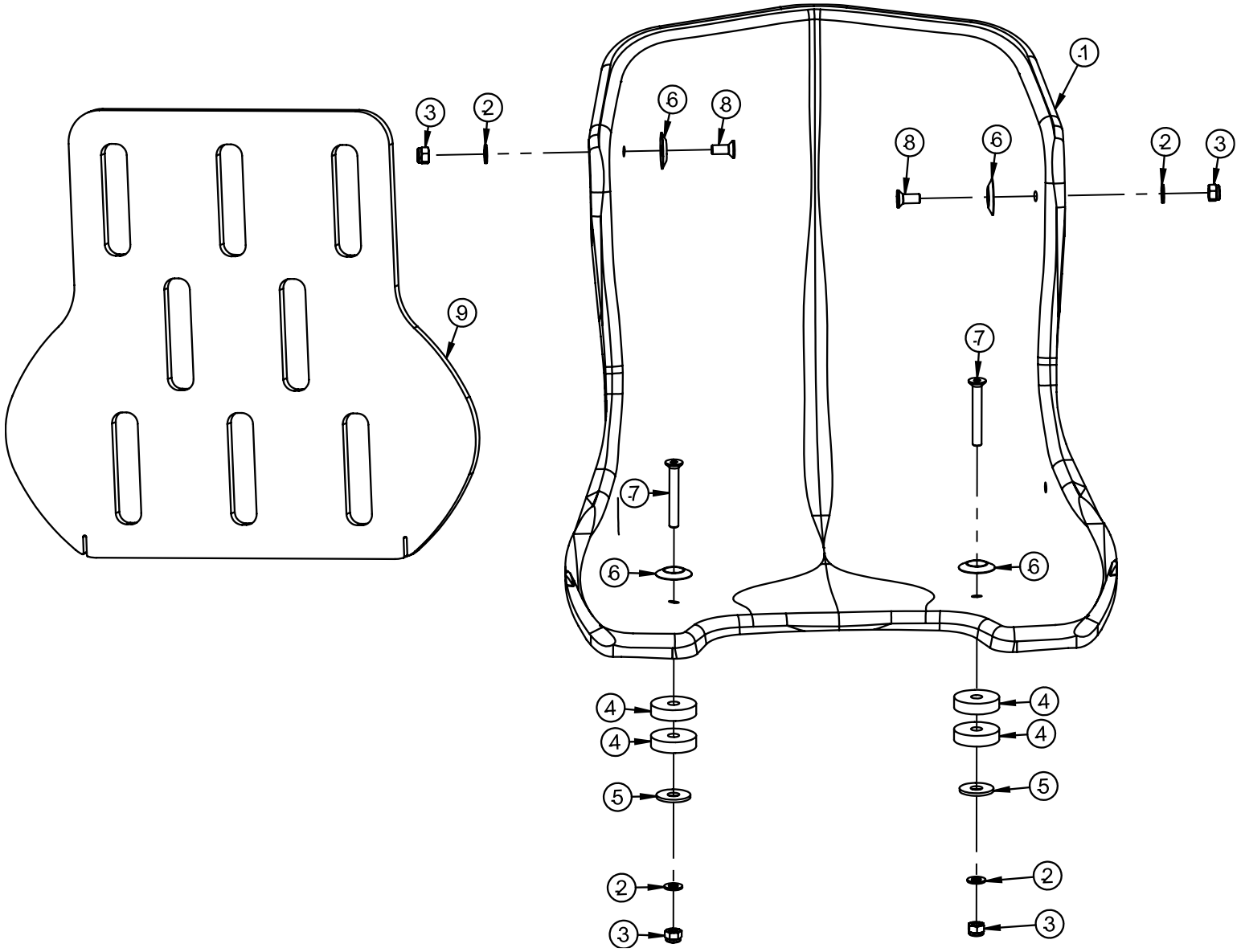

POS.	COD.	DESCRIZIONE	DESCRIPTION
1	AFS.02867	SEDILE IN PLASTICA SP.7 CENTURION	*CENTURION SP 7MM PLASTIC SEAT*
2	AFN.00350	RONDELLA 8,5-16X1,5	*WASHER 8,5-16X1,5*
3	AFN.00128	DADO M 8 AUTOBLOCK ALTO	*NUT M8 HIGH SELF-LOCKING*
4	AFS.04662	SPESSORE SEDILE 10-27X14 IN NYLON	*SEAT LINING 10-27X14 NYLON*
5	AFN.00125	RONDELLA 10,5-30X2,5	*WASHER 10,5-30X2,5*
6	FAN.00260	RONDELLA 8 SEDILE ALL.NERA	*ALUMINUM SEAT WASHER BLACK 8*
7	AFN.00682	VITE M 8X 60 SVASATA 5933	*M 8X 60 COUNTERSUNK HEAD SCREW*
8	AFN.00290	VITE M 8X20 SVASATA 5933	*M8X20 COUNTERSUNK HEAD SCREW*
9	AFS.03659	SPUGNA SEDILE CENTRALE CENT	*CENTRURION CENTRAL SEAT SPONGE*

PIOMBO – LEAD BALLAST **LEGACY**

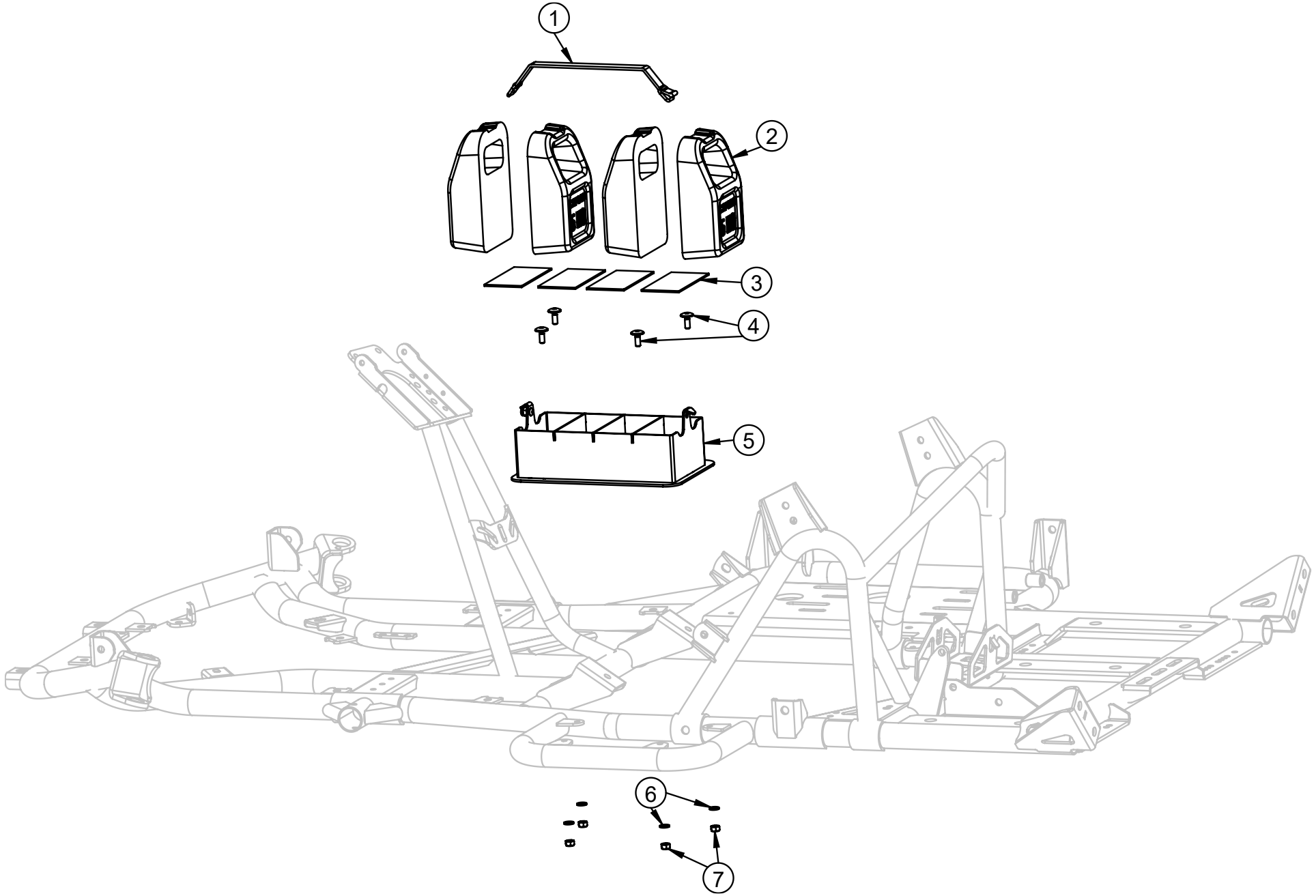

POS.	COD.	DESCRIZIONE	DESCRIPTION
1	AFS.01536	CINGHIA ELASTICA CIN-213 CENT (PORTA PIOMBO)	*BELT CIN-213 CENT*
2	FL1.02586	PIOMBO 5KG CENT	*5 KILOS LEAD CENT*
3	AFS.05218	ANTIVIBRANTE PIOMBO 48X98 CENTURION	*LEAD SILENTBLOCK 48X98 CENT*
4	AFS.00261	VITE TESTA TONDA LARGA M 6X 16 PIANALE	*FLOOR TRAY SCREW LARGE ROUND HEAD M6X16*
5	SZ0.02211	SUPPORTO PIOMBO CENTURION	*LEAD SUPPORT CENT*
6	AFN.00263	RONDELLA 6,5-18X1,6	*WASHER 6,5-18X1,6*
7	AFN.00264	DADO M 6 AUTOBLOCK ALTO	*NUT M6 HIGH SELF-LOCKING*
9	FK0.01723	KIT PIOMBO+ANTIVIBRANTE	*PLOMB+LEAD SILENTBLOCK ASSY*

SUPPORTO PIOMBO 2.0 – LEAD BALLAST HOUSING 2.0

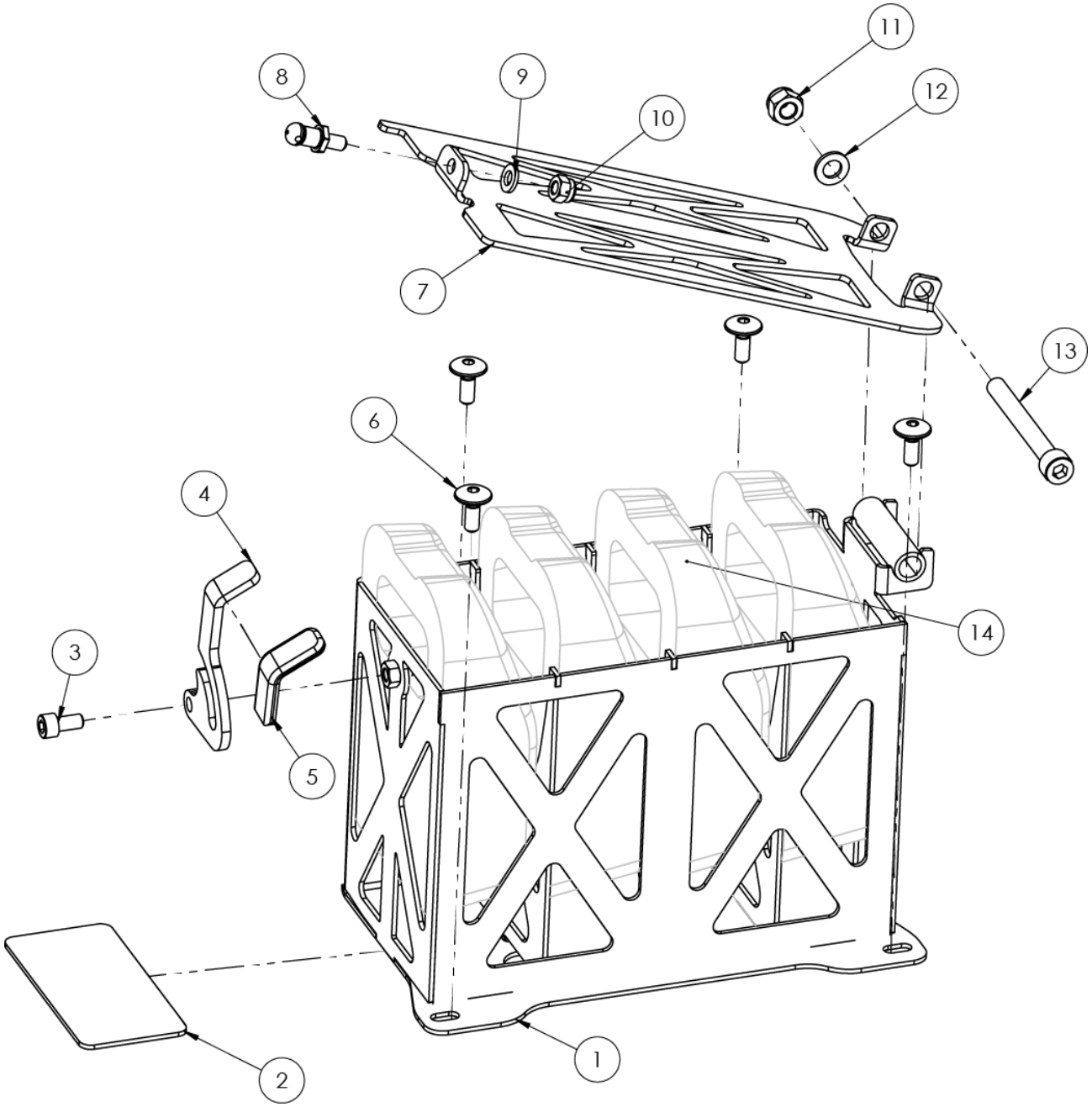

SUPPORTO PIOMBO 2.0 – LEAD BALLAST HOUSING 2.0

POS.	*COD.*	*DESCRIZIONE*	*DESCRIPTION*
1	SZE.06368	SUPPORTO PIOMBO CENTURION 2.0	*LEAD SUPPORT CENT 2.0*
2	AFS.05218	ANTIVIBRANTE PIOMBO 48X98 CENTURION	*LEAD SILENTBLOCK 48X98 CENT*
3	AFN.02921	VITE M 6X 12 CILINDRICA 5931	*M 6X 12 SOCKET HEAD SCREW*
4	SZ0.06320	MEZZALUNA FISSAGGIO PIOMBO CENT	*CENTURION HALFMOON CLAMPING LEAD BOX*
5	AFS.02222	CAPPUCCIO VINILE ROSSO CENT	*SILICON CAP RED CENT*
6	AFS.00261	VITE TESTA TONDA LARGA M 6X 16 PIANALE	*FLOOR TRAY SCREW LARGE ROUND HEAD M6X16*
7	FVO.06372	COPERCHIO PIOMBO CENT 2.0 NERO OPACO	*CENTURION LEAD BOX 2.0 COVER*
8	SBN.00103	PERNO SUPPORTO FRONTALINO INFERIORE	*FRONT FAIRING SUPPORT PIVOT BLACK*
9	AFN.00105	RONDELLA 6,5-12X1,5	*WASHER 6,5-12X1,5*
10	AFN.00264	DADO M 6 AUTOBLOCK ALTO	*NUT M6 HIGH SELF-LOCKING*
11	AFN.00128	DADO M 8 AUTOBLOCK ALTO	*NUT M8 HIGH SELF-LOCKING*
12	AFN.00287	RONDELLA 8,5-14X1,5	*WASHER 8,5-14X1,5*
13	AFN.01095	VITE M 8X 70 CILINDRICA 5931	*M8X70 SOCKET HEAD SCREW*
14	BF.PIOMBO2.0	PAG.PIOMBO CENT 2.0 (NO PIOMBI)	*LEAD BOX ASSY 2.0 (NO WEIGHTS)*
15	FK0.01723	KIT PIOMBO+ANTIVIBRANTE	*PLOMB+LEAD SILENTBLOCK ASSY*

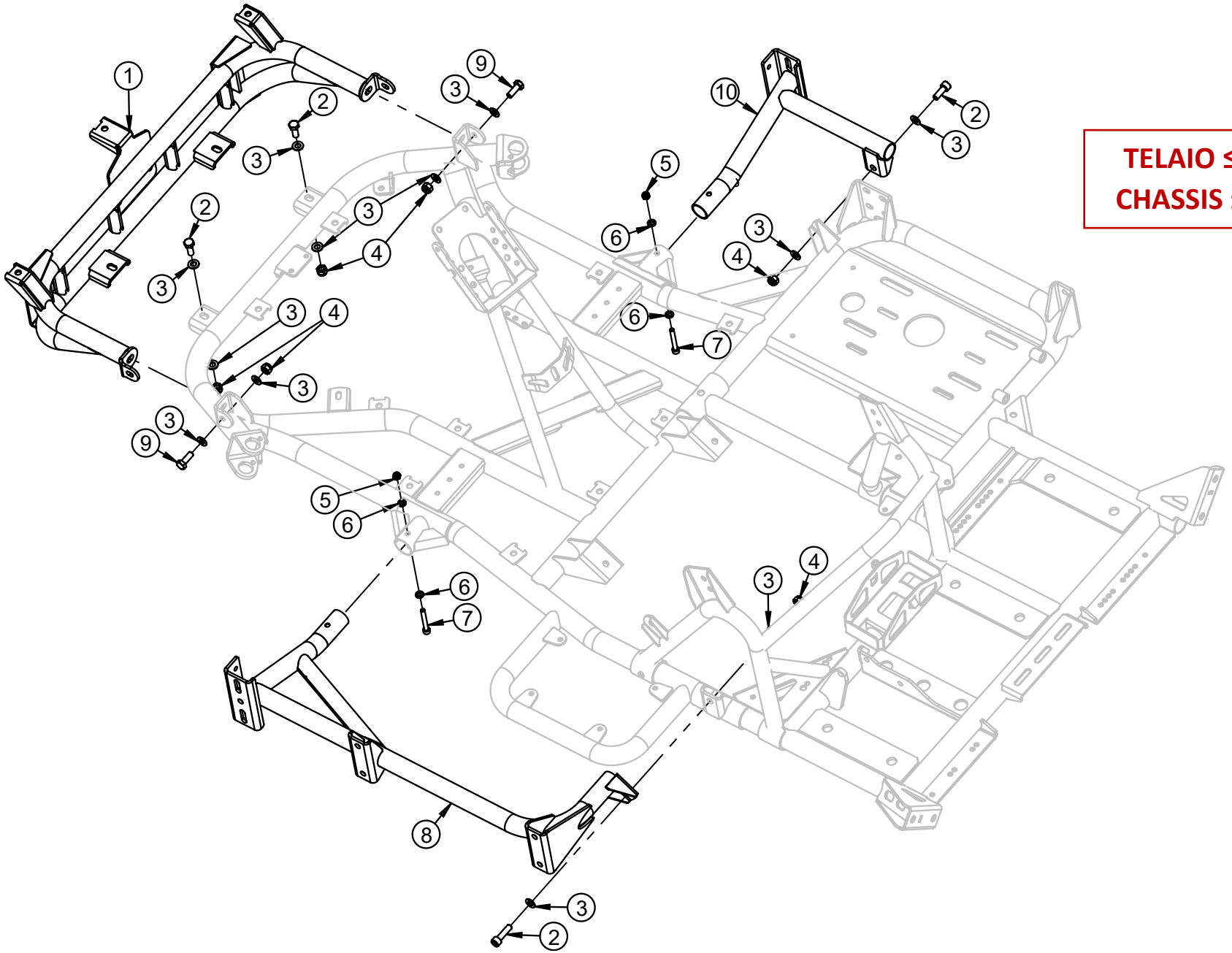

TELAIO ≤ 2025
CHASSIS ≤ 2025

POS.	*COD.*	*DESCRIZIONE*	*DESCRIPTION*
1	SZE.02078	PARAURTI ANTERIORE CENTURION	*FRONT BUMPER FRAME CENT*
2	AFN.00107	VITE M 8X 25 ESAGONALE 5739	*M 8X25 HEXAGONAL HEAD SCREW*
3	AFN.00129	RONDELLA 8,5-17X1,5	*WASHER 8,5-17X1,5*
4	AFN.00128	DADO M 8 AUTOBLOCK ALTO	*NUT M8 HIGH SELF-LOCKING*
5	AFN.00106	DADO M 6 AUTOBLOCK BASSO	*NUT M6 LOW SELF-LOCKING*
6	AFN.00105	RONDELLA 6,5-12X1,5	*WASHER 6,5-12X1,5*
7	AFN.00368	VITE M 6X 40 CILINDRICA 5931	*M 6X40 SOCKET HEAD SCREW*
8	SZE.0521S	PARAURTI LATERALE CENT 2013 SX	*SIDE BUMPER LH CENT*
9	AFN.00316	VITE M 8X 22 ESAGONALE 5739	*M 8X22 HEXAGONAL HEAD SCREW*
10	SZE.0521D	PARAURTI LATERALE CENT 2013 DX	*SIDE BUMPER RH CENT*

TELAIO ≥ 2026
CHASSIS ≥ 2026

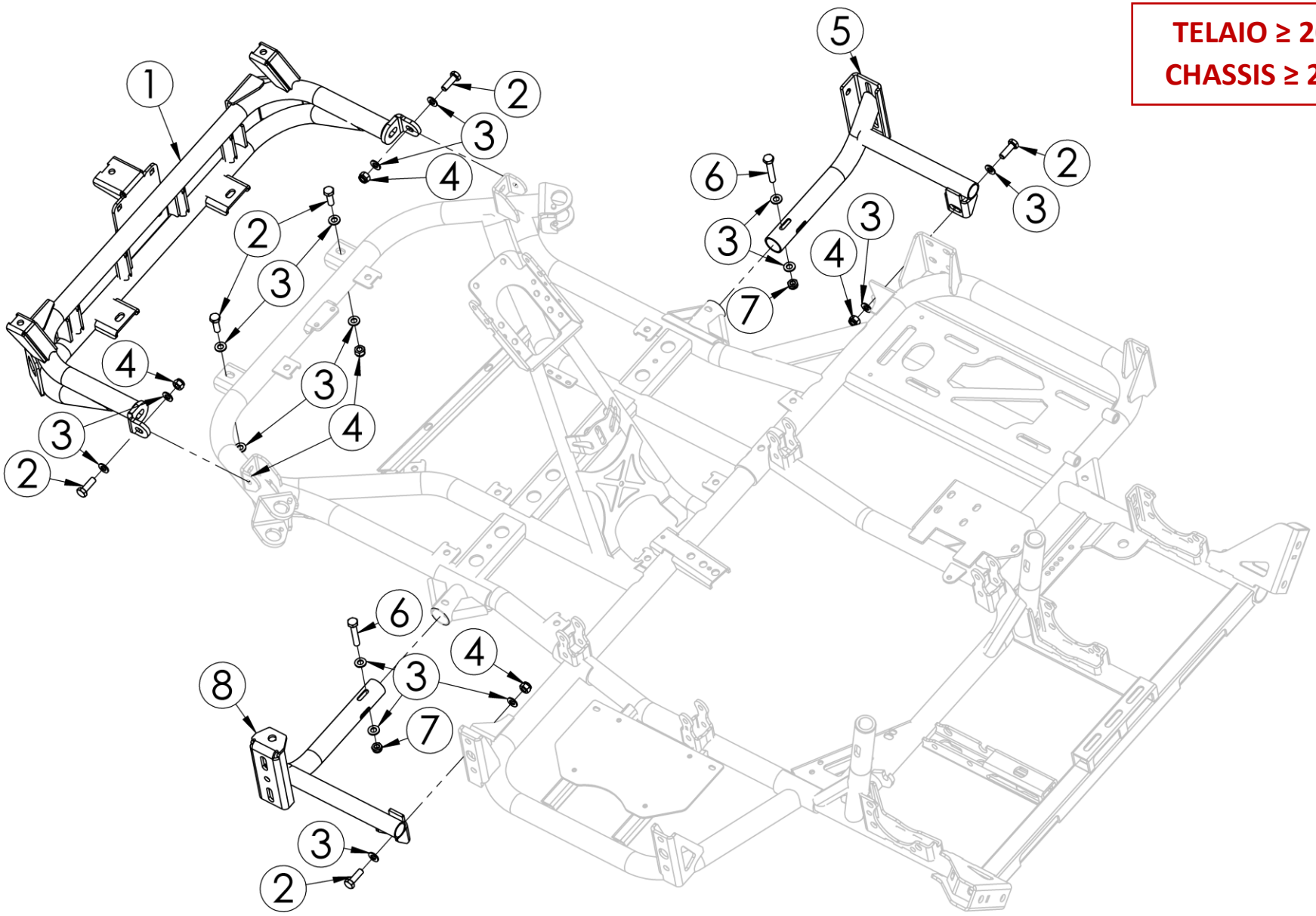

POS.	COD.	DESCRIZIONE	DESCRIPTION
1	SZE.02078	PARAURTI ANTERIORE CENTURION	FRONT BUMPER FRAME CENT
2	AFN.00107	VITE M 8X 25 ESAGONALE 5739	*M 8X25 HEXAGONAL HEAD SCREW*
3	AFN.00350	RONDELLA 8,5-16X1,5	*WASHER 8,5-16X1,5*
4	AFN.00128	DADO M 8 AUTOBLOCK ALTO	*NUT M8 HIGH SELF-LOCKING*
5	SZE.3368D	PARAURTI LATERALE CENT/CE DX	*CENT/CE RIGHT BUMPER FRAME*
6	AFN.00911	VITE M 8X 45 ESAGONALE 5739	*M 8X45 HEXAGONAL HEAD SCREW*
7	AFN.00160	DADO M 8 AUTOBLOCK BASSO	*NUT M8 LOW SELF-LOCKING*
8	SZE.3368S	PARAURTI LATERALE CENT/CE SX	*CENT/CE LEFTBUMPER FRAME*

PROTEZIONE ANTERIORE – FRONT BUFFER

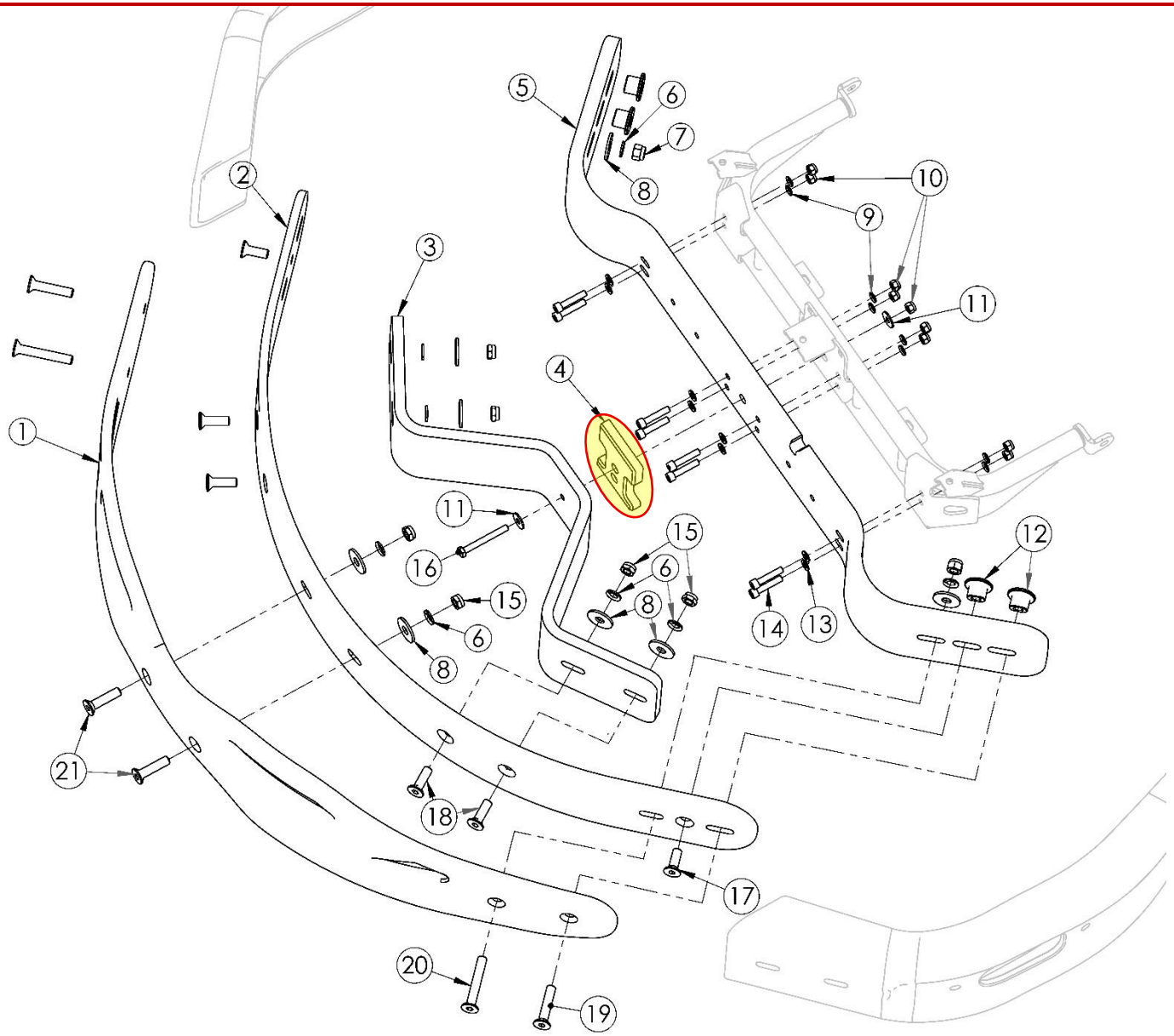

NR.4 ATTENTION!

SMALL SILENTBLOCK

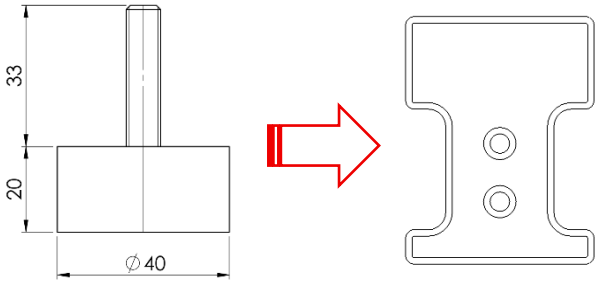

AFS.04894 replaced with AFS.06680

BIG SILENTBLOCK

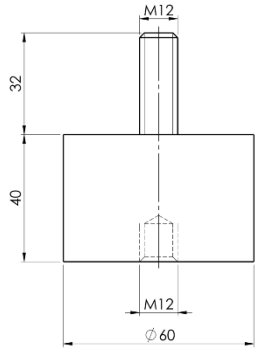

AFS.02509

POS.	COD.	DESCRIZIONE	DESCRIPTION
1	AFS.04911	FASCIA PARAURTI ANTERIORE CENT CON PROTEZ. PEDALI	*CENTURION FRONT BUFFER BAND WITH SIDE PROTECTION*
2	AFS.0216305	FASCIA PARACOLPI CENTRALE ANT.INT CENT	*INT.FRONT-CENTRAL BUFFER BAND CENT*
3	AFS.0315402	BALESTRA ANTERIORE CENTURION	*FRONT LEAF SPRING CENT*
4	AFS.06680	DISTANZIALE FISSAGGIO BALESTRA ANTERIORE CENT	*FRONT LEAF SPRING CLAMP SPACER CENT*
5	AFS.0216109	BALESTRA ANTERIORE CENTRALE CENTURION	*FRONT-CENTRAL LEAF SPRING CENT*
6	AFN.03734	RONDELLA ELASTICA SPACCATA GROWER M12	*M12 GROWER WASHER*
7	AFN.02364	DADO M12 AUTOBLOCK ALTO	*M12 HIGH SELF-LOCKING NUT*
8	SZ0.E1082	RONDELLA 10 -22X5 CE	*10X22X5 WASHER*
9	CE00108	RONDELLA ELASTICA SPACCATA GROWER M 8	*M8 GROWER WASHER*
10	AFN.00128	DADO M 8 AUTOBLOCK ALTO	*NUT M8 HIGH SELF-LOCKING*
11	AFN.02415	RONDELLA 8,5-24X2	*8,5-24X2 WASHER*
12	SZ0.00701	DADO M12 OVALE 14X25	*SPECIAL NUT M12 14X25*
13	AFN.00350	RONDELLA 8,5-16X1,5	*WASHER 8,5-16X1,5*
14	AFN.00132	VITE M 8X 40 CILINDRICA 5931	*M8X40 SOCKET HEAD SCREW*
15	AFN.02394	DADO M12 AUTOBLOCK BASSO	*M12 LOW SELF-LOCKING NUT*
16	AFN.00914	VITE M 8X 70 ESAGONALE 5739 TUTTO FILETTO	*M 8X70 HEXAGONAL HEAD SCREW*
17	AFN.03610	VITE M12X 35 SVASATA 5933	*M12X 35 COUNTERSUNK HEAD SCREW*
18	AFN.02293	VITE M12X 40 SVASATA 5933	*M12X40 COUNTERSUNK HEAD SCREW*
19	AFN.00676	VITE M12X 60 SVASATA 5933	*M12X60 COUNTERSUNK HEAD SCREW*
20	AFN.02373	VITE M12X 80 SVASATA 5933	*M12X80 COUNTERSUNK HEAD SCREW*
21	AFN.02294	VITE M12X 50 SVASATA 5933	*M12X50 COUNTERSUNK HEAD SCREW*

PROTEZIONE POSTERIORE – REAR BUFFER

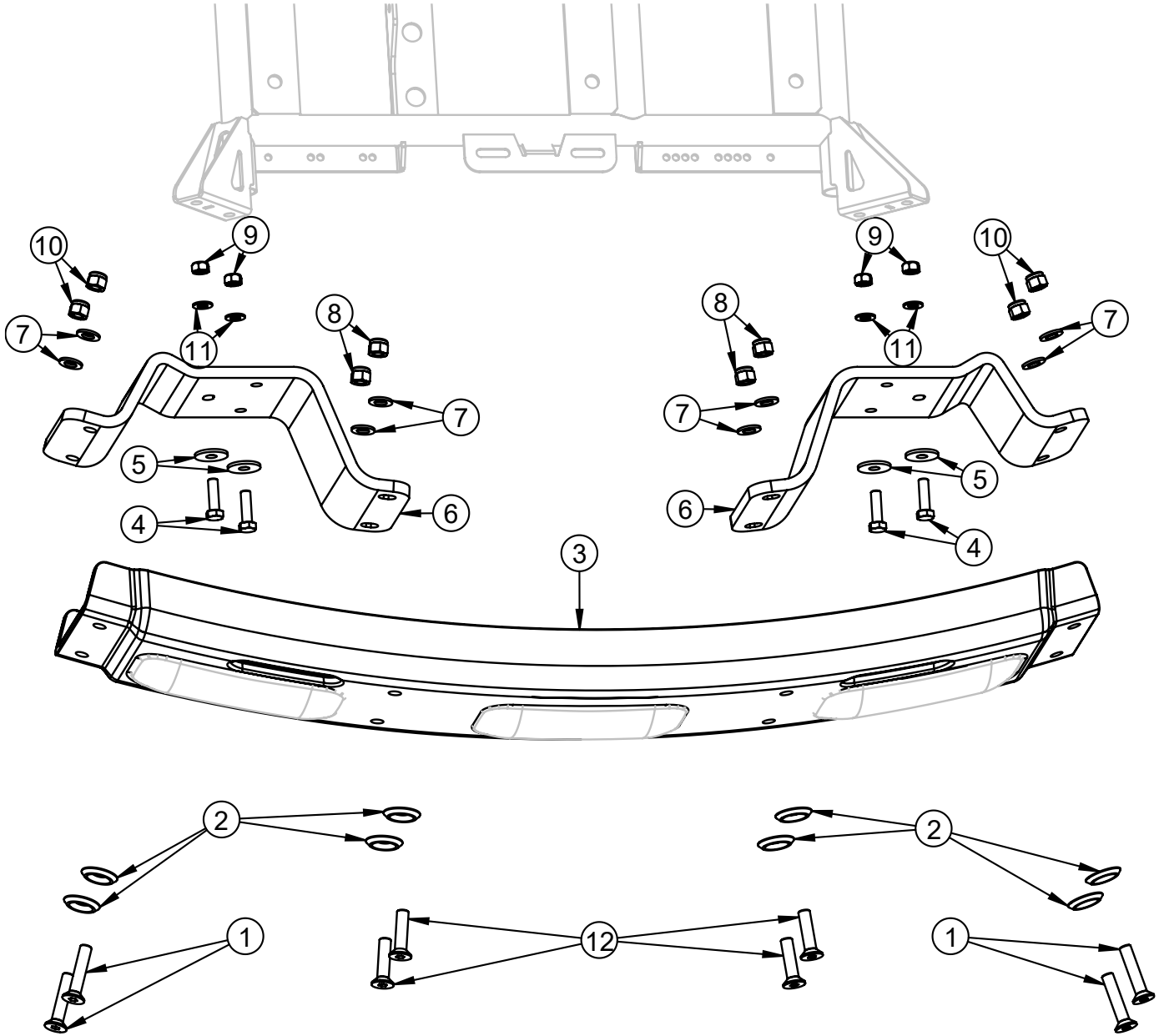

POS.	COD.	DESCRIZIONE	DESCRIPTION
1	AFN.02294	VITE M12X 50 SVASATA 5933	*M12X50 COUNTERSUNK HEAD SCREW*
2	SZ0.02367	RONDELLA 12 SVASATA BULLONE CENT	*CENTURION COUNTERSUNK BOLT M12 WASHER*
3	AFS.02160	FASCIA PARACOLPI CENTRALE POST.CENTURION	*REAR-CENTRAL BUFFER BAND CENT*
4	TES.10X035	VITE M10X 35 ESAGONALE 5739	*M10X35 HEXAGONAL HEAD SCREW*
5	AFN.00125	RONDELLA 10,5-30X2,5	*WASHER 10,5-30X2,5*
6	AFS.02166	BALESTRA POSTERIORE CENTURION	*REAR LEAF SPRING CENT*
7	AFN.02416	RONDELLA 12 -36X3	*12-36X3 WASHER*
8	AFN.02364	DADO M12 AUTOBLOCK ALTO	*M12 HIGH SELF-LOCKING NUT*
9	AFN.02393	DADO M10 AUTOBLOCK ALTO	*NUT M10 HIGH SELF-LOCKING*
10	AFN.02394	DADO M12 AUTOBLOCK BASSO	*M12 LOW SELF-LOCKING NUT*
11	AFN.01637	RONDELLA 10,5-20X2	*WASHER 10,5-20X2*
12	AFN.03561	VITE M12X 45 SVASATA 5933	*M12X 45 COUNTERSUNK HEAD SCREW*

PROTEZIONE LATERALE DESTRA – SIDE BUFFER R.H.

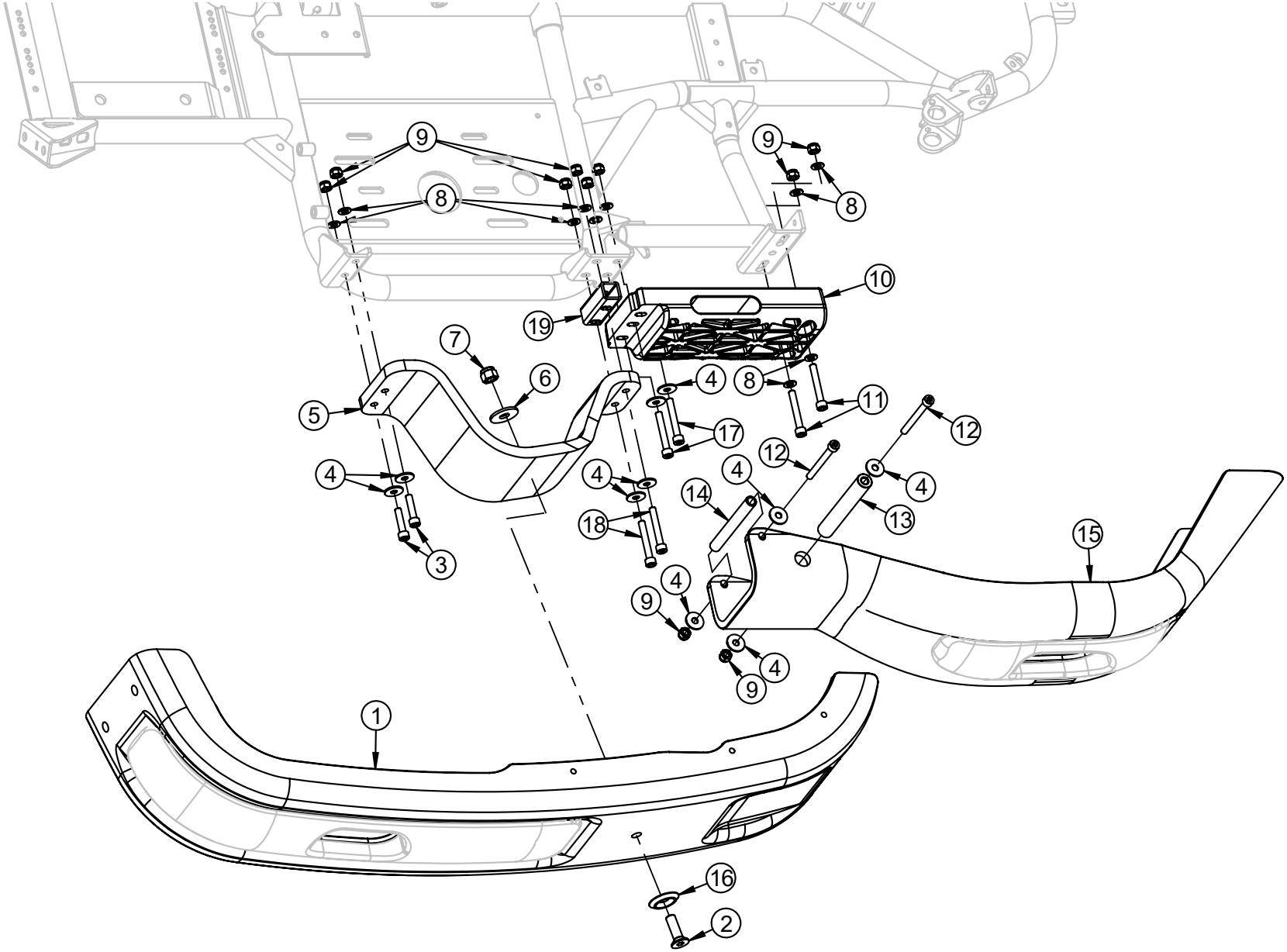

PROTEZIONE LATERALE DESTRA – SIDE BUFFER R.H.

POS.	COD.	DESCRIZIONE	DESCRIPTION
1	AFS.2160DS	FASCIA PARACOLPI LAT. POST. DX/SX CENT	*CENTURION REAR SIDE BUFFER BAND RH/LF*
2	AFN.02293	VITE M12X 40 SVASATA 5933	*M12X40 COUNTERSUNK HEAD SCREW*
3	AFN.02153	VITE M 8X 35 CILINDRICA 5931	*M 8X35 SOCKET HEAD SCREW*
4	AFN.02415	RONDELLA 8,5-24X2	*8,5-24X2 WASHER*
5	AFS.3158D	BALESTRA LATERALE DX CENT 2014	*SIDE LEAF SPRING RH CENT*
6	AFN.02416	RONDELLA 12 -36X3	*12-36X3 WASHER*
7	AFN.02364	DADO M12 AUTOBLOCK ALTO	*M12 HIGH SELF-LOCKING NUT*
8	AFN.00129	RONDELLA 8,5-17X1,5	*WASHER 8,5-17X1,5*
9	AFN.00128	DADO M 8 AUTOBLOCK ALTO	*NUT M8 HIGH SELF-LOCKING*
10	AFS.03867	BASE PROTEZIONE CENT STAMPATA	*CENTURION MOLDED BASE PROTECTION*
11	AFN.02915	VITE M 8X 55 CILINDRICA 5931	*M 8X 55 SOCKET HEAD SCREW*
12	AFN.02801	VITE M 8X150 CILINDRICA 5931	*M 8X150 SOCKET HEAD SCREW*
13	SZ0.00611	BUSSOLA FASCIA PARACOLPI LAT.POST.CENT	*CENTURION REAR BUSHING LINEAR FOR LAT. BUMPER*
14	SZ0.00597	BUSSOLA FASCIA PARACOLPI LAT.ANT.CENT 14	*CENTURION FRONT BUSHING LINER FOR LAT. BUMPER*
15	AFS.3149DS	FASCIA PARACOLPI LAT. ANT. DX/SX CENT STD	*CENTURION FRONT SIDE BUFFER BAND RH/LF*
16	SZ0.02367	RONDELLA 12 SVASATA BULLONE CENT	*CENTURION COUNTERSUNK BOLT M12 WASHER*
17	AFN.00159	VITE M 8X 45 CILINDRICA 5931	*M 8X45 SOCKET HEAD SCREW*
18	AFN.02311	VITE M 8X 60 CILINDRICA 5931	*M8X60 SOCKET HEAD SCREW*
19	SZ0.03960	DISTANZIALE TUBOLARE PER BALESTRA DX CENT	*SIDE LEAF SPRING SPACER*

PROTEZIONE LATERALE SINISTRA – SIDE BUFFER L.H.

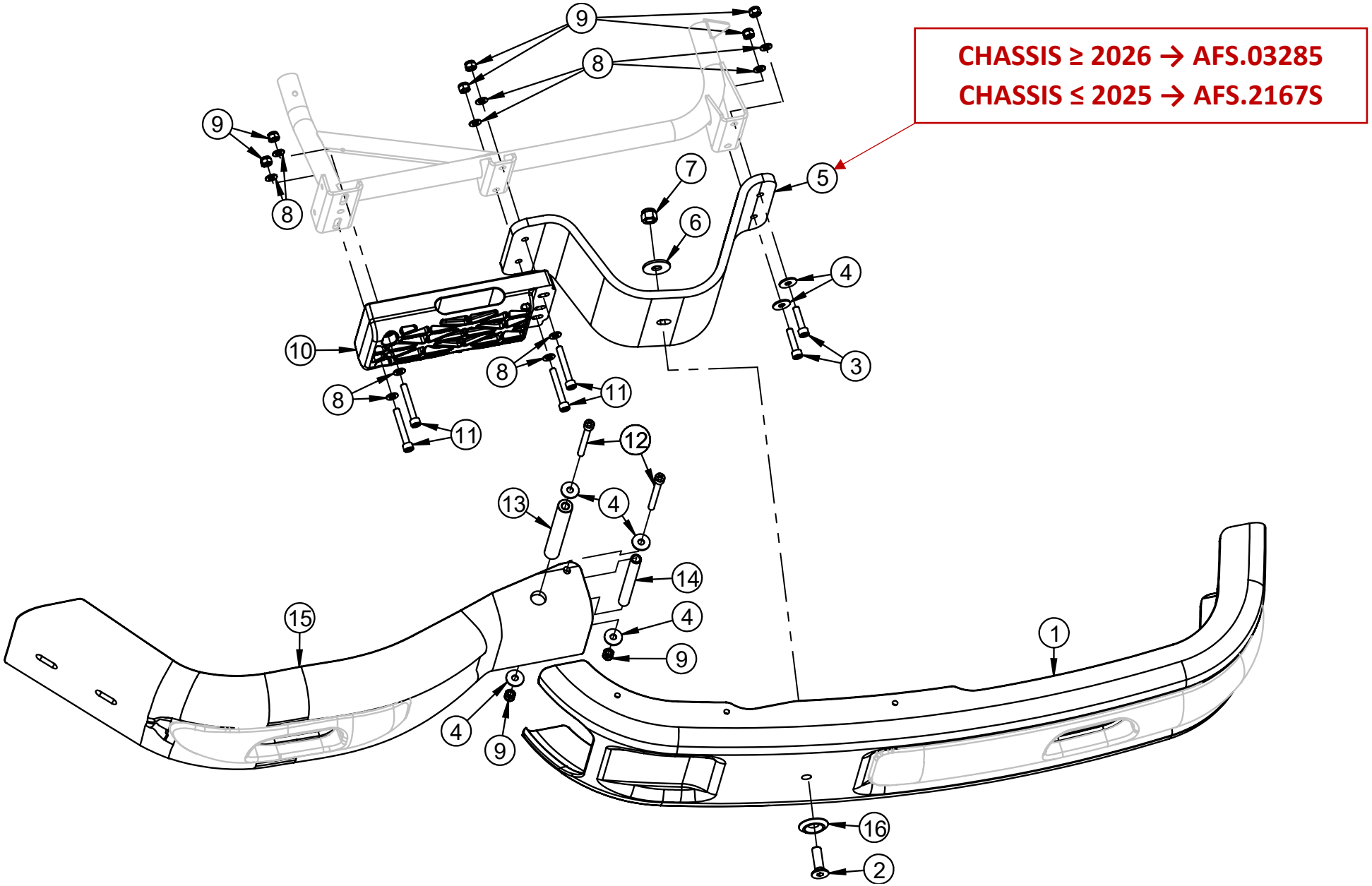

POS.	COD.	DESCRIZIONE	DESCRIPTION
1	AFS.2160DS	FASCIA PARACOLPI LAT. POST. DX/SX CENT	*CENTURION REAR SIDE BUFFER BAND RH/LF*
2	AFN.02293	VITE M12X 40 SVASATA 5933	*M12X40 COUNTERSUNK HEAD SCREW*
3	AFN.02153	VITE M 8X 35 CILINDRICA 5931	*M 8X35 SOCKET HEAD SCREW*
4	AFN.02415	RONDELLA 8,5-24X2	*8,5-24X2 WASHER*
5	AFS.2167S	BALESTRA LATERALE SX CENTURION	*SIDE LEAF SPRING LF CENT*
	AFS.03285	BALESTRA LATERALE DX/SX CE	SIDE LEAF SPRING RH/LF CENT EL
6	AFN.02416	RONDELLA 12 -36X3	*12-36X3 WASHER*
7	AFN.02364	DADO M12 AUTOBLOCK ALTO	*M12 HIGH SELF-LOCKING NUT*
8	AFN.00129	RONDELLA 8,5-17X1,5	*WASHER 8,5-17X1,5*
9	AFN.00128	DADO M 8 AUTOBLOCK ALTO	*NUT M8 HIGH SELF-LOCKING*
10	AFS.03867	BASE PROTEZIONE CENT STAMPATA	*CENTURION MOLDED BASE PROTECTION*
11	AFN.01095	VITE M 8X 70 CILINDRICA 5931	*M8X70 SOCKET HEAD SCREW*
12	AFN.02801	VITE M 8X150 CILINDRICA 5931	*M 8X150 SOCKET HEAD SCREW*
13	SZ0.00611	BUSSOLA FASCIA PARACOLPI LAT.POST.CENT	*CENTURION REAR BUSHING LINEAR FOR LAT. BUMPER*
14	SZ0.00597	BUSSOLA FASCIA PARACOLPI LAT.ANT.CENT 14	*CENTURION FRONT BUSHING LINER FOR LAT. BUMPER*
15	AFS.3149DS	FASCIA PARACOLPI LAT. ANT. DX/SX CENT STD	*CENTURION FRONT SIDE BUFFER BAND RH/LF*
16	SZ0.02367	RONDELLA 12 SVASATA BULLONE CENT	*CENTURION COUNTERSUNK BOLT M12 WASHER*

PLACCHE PARACOLPI – PLASTIC PLATE

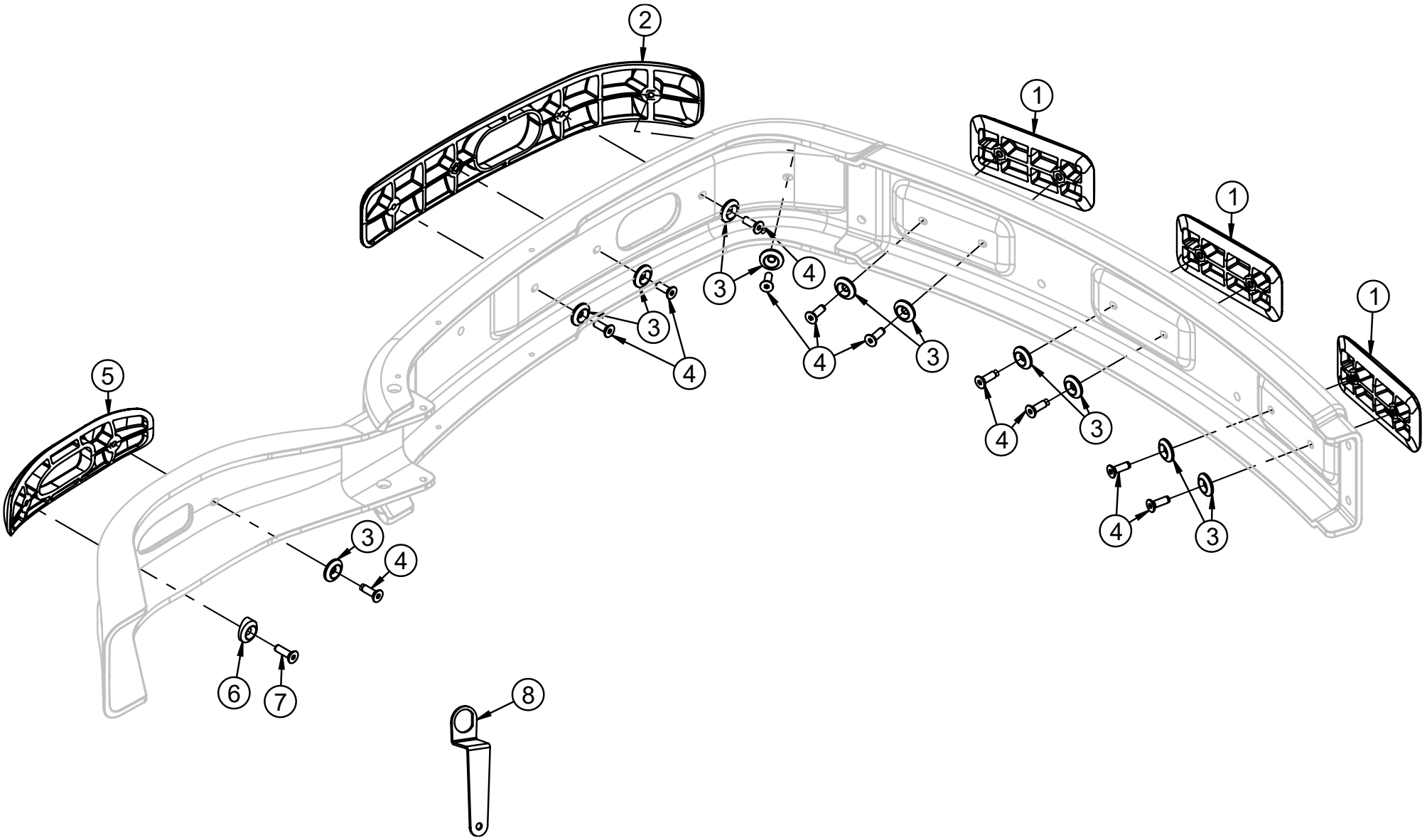

POS.	COD.	DESCRIZIONE	DESCRIPTION
1	AFS.00570	PLACCA PARACOLPI POSTERIORE CENT ARANCIONE	*PLASTIC PLATE REAR CENT*
	AFS.00570GIALLO	PLACCA PARACOLPI POSTERIORE CENT GIALLO	*PLASTIC PLATE REAR CENT*
	AFS.00570NERO	PLACCA PARACOLPI POSTERIORE CENT NERO	*PLASTIC PLATE REAR CENT*
	AFS.00570BLU	PLACCA PARACOLPI POSTERIORE CENT BLU	*PLASTIC PLATE REAR CENT BLU*
2	AFS.01455	PLACCA PARACOLPI LATERALE POST.CENT ARANCIONE	*PLASTIC PLATE REAR SIDE CENT*
	AFS.01455GIALLO	PLACCA PARACOLPI LATERALE POST.CENT GIALLO	*PLASTIC PLATE REAR SIDE CENT*
	AFS.01455NERO	PLACCA PARACOLPI LATERALE POST.CENT NERO	*PLASTIC PLATE REAR SIDE CENT*
	AFS.01455BLU	PLACCA PARACOLPI LATERALE POST.CENT BLU	*PLASTIC PLATE REAR SIDE CENT BLU*
3	SL1.03222	RONDELLA 10 SVASATA	*COUNTERSUNK WASHER M10*
4	TSV.10X030	VITE M10X 30 SVASATA 5933	*M10X 30 COUNTERSUNK HEAD SCREW*
5	AFS.01285	PLACCA PARACOLPI LATERALE ANT.CENT ARANCIONE	*PLASTIC PLATE FRONT SIDE CENT*
	AFS.01285GIALLO	PLACCA PARACOLPI LATERALE ANT.CENT GIALLO	*PLASTIC PLATE FRONT SIDE CENT*
	AFS.01285NERO	PLACCA PARACOLPI LATERALE ANT.CENT NERO	*PLASTIC PLATE FRONT SIDE CENT*
	AFS.01285BLU	PLACCA PARACOLPI LATERALE ANT.CENT BLU	*PLASTIC PLATE FRONT SIDE CENT BLU*
6	SL1.03223	RONDELLA 10 SVASATA INCLINATA	*COUNTERSUNK WASHER M10 INCLIN*
7	TSV.10X035	VITE M10X 35 SVASATA 5933	*M10X35 COUNTERSUNK HEAD SCREW*
8	SZ0.03227	CHIAVE RONDELLA SVASATA INCLINATA	*COUNTERSUNK WASHER KEY(BUMPER TOOL)*

SPOILER ANTERIORE – FRONT SPOILER

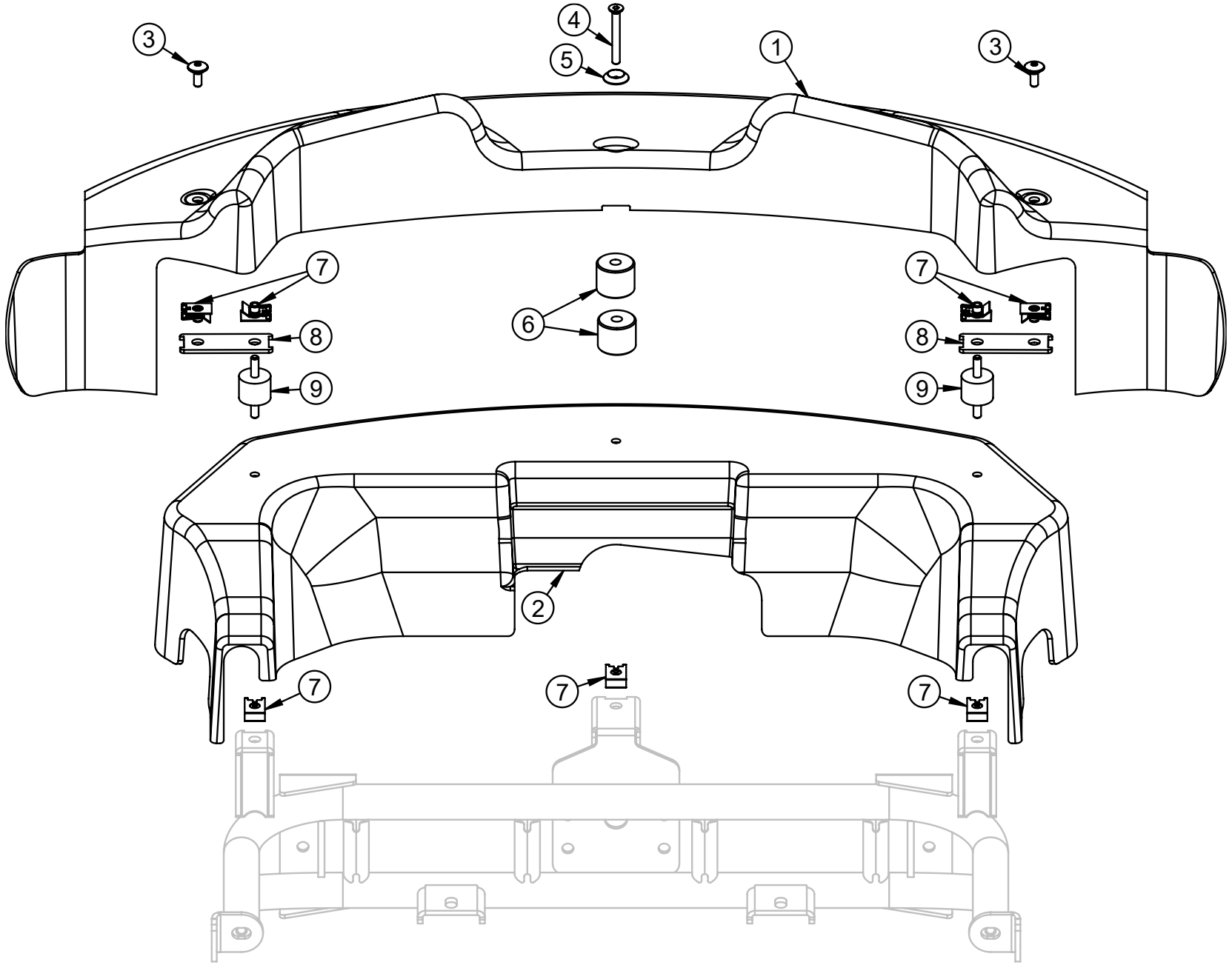

POS.	COD.	DESCRIZIONE	DESCRIPTION
1	AFS.04455	SPOILER ANTERIORE HERCULES	*FRONT SPOILER HERCULES*
2	AFS.0216807	PROTEZIONE PARAURTI ANTERIORE CENTURION	*CENT FRONT BUMPER PROTECTION*
3	AFS.00261	VITE TESTA TONDA LARGA M 6X 16 PIANALE	*FLOOR TRAY SCREW LARGE ROUND HEAD M6X16*
4	AFN.02322	VITE M 6X 70 SVASATA 5933	*M 6X 70 COUNTERSUNK HEAD SCREW*
5	SAN.00249	RONDELLA 6 SVASATA NERA	*WASHER 6 COUNTERSUNK BLACK*
6	SL1.04623	SPESSORE SPOILER Ø6,5-30X40	*NYLON SPOILER SPACER Ø6.5-30X40*
7	AFS.02327	CLIPS PRESTOLA M6 CENTURION	*CENTURION CLIPS M6 FOR FITTING*
8	SZ0.02511	PIASTRA SILENTBLOCK SPOILER DX/SX CENT	*SPOILER RH/LF SILENTBLOCK PLATE CENT*
9	AFS.02296	SILENTBLOCK M+M M 6 Ø25X20 CENTURION	*SILENTBLOCK M+M M 6 25X20 CENT*

CARENA DESTRA – SIDE FAIRING R.H.

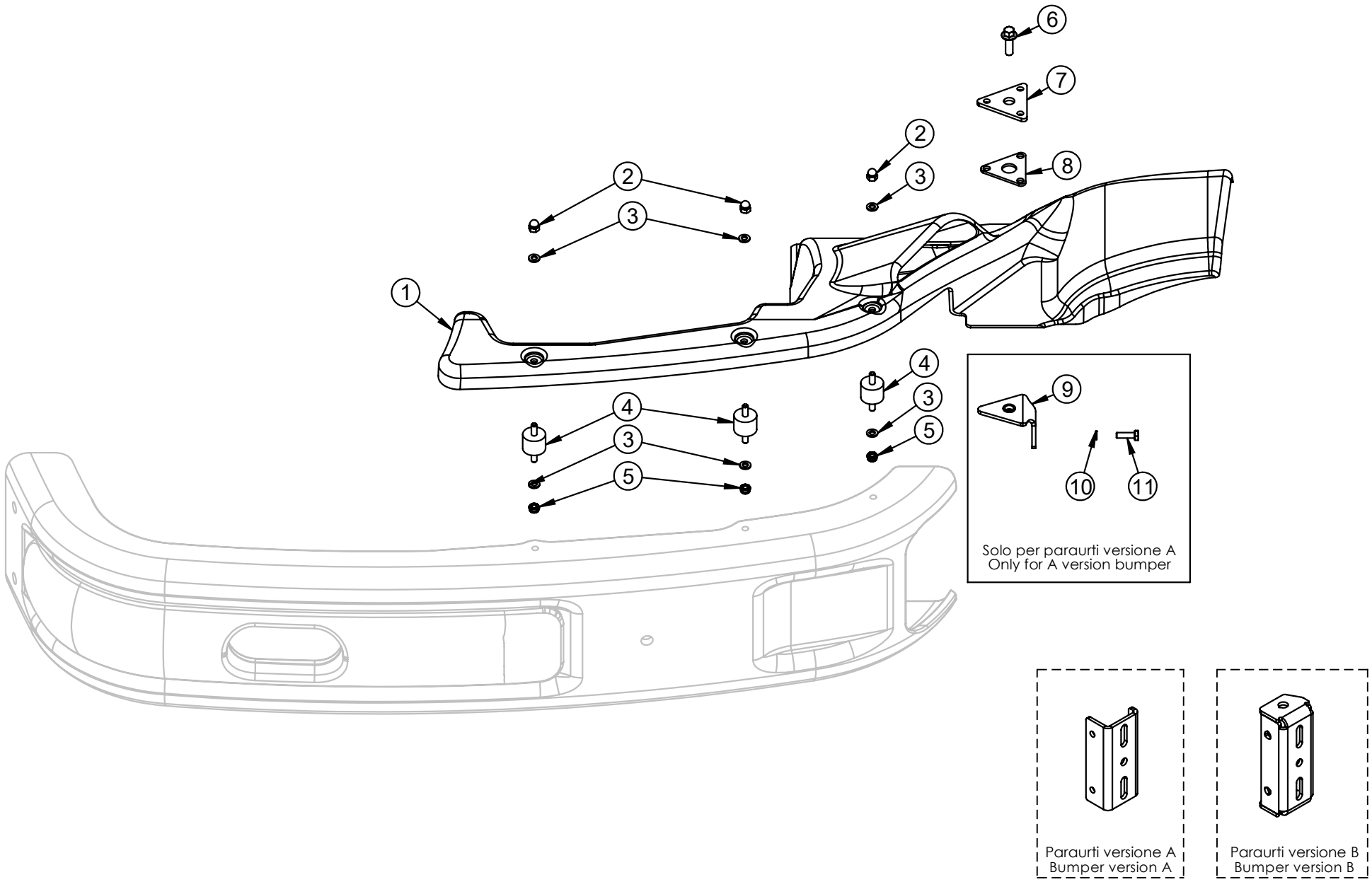

POS.	COD.	DESCRIZIONE	*DESCRIPTION*
1	AFS.4841D	CARENA LATERALE CENTURION 2019 DX	*SIDE FAIRING RH CENT*
2	SBN.02376	DADO M 6 CIECO ZINCATO CENT	*BLIND NUT M 6 BLACK CENT*
3	AFN.00263	RONDELLA 6,5-18X1,6	*WASHER 6,5-18X1,6*
4	AFS.02296	SILENTBLOCK M+M M 6 Ø25X20 CENTURION	*SILENTBLOCK M+M M 6 25X20 CENT*
5	AFN.00106	DADO M 6 AUTOBLOCK BASSO	*NUT M6 LOW SELF-LOCKING*
6	AFN.00968	VITE M 8X 25 FLANGIATA 6921	*M 8X25 FLANGED SCREW*
7	SC0.03073	PIASTRA ATTACCO CARENE CENT+CENTMINI	*SIDE BUMPER CONNECT.PLATE CENT+ CENT MINI*
8	AFS.03083	GOMMA ATTACCO CARENE CENTURIONMINI	*SIDE BUMPER RUBBER CENT MINI*
9	FM0.05025	SOSTEGNO ANT CARENA LATERALE CENT 2019 C/RIV. M8	*SIDE FAIRING SUPPORT CENT*
10	AFN.03732	RONDELLA ELASTICA SPACCATA GROWER M 6	*M6 ELASTIC WASHER GROWER*
11	AFN.00233	VITE M 6X 20 ESAGONALE 5739	*M6X20 HEXAGONAL HEAD SCREW*

CARENA SINISTRA - SIDE FAIRING L.H.

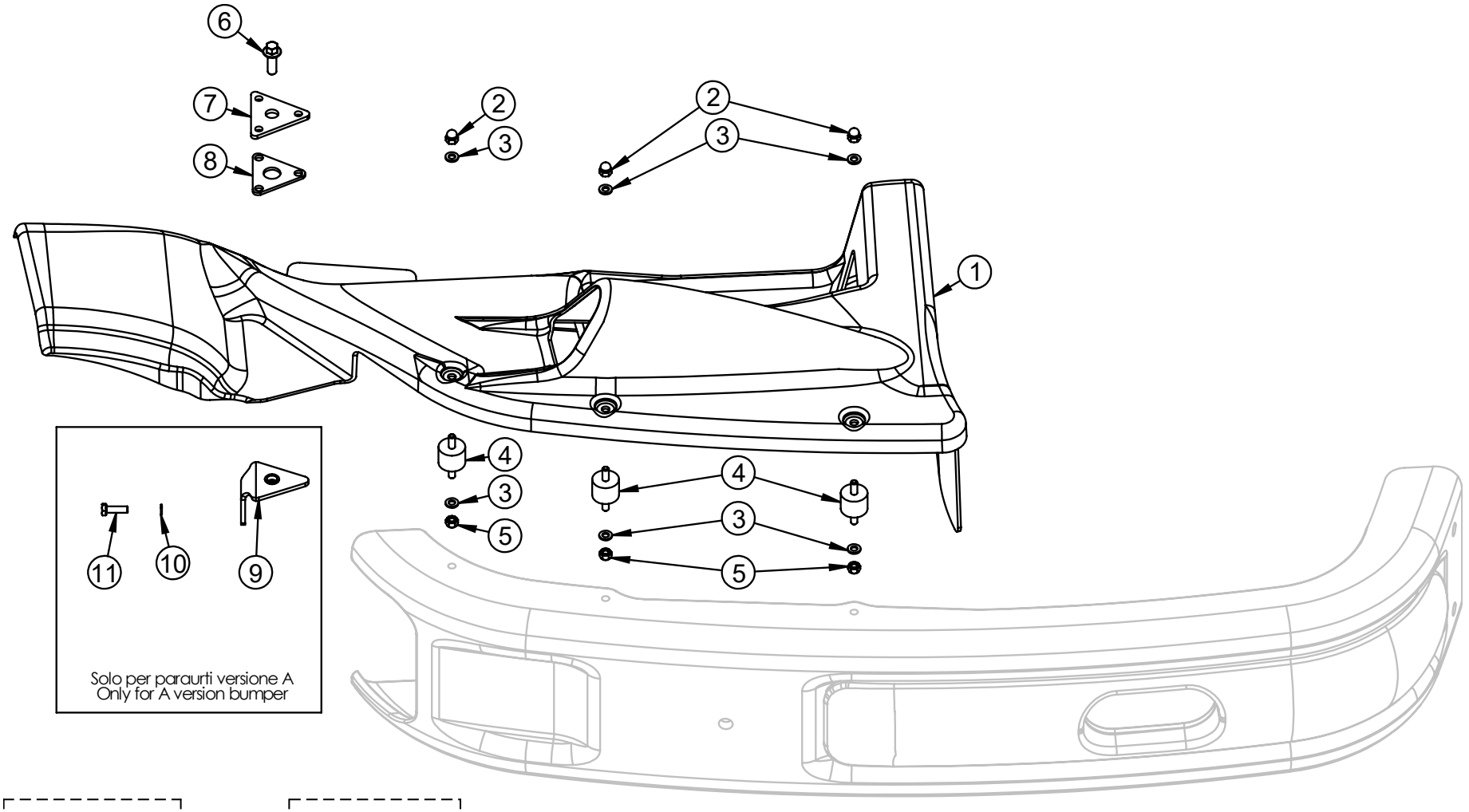

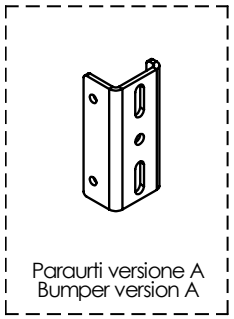
Paraurti versione A
Bumper version A

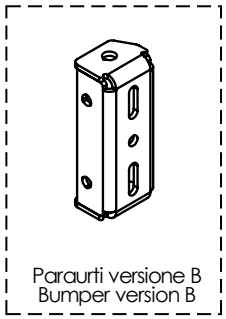
Paraurti versione B
Bumper version B

POS.	COD.	DESCRIZIONE	*DESCRIPTION*
1	AFS.4841S02	CARENA LATERALE CENTURION 2019 SX	*SIDE FAIRING LH CENT*
2	SBN.02376	DADO M 6 CIECO ZINCATO CENT	*BLIND NUT M 6 BLACK CENT*
3	AFN.00263	RONDELLA 6,5-18X1,6	*WASHER 6,5-18X1,6*
4	AFS.02296	SILENTBLOCK M+M M 6 Ø25X20 CENTURION	*SILENTBLOCK M+M M 6 25X20 CENT*
5	AFN.00106	DADO M 6 AUTOBLOCK BASSO	*NUT M6 LOW SELF-LOCKING*
6	AFN.00968	VITE M 8X 25 FLANGIATA 6921	*M 8X25 FLANGED SCREW*
7	SC0.03073	PIASTRA ATTACCO CARENE CENT+CENTMINI	*SIDE BUMPER CONNECT.PLATE CENT+ CENT MINI*
8	AFS.03083	GOMMA ATTACCO CARENE CENTURIONMINI	*SIDE BUMPER RUBBER CENT MINI*
9	FM0.05025	SOSTEGNO ANT CARENA LATERALE CENT 2019 C/RIV. M8	*SIDE FAIRING SUPPORT CENT*
10	AFN.03732	RONDELLA ELASTICA SPACCATA GROWER M 6	*M6 ELASTIC WASHER GROWER*
11	AFN.00233	VITE M 6X 20 ESAGONALE 5739	*M6X20 HEXAGONAL HEAD SCREW*

FRONTALINO – FRONT FAIRING

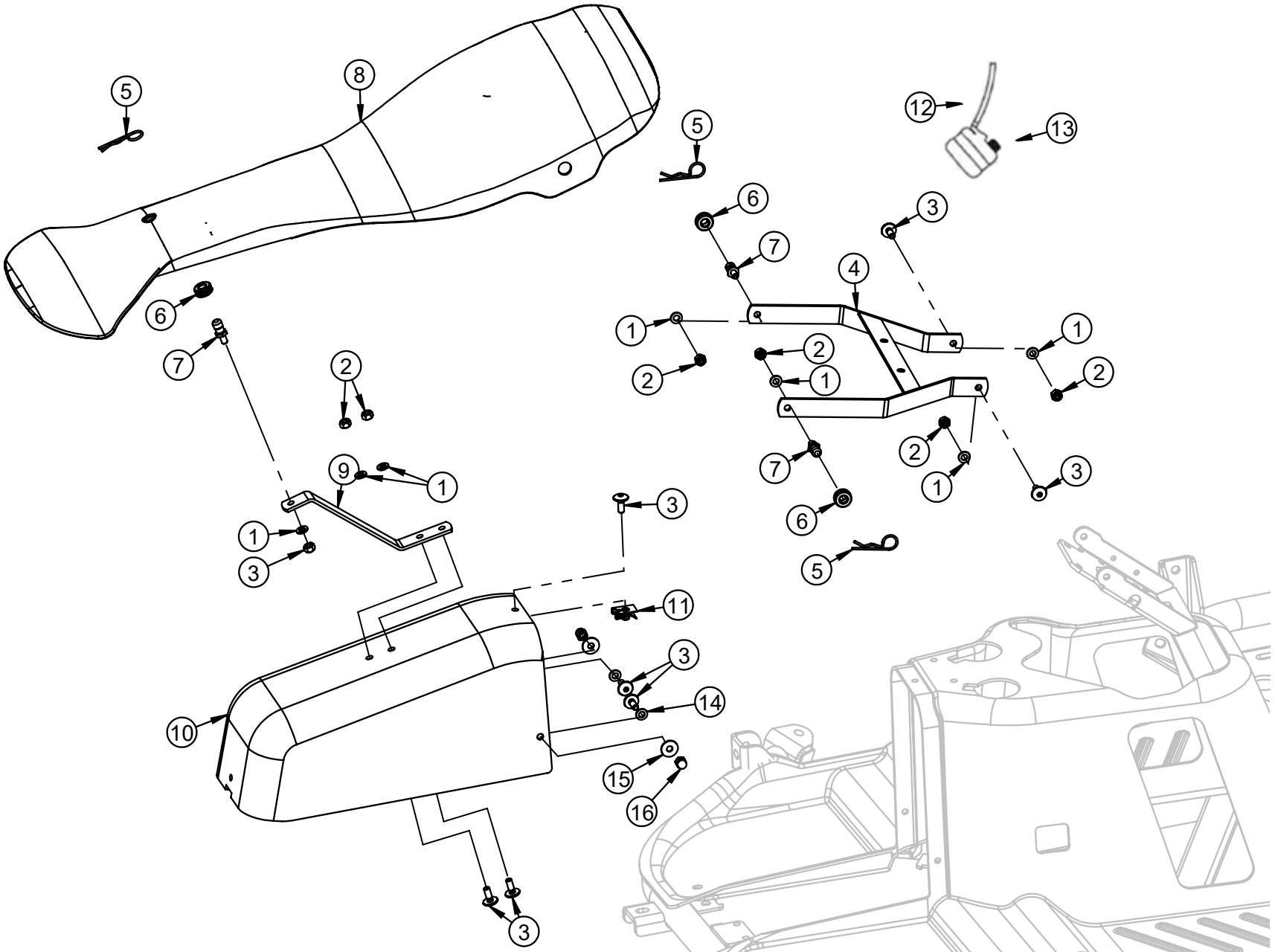

POS.	COD.	DESCRIZIONE	DESCRIPTION
1	AFN.00105	RONDELLA 6,5-12X1,5	*WASHER 6,5-12X1,5*
2	AFN.00106	DADO M 6 AUTOBLOCK BASSO	*NUT M6 LOW SELF-LOCKING*
3	AFS.00261	VITE TESTA TONDA LARGA M 6X 16 PIANALE	*FLOOR TRAY SCREW LARGE ROUND HEAD M6X16*
4	SC0.02270	SUPPORTO FRONTALINO SUPERIORE CENT	*FRONT FAIRING SUPPORT UPPER CENT*
5	SZ0.00102	SPINA ELASTICA SUPPORTO FRONTALINO	*FRONT FAIRING ELASTIC PIN*
6	AFS.04522	GOMMINO SUPPORTO FRONTALINO KG	*FRONT FAIRING RUBBER KG*
7	SBN.00103	PERNO SUPPORTO FRONTALINO INFERIORE	*FRONT FAIRING SUPPORT PIVOT BLACK*
8	AFS.06235	FRONTALINO NA3 MORBIDO NERO	*SOFT BLACK FRONT FAIRING*
9	SC0.02271	SUPPORTO FRONTALINO INFERIORE CENT	*FRONT FAIRING SUPPORT BUTTOM CENT*
10	AFS.03284	PROTEZIONE POMPA FRENO CE	*MASTER CYLINDER COVER CE*
11	AFS.02327	CLIPS PRESTOLA M6 CENTURION	*CENTURION CLIPS M6 FOR FITTING*
12	AMS.00139	TUBO BENZINA AL METRO	*FUEL PIPE PER METER*
13	AFS.00753	TANICA RECUPERO	*RECOVERY TANK*
14	AFN.02316	RONDELLA 8 DENTELLATA ZINC.6798	*COG WASHER 8 ZINCATED*
15	AFN.00263	RONDELLA 6,5-18X1,6	*WASHER 6,5-18X1,6*
16	SBN.02376	DADO M 6 CIECO ZINCATO CENT	*BLIND NUT M 6 BLACK CENT*

FRONTALINO 507 – FRONT FAIRING 507

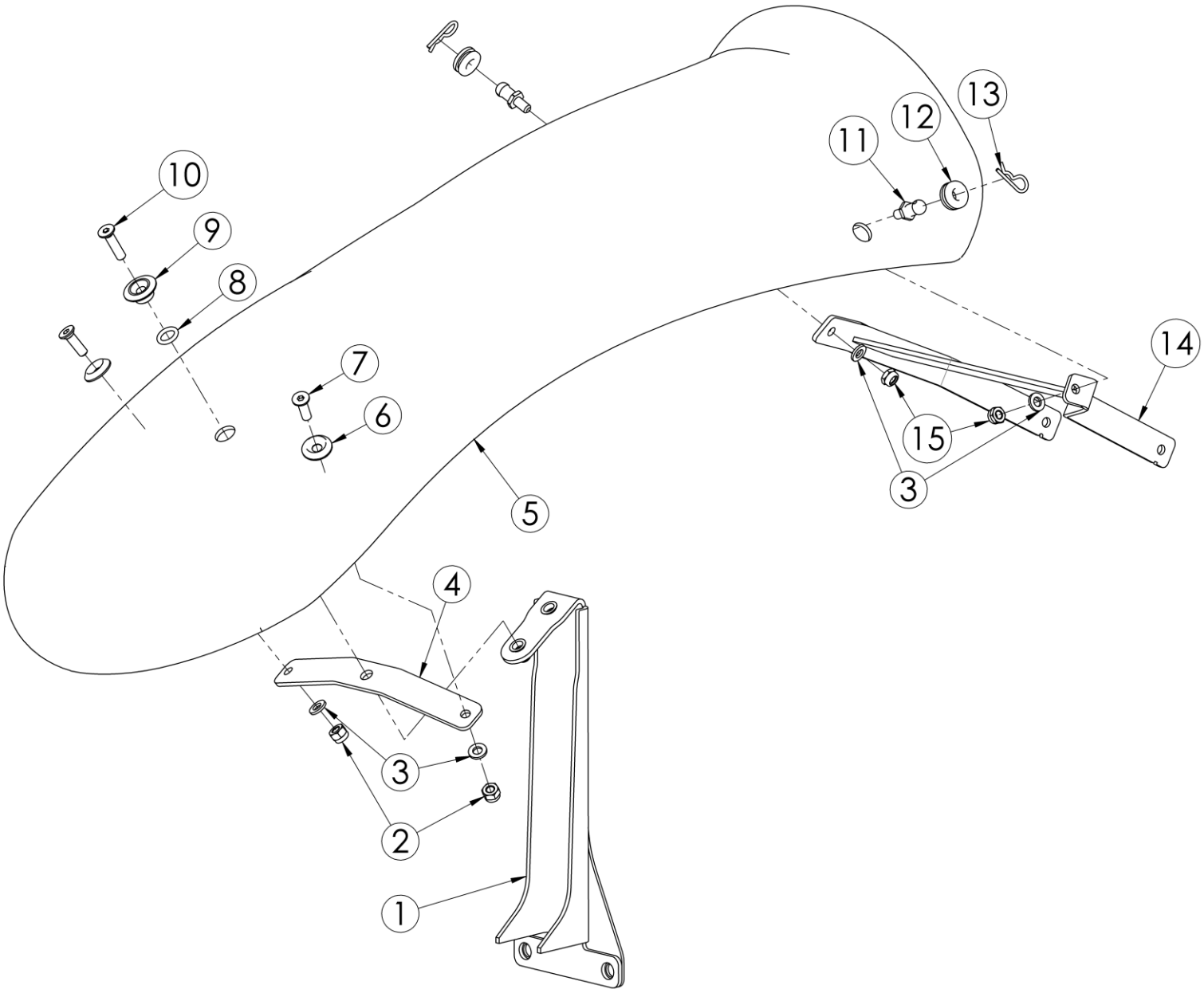

POS.	COD.	DESCRIZIONE	DESCRIPTION
1	FK0.06257	SUPPORTO FRONTALINO ANTERIORE CENT KG 507 + RIVET.	*FRONT FAIRING BRACKET CENT KG 507*
2	AFN.00264	DADO M 6 AUTOBLOCK ALTO	*NUT M6 HIGH SELF-LOCKING*
3	AFN.00105	RONDELLA 6,5-12X1,5	*WASHER 6,5-12X1,5*
4	SZ0.06348	RINFORZO SUPPORTO FRONTALINO KG 507/508	*507 FRONT FAIRING SUPPORT*
5	AFS.05867SOFT	FRONTALINO 507 CHIUSO CIK/FIA SOFT NERO	*FRONT FAIRING BLACK 507 SOFT*
6	SAN.00249	RONDELLA 6 SVASATA NERA	*WASHER 6 COUNTERSUNK BLACK*
7	AFN.00261	VITE M 6X 20 SVASATA 5933	*M6X20 COUNTERSUNK HEAD SCREW*
8	AFN.01379	OR RACCORDO TANICA	*FUEL TANK FITTING O-RING*
9	SAN.06349	DISTANZIALE A CAPPELLO SVASATO M6 Ø23 NERO	*M6 SPACER FRONT FAIRING 507*
10	AFN.00295	VITE M 6X 25 SVASATA 5933	*M6X25 COUNTERSUNK HEAD SCREW*
11	SBN.00103	PERNO SUPPORTO FRONTALINO INFERIORE	*FRONT FAIRING SUPPORT PIVOT BLACK*
12	AFS.04522	GOMMINO SUPPORTO FRONTALINO KG	*FRONT FAIRING RUBBER KG*
13	SZ0.00102	SPINA ELASTICA SUPPORTO FRONTALINO	*FRONT FAIRING ELASTIC PIN*
14	SC0.06329	SUPPORTO FRONTALINO SUPERIORE CENT KG 507	*FRONT FAIRING SUPPORT UPPER CENT KG 507*
15	AFN.00106	DADO M 6 AUTOBLOCK BASSO	*NUT M6 LOW SELF-LOCKING*

RUOTA ANTERIORE – FRONT WHEEL

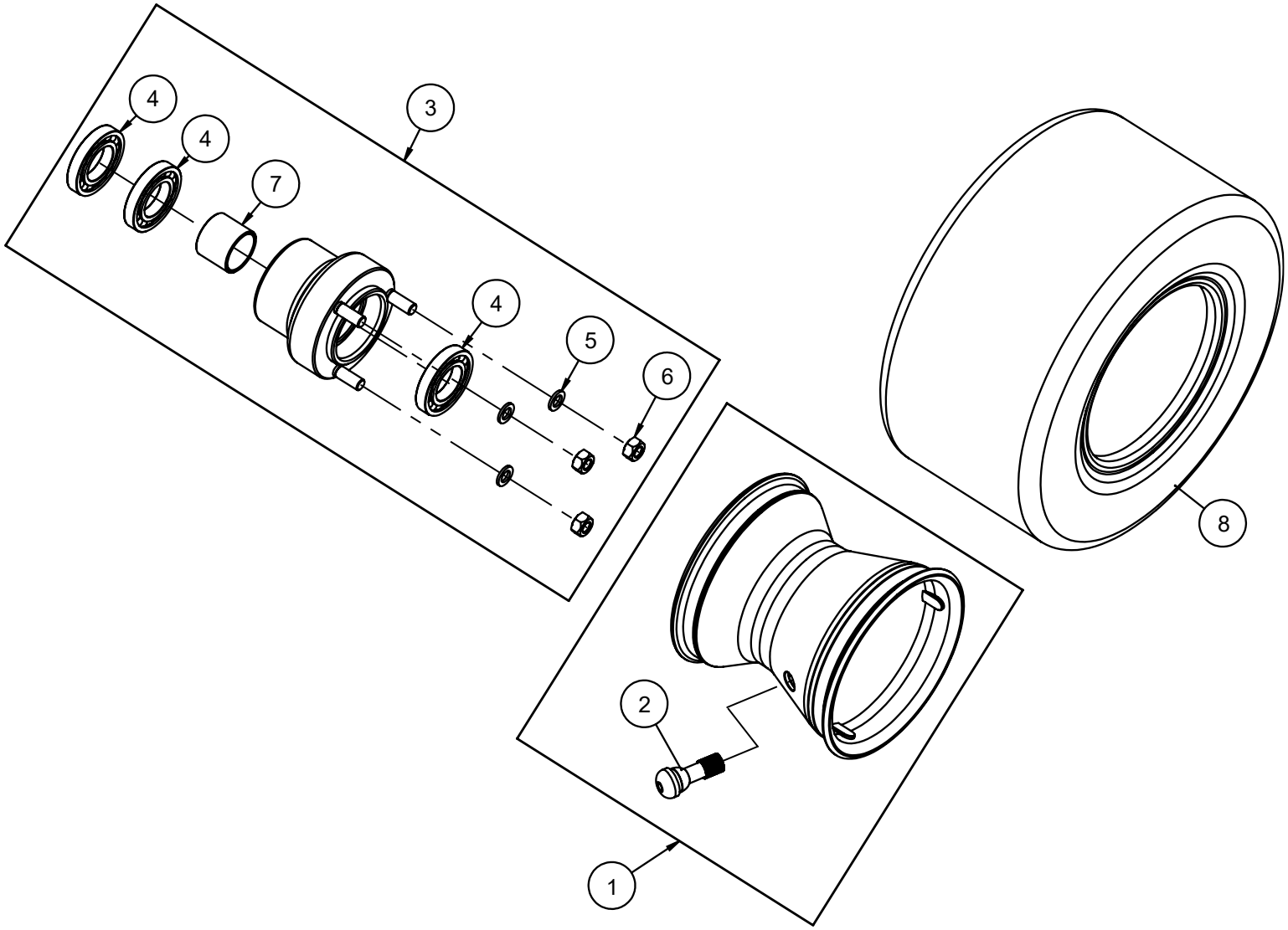

POS.	COD.	DESCRIZIONE	*DESCRIPTION*
1	FM0.03794	CERCHIO AL H132 ANT NO VITI CENT COMP.	*ALU FRONT WHEEL H132 N/SCREWS ASSY CENT*
2	AFS.02649	VALVOLA TUBLESS CORTA	*TUBLESS VALVE SHORT*
3	FM0.00640	MOZZO RUOTA ANTERIORE CORTO CENT	*FRONT WHEEL BOSS SHORT CENT*
4	AFN.00685	CUSCINETTO 6005 ZZ MOZZO ANT.NOL	*BEARING RENTAL FRONT WHEEL HUB*
5	AFN.00108	RONDELLA 8,5-18X2	*WASHER 8,5-18X2*
6	AFN.00128	DADO M 8 AUTOBLOCK ALTO	*NUT M8 HIGH SELF-LOCKING*
7	SZ0.04243	DISTANZIALE MOZZO ANT CENT	*CENTURION FRONT HUB SPACER*
8	XXX.XXXX	PNEUMATICO ANTERIORE (PREZZO A RICHIESTA)	*FRONT TIRE (PRICE ON REQUEST)*

RUOTA POSTERIORE – REAR WHEEL

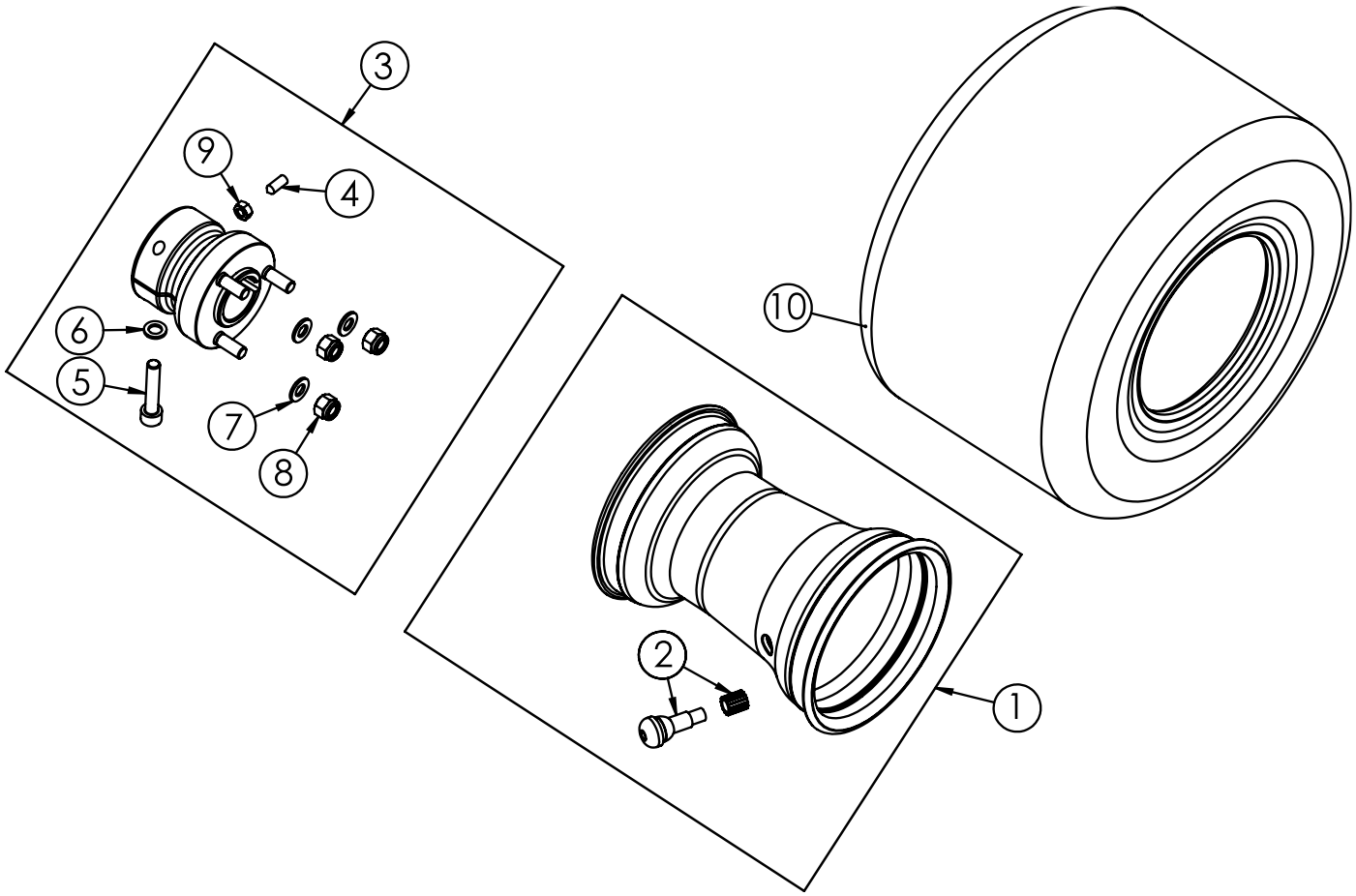

POS.	COD.	DESCRIZIONE	*DESCRIPTION*
1	FM0.00293NEUT	CERCHIO AL H180 POST NO VITI PUFFO/CENT NERO COMP.	*ALU REAR RIM H180 NO SCREWS BLACK COMPLETE*
2	AFS.02649	VALVOLA TUBLESS CORTA	*TUBLESS VALVE SHORT*
3	FM0.01845	MOZZO POSTERIORE 30X 60 CENTURION	*REAR HUB 30X 60 COMPLETE*
4	AFN.02639	GRANO M 6X20 TESTA PIANA	*M6X20 GRUB SCREW*
5	AFN.02153	VITE M 8X 35 CILINDRICA 5931	*M 8X35 SOCKET HEAD SCREW*
6	AFN.00287	RONDELLA 8,5-14X1,5	*WASHER 8,5-14X1,5*
7	AFN.00108	RONDELLA 8,5-18X2	*WASHER 8,5-18X2*
8	AFN.00128	DADO M 8 AUTOBLOCK ALTO	*NUT M8 HIGH SELF-LOCKING*
9	AFN.00106	DADO M 6 AUTOBLOCK BASSO	*NUT M6 LOW SELF-LOCKING*
10	XXX.XXXX	PNEUMATICO POSTERIORE (PREZZO SU RICHIESTA)	*REAR TIRE (PRICE ON REQUEST)*

MONTAGGIO MOTORE – ENGINE FITTING

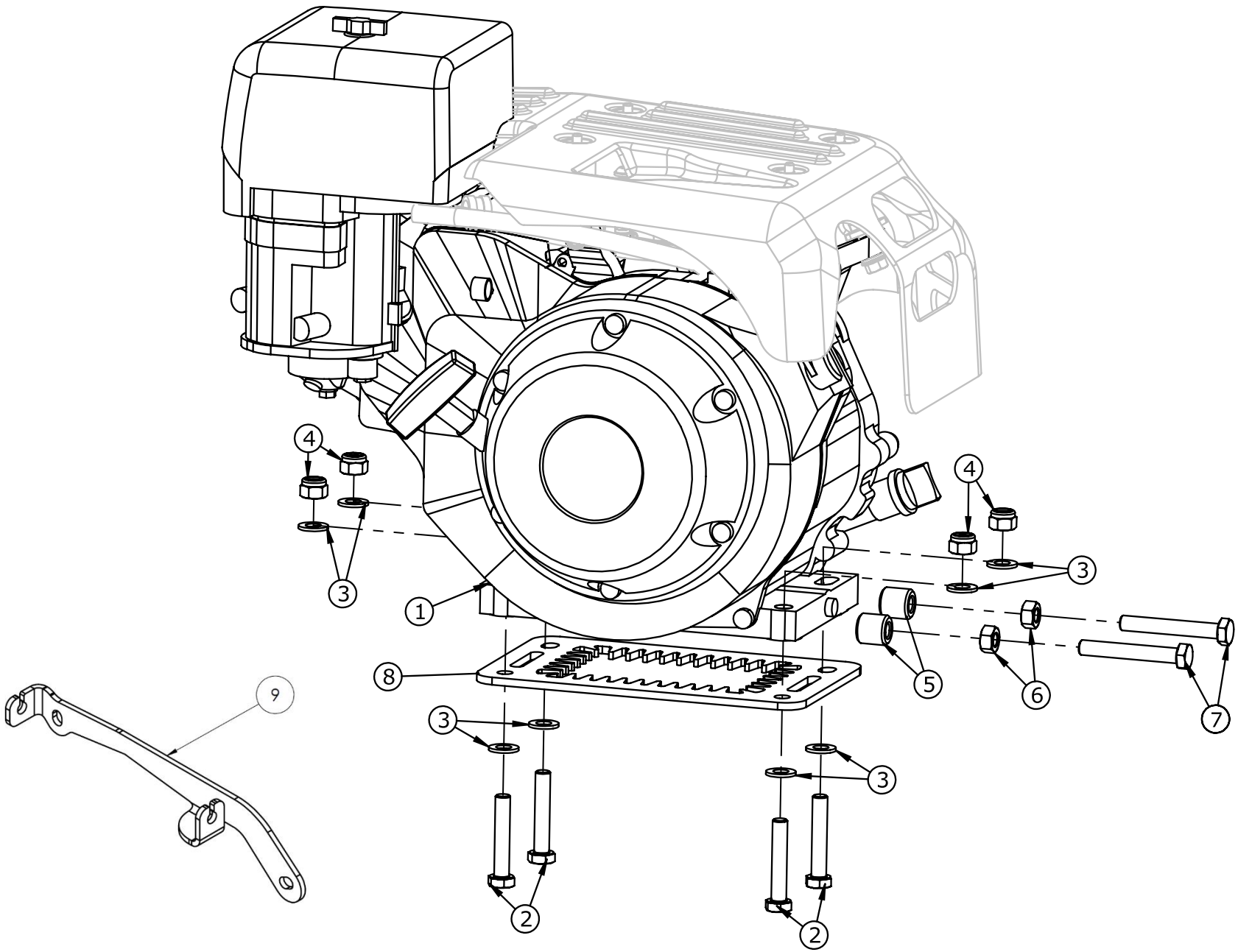

POS.	COD.	DESCRIZIONE	*DESCRIPTION*
1	AFS.03627	MOTORE HONDA GX270 NO TANICA 12V/25W RDG4	*HONDA ENGINE GX270 W/O FUEL TANK*
2	AFN.00982	VITE M10X 55 ESAGONALE 5739	*M10X 55 HEXAGONAL HEAD SCREW*
3	SZ0.02400	RONDELLA 10,5-28X4 MOTORE-TEND. CENT	*WASHER SPACER 10,5-28X4,5 CENT*
4	AFN.02393	DADO M10 AUTOBLOCK ALTO	*NUT M10 HIGH SELF-LOCKING*
5	FL1.03191	PUNTALE PLASTICA TENDIMOTORE CENT	*PLASTIC PIVOT FOR ENGINE TIGHTENER CENT*
6	AFN.00255	DADO M10	*NUT M10*
7	AFN.02149	VITE M10X 70 ESAGONALE 5739	*M10X 70 HEXAGONAL HEAD SCREW*
8	SZ0.04790	SMORZATORE SOTTOMOTORE GX270	*GX270 VIBRATION ABSORBER PLATE*
9	SZ0.04922	SUPPORTO REGISTRO CAVO ACCELLERATORE CENT	*ACCELERATION CABLE ADJUSTER SUPPORT CENT*

SUPP. CARENA MOTORE E POMPA BENZINA – ENGINE FAIRING AND FUEL PUMP SUPP

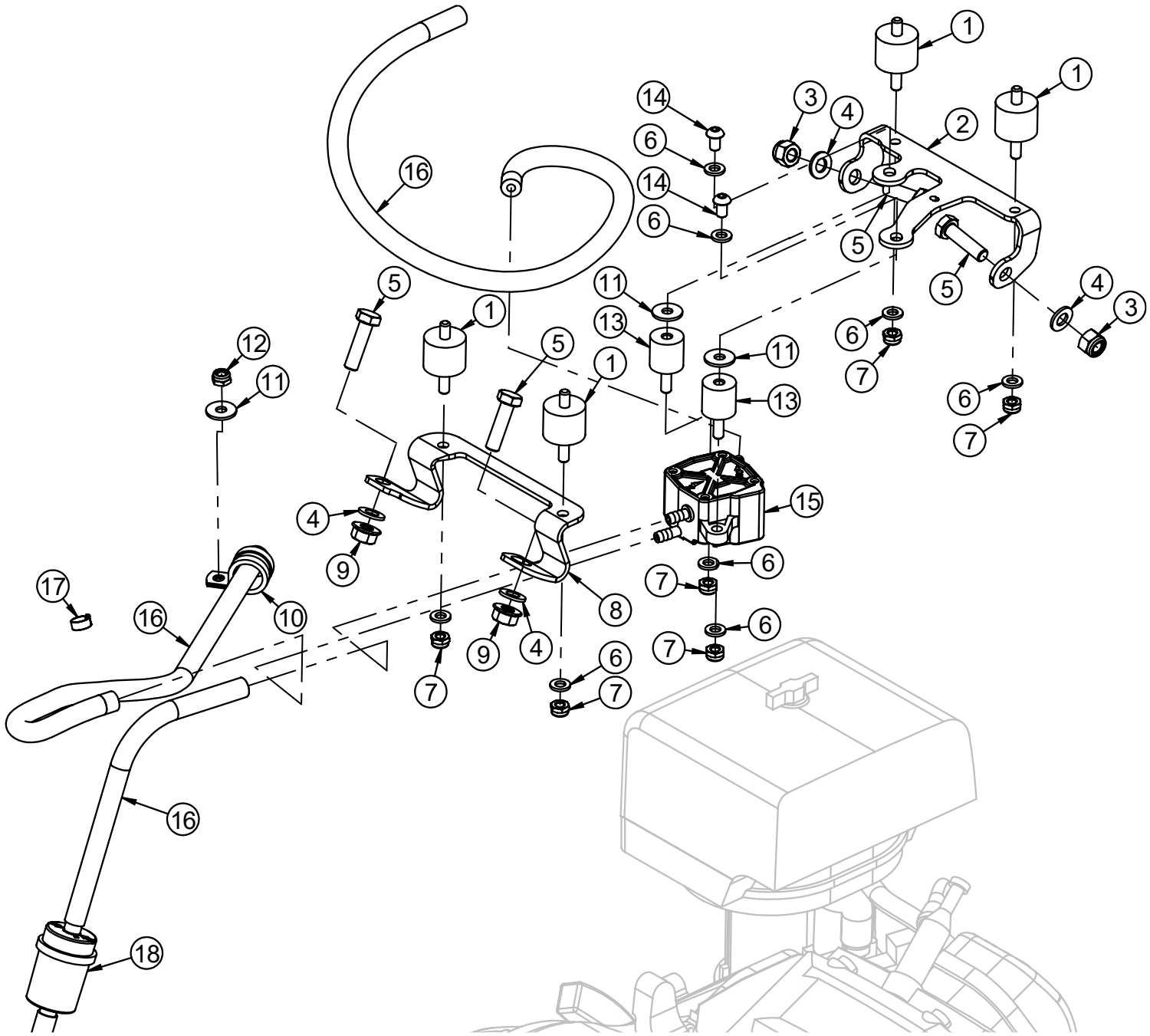

SUPP. CARENA MOTORE E POMPA BENZINA – ENGINE FAIRING SUPP. AND FUEL PUMP

POS.	COD.	DESCRIZIONE	*DESCRIPTION*
1	AFS.02296	SILENTBLOCK M+M M 6 Ø25X20 CENTURION	*SILENTBLOCK M+M M 6 25X20 CENT*
2	SZ0.04072	SUPPORTO CARENA MOTORE POST.CENT FRABEL/DELLORTO	*CENTURION PUMP REAR SIDE FAIRING BRACKET FRABEL DELL'ORTO*
3	AFN.00128	DADO M 8 AUTOBLOCK ALTO	*NUT M8 HIGH SELF-LOCKING*
4	AFN.00350	RONDELLA 8,5-16X1,5	*WASHER 8,5-16X1,5*
5	AFN.00307	VITE M 8X 30 ESAGONALE 5739	*M 8X30 HEXAGONAL HEAD SCREW*
6	AFN.00105	RONDELLA 6,5-12X1,5	*WASHER 6,5-12X1,5*
7	AFN.00264	DADO M 6 AUTOBLOCK ALTO	*NUT M6 HIGH SELF-LOCKING*
8	SZ0.03244	SUPPORTO CARENA MOTORE ANT.+4 CENT	*CENT ENGINE FRONT SIDE FAIRING BRACKET+4*
9	AFN.00128	DADO M 8 AUTOBLOCK ALTO	*NUT M8 HIGH SELF-LOCKING*
10	AFS.02948	FASCETTA FERMA TUBO 18 CENT	*18 HOSE CLAMP*
11	AFN.00263	RONDELLA 6,5-18X1,6	*WASHER 6,5-18X1,6*
12	AFN.00106	DADO M 6 AUTOBLOCK BASSO	*NUT M6 LOW SELF-LOCKING*
13	AFS.00760	GOMMINO RADIATORE (SILENTBLOCK 20/20 M6)	*RADIATOR SILENTBLOCK*
14	AFN.02152	VITE M 6X 12 BOMBATA 7380	*M 6X 12 CONVEX HEAD SCREW*
15	A90.4320000	POMPA BENZINA A DEPRESSIONE MX-60 CENT	*MX-60 FUEL PUMP*
16	AMS.04241	TUBO BENZINA AL METRO 5X10,5 CENTURION	*FUEL PIPE PER METER CENT 5X10,5*
17	AFN.02937	FASCETTA ACCIAIO 7-11 TUBO CENTURION	*STEEL BAND 7-11 CENT*
18	AFS.03869	FILTRO BENZINA GRANDE	*BIG FUEL FILTER*

SUPP. CARENA MOTORE E POMPA BENZINA V1.4 – ENGINE FAIRING SUPP. AND FUEL PUMP V1.4

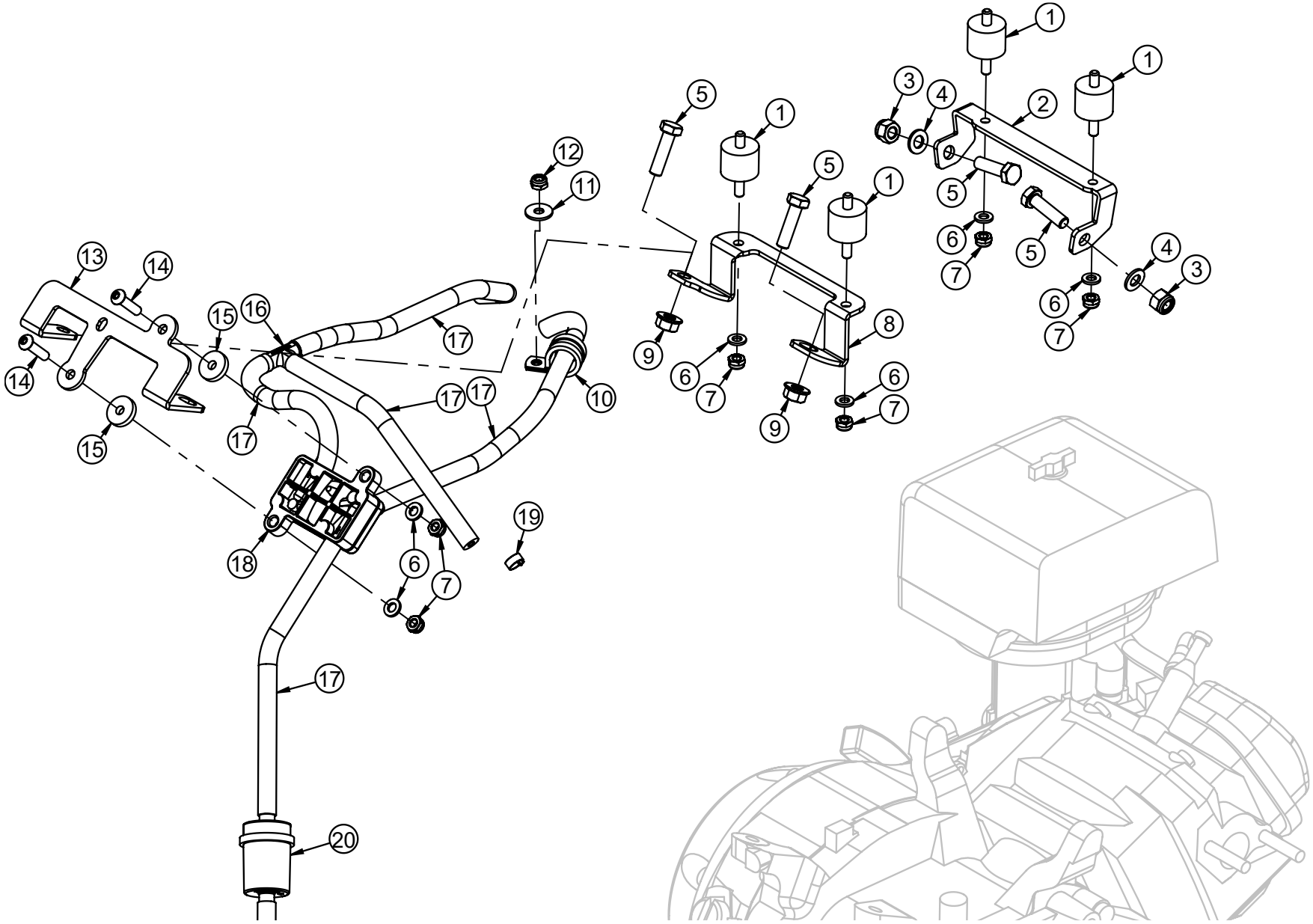

SUPP. CARENA MOTORE E POMPA BENZINA V1.4 – ENGINE FAIRING SUPP. AND FUEL PUMP V1.4

POS.	COD.	DESCRIZIONE	*DESCRIPTION*
1	AFS.02296	SILENTBLOCK M+M M 6 Ø25X20 CENTURION	*SILENTBLOCK M+M M 6 25X20 CENT*
2	SZ0.04072	SUPPORTO CARENA MOTORE POST.CENT FRABEL/DELLORTO	*CENTURION PUMP REAR SIDE FAIRING BRACKET FRABEL DELL'ORTO*
3	AFN.00128	DADO M 8 AUTOBLOCK ALTO	*NUT M8 HIGH SELF-LOCKING*
4	AFN.00350	RONDELLA 8,5-16X1,5	*WASHER 8,5-16X1,5*
5	AFN.00307	VITE M 8X 30 ESAGONALE 5739	*M 8X30 HEXAGONAL HEAD SCREW*
6	AFN.00105	RONDELLA 6,5-12X1,5	*WASHER 6,5-12X1,5*
7	AFN.00264	DADO M 6 AUTOBLOCK ALTO	*NUT M6 HIGH SELF-LOCKING*
8	SZ0.03244	SUPPORTO CARENA MOTORE ANT.+4 CENT	*CENT ENGINE FRONT SIDE FAIRING BRACKET+4*
9	AFN.00128	DADO M 8 AUTOBLOCK ALTO	*NUT M8 HIGH SELF-LOCKING*
10	AFS.02948	FASCETTA FERMA TUBO 18 CENT	*18 HOSE CLAMP*
11	AFN.00263	RONDELLA 6,5-18X1,6	*WASHER 6,5-18X1,6*
12	AFN.00106	DADO M 6 AUTOBLOCK BASSO	*NUT M6 LOW SELF-LOCKING*
13	SZ0.03245	SUPPORTO POMPA BENZINA FRABEL CENT	*CENT FUEL PUMP BRACKET FRABEL*
14	AFN.01917	VITE M 6X 25 BOMBATA 7380	*M 6X 25 CONVEX HEAD SCREW*
15	AFS.00258	GOMMINO PIANALE	*FLOOR TRAY RUBBER*
16	AFS.01982	RACCORDO T FESTO	*T-FITTING FESTO*
17	AMS.04241	TUBO BENZINA AL METRO 5X10,5 CENTURION	*FUEL PIPE PER METER CENT 5X10,5*
18	AFS.02759	POMPA BENZINA MIKUNI QUADRATA CENTURION	*FUEL PUMP MIKUNI SQUARED CENT*
19	AFN.02937	FASCETTA ACCIAIO 7-11 TUBO CENTURION	*STEEL BAND 7-11 CENT*
20	AFS.01016	FILTRO BENZINA RR	*FUEL FILTER*

CATENA - CHAIN

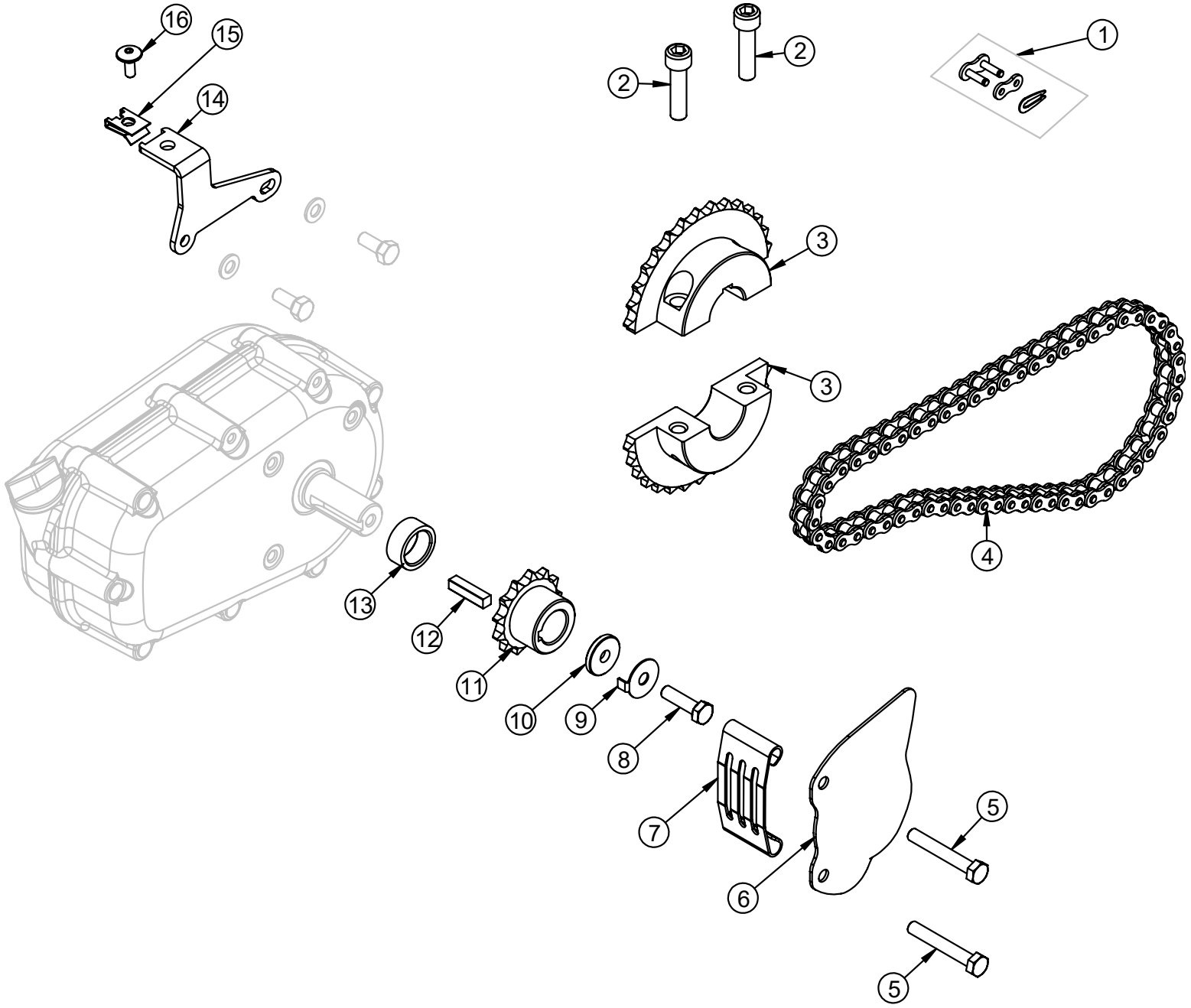

POS.	COD.	DESCRIZIONE	*DESCRIPTION*
1	AMS.00779	MAGLIA CONGIUNZIONE CATENA KZ	*JOINING LINK FOR CHAIN KZ*
2	AFN.00132	VITE M 8X 40 CILINDRICA 5931	*M8X40 SOCKET HEAD SCREW*
3	FM0.04418	CORONA Z24 D30 CENT CRG CON VITI COMP.	*SPROCKET Z24 D30 CENT CRG W/SCREWS COMPL.*
	FM0.04419	CORONA Z25 D30 CENT CRG CON VITI COMP.	*SPROCKET Z25 D30 CENT CRG W/SCREWS COMPL.*
	FM0.04407	CORONA Z26 D30 CENT CRG CON VITI COMP.	*SPROCKET Z26 D30 CENT CRG W/SCREWS COMPL.*
	FM0.04219	CORONA Z28 D30 CENT CRG CON VITI COMP.	*SPROCKET Z28 D30 CENT CRG W/SCREWS COMPL.*
	FM0.04320	CORONA Z30 D30 CENT CRG CON VITI COMP.	*SPROCKET Z30 D30 CENT CRG W/SCREWS COMPL.*
	AFS.02507	CORONA Z31 D30 CENT RR	*AXLE SPROCKET D30 31T CENT*
	AFS.02059	CORONA Z32 D30 CENT RR	*AXLE SPROCKET D30 32T CENT*
4	AMS.00671	CATENA AL METRO KZ STANDARD	*KZ CHAIN PER METER STD*
5	AFN.00127	VITE M 8X 55 BOMBATA 7380	*M 8X55 CONVEX HEAD SCREW*
6	SZ0.03435	PROTEZIONE PULEGGIA CENT (IMBUTITA)	*FRONT SPROCKET PROTECTION COVER*
7	SZ0.03634	PROTEZIONE FRONTALE PULEGGIA CENT	*GX390 REAR SPROCKET PROTECTION COVER*
8	AFN.03516	VITE M 8X 25 ESAGONALE 10.9 5739	*M 8X25 HEX SCREW*
9	SZ0.03586	RONDELLA SICUREZZA PIGNONE MOTORE CENT	*GEAR MOTOR SAFETY WASHER*
10	SZ0.02365	RONDELLA PIGNONE X GX270 CENTURION	*SPROCKET WASHER FOR GX270 CENTURION*
11	SZ0.02501	PIGNONE MOTORE Z12 CENTURION	*ENGINE GEAR 12T CENT*
	SZ0.00668	PIGNONE MOTORE Z13 CENTURION	*ENGINE GEAR 13T CENT*
	SZ0.02502	PIGNONE MOTORE Z14 CENTURION	*ENGINE GEAR T14 CENT*
	SZ0.02503	PIGNONE MOTORE Z15 CENTURION	*ENGINE GEAR 15T CENT*
	SZ0.03973	PIGNONE MOTORE Z16 CENTURION	*ENGINE GEAR 16T CENT*
	SZ0.03974	PIGNONE MOTORE Z17 CENTURION	*ENGINE GEAR 17T CENT*
12	SL1.02550	CHIAVETTA 7X7X33 CENTURION	*KEY 7X7X33 CENT*
13	SZ0.01292	SPESSORE PIGNONE HONDA 270 CENT	*GEAR SPACER HONDA 270 CENT*
	SZ0.03806	SPESSORE PULEGGIA MOTORE 390 CENTURION	*ENGINE PULLEY SPACER CENT*
14	SZ0.02283	SUPPORTO CARENA MOTORE SX CENTURION	*ENGINE FAIRING LF CENT*
15	AFS.02327	CLIPS PRESTOLA M6 CENTURION	*CENTURION CLIPS M6 FOR FITTING*
16	AFS.00261	VITE TESTA TONDA LARGA M 6X 16 PIANALE	*FLOOR TRAY SCREW LARGE ROUND HEAD M6X16*

CINGHIA – BELT

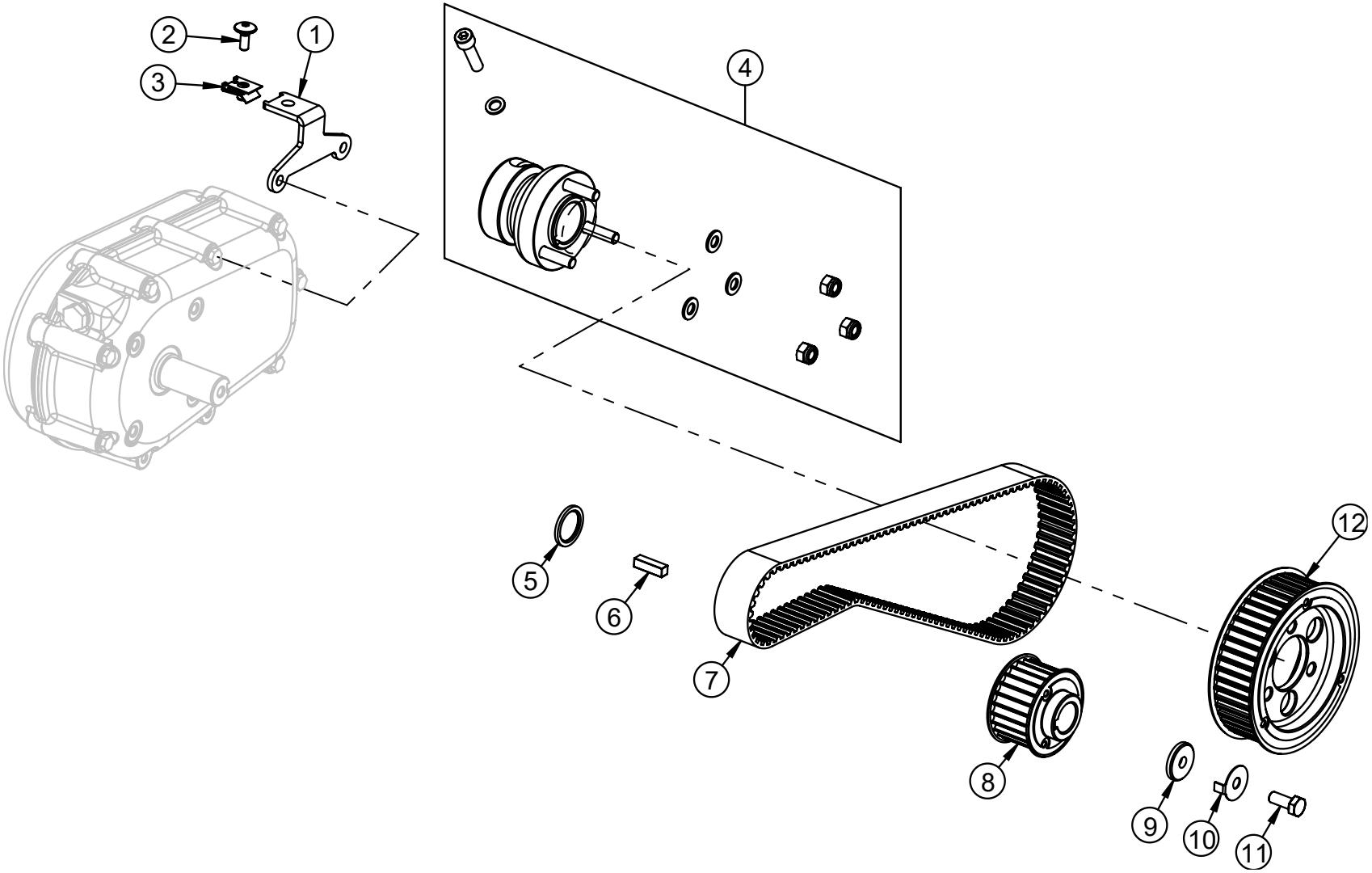

POS.	COD.	DESCRIZIONE	*DESCRIPTION*
1	SZ0.02283	SUPPORTO CARENA MOTORE SX CENTURION	*ENGINE FAIRING LF CENT*
2	AFS.00261	VITE TESTA TONDA LARGA M 6X 16 PIANALE	*FLOOR TRAY SCREW LARGE ROUND HEAD M6X16*
3	AFS.02327	CLIPS PRESTOLA M6 CENTURION	*CENTURION CLIPS M6 FOR FITTING*
4	FM0.01845	MOZZO POSTERIORE 30X 60 CENTURION	*REAR HUB 30X 60 COMPLETE*
5	SZ0.02366	SPESSORE PULEGGIA MOTORE CENTURION	*ENGINE PULLEY SPACER CENT*
6	SL1.02550	CHIAVETTA 7X7X33 CENTURION	*KEY 7X7X33 CENT*
7	AFS.02123	CINGHIA 920 8M 30 CENT	*BELT 920 8M 30 CENT*
	AFS.01876	CINGHIA 960 8M 30 CENT	*BELT 960 8M 30 CENT*
8	FM0.02125	PULEGGIA MOTORE 30MM Z24 8M FE C/VITI	*ENGINE SPROCKET ASSY 30MM 24T 8M*
	FM0.03180	PULEGGIA MOTORE 30MM Z26 8M FE C/VITI	*ENGINE SPROCKET ASSY 30MM 26T 8M*
	FM0.03167	PULEGGIA MOTORE 30MM Z28 8M FE C/VITI	*ENGINE SPROCKET ASSY 30MM 28T 8M*
9	SZ0.02365	RONDELLA PIGNONE X GX270 CENTURION	*SPROCKET WASHER FOR GX270 CENTURION*
10	SZ0.03586	RONDELLA SICUREZZA PIGNONE MOTORE CENT	*GEAR MOTOR SAFETY WASHER*
11	AFN.00909	VITE M 8X 20 ESAGONALE	*M8X20 HEXAGONAL HEAD SCREW*
12	SZ0.03362	PULEGGIA ASSALE 30MM Z36 8M FE NO VITI	*AXLE PULLEY STEEL 30MM T36 8M*
	SZ0.03361	PULEGGIA ASSALE 30MM Z38 8M FE NO VITI	*AXLE PULLEY STEEL 30MM T38 8M*
	FM0.02126	PULEGGIA ASSALE 30MM Z44 8M FE C/VITI	*AXLE PULLEY STEEL 30MM T44 8M*
	FM0.01399	PULEGGIA ASSALE 30MM Z46 8M FE C/VITI	*AXLE PULLEY STEEL 30MM T46 8M*
	FM0.01387	PULEGGIA ASSALE 30MM Z48 8M FE C/VITI	*AXLE PULLEY STEEL 30MM T48 8M*
	FM0.03333	PULEGGIA ASSALE 30MM Z51 8M ALL C/VITI	*AXLE PULLEY ALUMINIUM 30MM T51 8M*
	FM0.03334	PULEGGIA ASSALE 30MM Z52 8M ALL C/VITI	*AXLE PULLEY ALUMINIUM 30MM T52 8M*
	FM0.03360	PULEGGIA ASSALE 30MM Z54 8M ALL C/VITI	*AXLE PULLEY ALUMINIUM 30MM T54 8M*
	FM0.03407	PULEGGIA ASSALE 30MM Z56 8M ALL C/VITI	*AXLE PULLEY ALUMINIUM 30MM T56 8M*
	FM0.03488	PULEGGIA ASSALE 30MM Z60 8M ALL C/VITI	*AXLE PULLEY ALUMINIUM 30MM T60 8M*
	FM0.03489	PULEGGIA ASSALE 30MM Z64 8M ALL C/VITI	*AXLE PULLEY ALUMINIUM 30MM T64 8M*

TENDICATENA E TENDICINGHIA – CHAIN AND BELT TIGHTENER

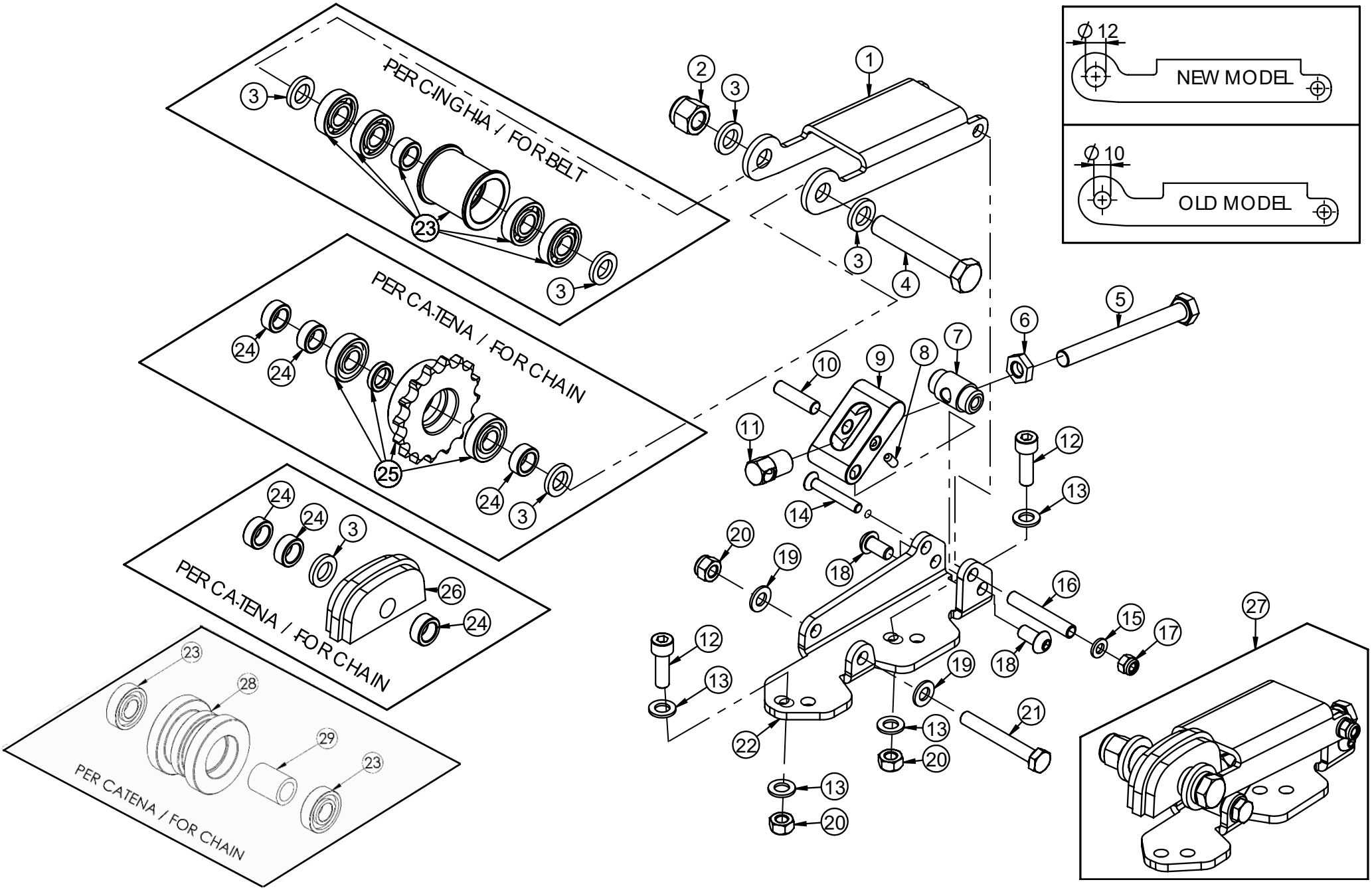

POS.	COD.	DESCRIZIONE	*DESCRIPTION*
1	SZ0.04189	PIASTRA TENDICINGHIA CENT 2014 Ø12	*BELT TIGHTENER PLATE CENTURION Ø12*
2	AFN.02394	DADO M12 AUTOBLOCK BASSO	*M12 LOW SELF-LOCKING NUT*
3	SZ0.05365	RONDELLA 12-20X2,5 (FUSELLO CENT)	*WASHER 12 - 20X2,5*
4	AFN.04200	VITE M12X 70 ESAGONALE 5739 ZINCATA	*M12X70 HEXAGONAL HEAD SCREW*
5	AFN.01608	VITE M10X110 ESAGONALE 5739	*M10X110 HEXAGONAL HEAD SCREW*
6	AFN.02393	DADO M10 AUTOBLOCK ALTO	*NUT M10 HIGH SELF-LOCKING*
7	SZ0.03203	BUSSOLA VITE FIX TENDICINGHIA CENT 2014	*BELT TIGHTENER FIX SCREW BUSHING CENT*
8	AFN.02390	GRANO M 5X10 CASTER DOPPIO	*GRUB SCREW M 5X10 DOUBLE CASTER*
9	SC0.03204	LEVA TENDICINGHIA CENT 2014	*BELT TIGHTENER LEVER FOR CENTURION*
10	SZ0.03205	PERNO D8X32 CENT 2014	*PIVOT D8X32 CENT*
11	SZ0.03202	BUSSOLA LEVA TENDICINGHIA CENT 2014	*BELT TIGHTENER LEVER BUSHING CENTURION*
12	AFN.00732	VITE M 8X 25 CILINDRICA 5931	*M 8X25 SOCKET HEAD SCREW*
13	AFN.00129	RONDELLA 8,5-17X1,5	*WASHER 8,5-17X1,5*
14	AFN.03623	VITE M 6X 65 SVASATA 5933	*M 6X 65 COUNTERSUNK HEAD SCREW*
15	AFN.00105	RONDELLA 6,5-12X1,5	*WASHER 6,5-12X1,5*
16	SZ0.03199	TUBO 8X1 52 MM TENDICINGHIA CENT	*CENT TUBE 8X1X52 CENTURION*
17	AFN.00264	DADO M 6 AUTOBLOCK ALTO	*NUT M6 HIGH SELF-LOCKING*
18	AFN.01920	VITE M 8X 16 BOMBATA 7380	*M8X16 CONVEX HEAD SCREW*
19	AFN.00287	RONDELLA 8,5-14X1,5	*WASHER 8,5-14X1,5*
20	AFN.00128	DADO M 8 AUTOBLOCK ALTO	*NUT M8 HIGH SELF-LOCKING*
21	AFN.02291	VITE M 8X 60 ESAGONALE 5739	*M 8X 60 HEXAGONAL HEAD SCREW*
22	SZ0.03201	SUPPORTO TENDICINGHIA CENT 2014	*BELT TIGHTENER SUPPORT CENTURION*
23	FM0.03265	RULLO TENDICINGHIA CENT 2014 COMP	*BELT TIGHTENER ROLLER ASSY CENTURION*
24	SZ0.04016	SPESSORE 12-20X7,7 TENDICATENA CENT	*CHAIN TIGHTENER WASHER 12X20X7,7*
25	FM0.04094	PIGNONE TENDICATENA Z16 CENT CUSC.Ø12 COMP	*CHAIN TIGHTENER SPROCKET 16T ASSY CENT*
26	AFS.04784	PATTINO TENDICATENA OVALE Ø12 NOLEGGIO	*OVAL CHAIN SLIDER TENSIONER Ø12*
27	FM0.00576	TENDICATENA COMPLETO GX270-390 CENT 2014	*CENT CHAIN TIGHTNER GX270-390*
28	FM0.06473	RULLO TENDICATENA DELRIN Ø50 CENT COMPL.	*ASSY CHAIN TENSIONING ROLLER Ø50 CENT*
29	SZ0.06475	DISTANZIALE RULLO TENDICATENA DELRIN CENT	*BELT TENSIONER ROLLER SPACER DELRIN CENT*

MODELLO Ø10 - *MODEL Ø 10* - PRIMA DI ORDINARE RICAMBI, VI CONSIGLIAMO DI VERIFICARE IL VOSTRO MODELLO - *BEFORE ORDERING PARTS, WE ADVISE YOU TO CHECK YOUR MODEL*

1	~~SC0.03199~~	~~PIASTRA TENDICINGHIA CENT 2014 Ø10~~	~~*BELT TIGHTENER PLATE CENTURION Ø10*~~
2	AFN.02393	DADO M10 AUTOBLOCK ALTO	*NUT M10 HIGH SELF-LOCKING*
3	AFN.01637	RONDELLA 10,5-20X2	*WASHER 10,5-20X2*
4	AFN.00674	VITE M10X 80 ESAGONALE TUTTO FILETTO 5737	*M10X 80 HEXAGONAL HEAD SCREW*
25	~~FM0.02501~~	~~PIGNONE TENDICATENA Z12 CENT CUSC.Ø10 COMP~~	~~*CHAIN TIGHTENER SPROCKET 12T ASSY CENT*~~

SILENZIATORE – SILENCER

UP TO MAY - 2023

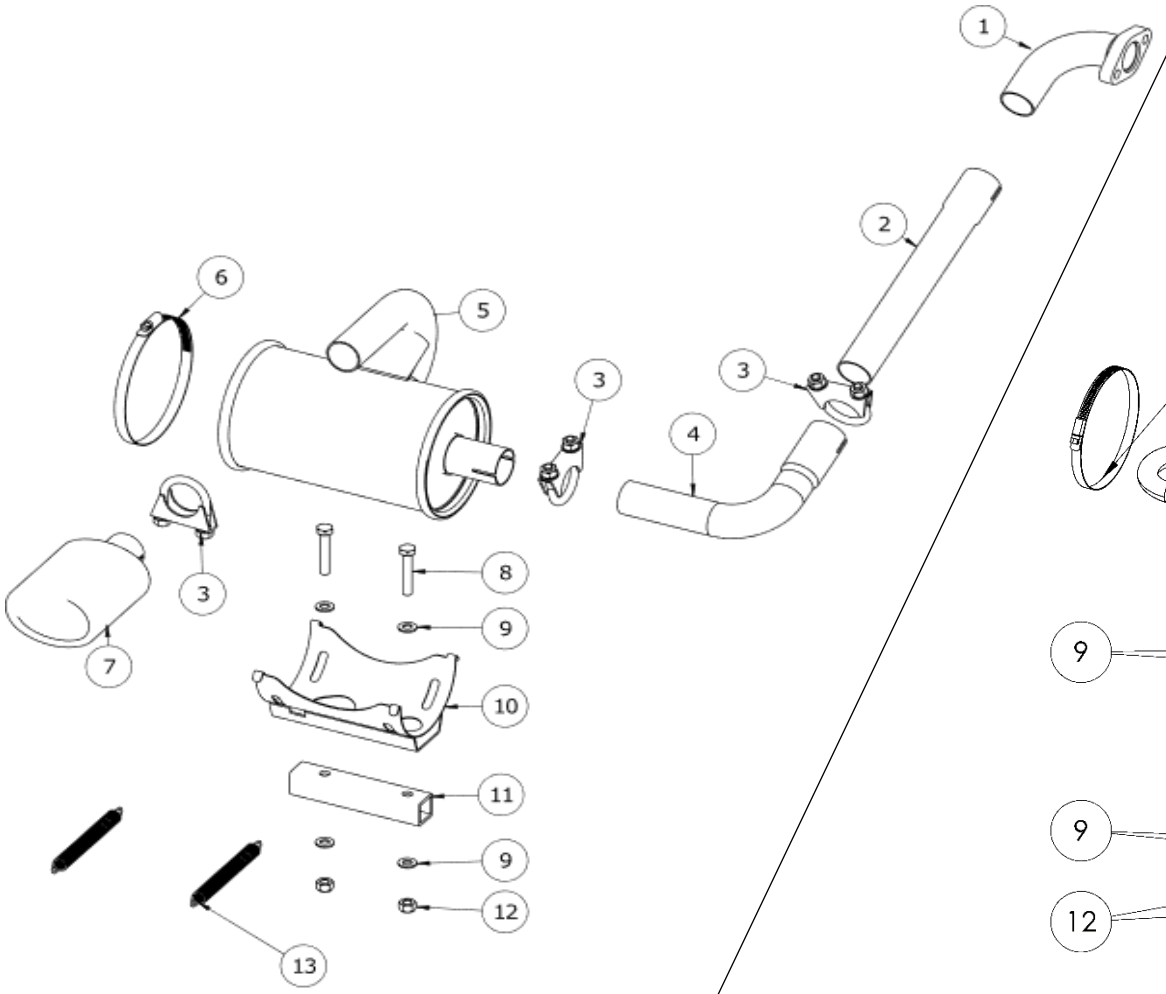

FROM JUNE - 2023

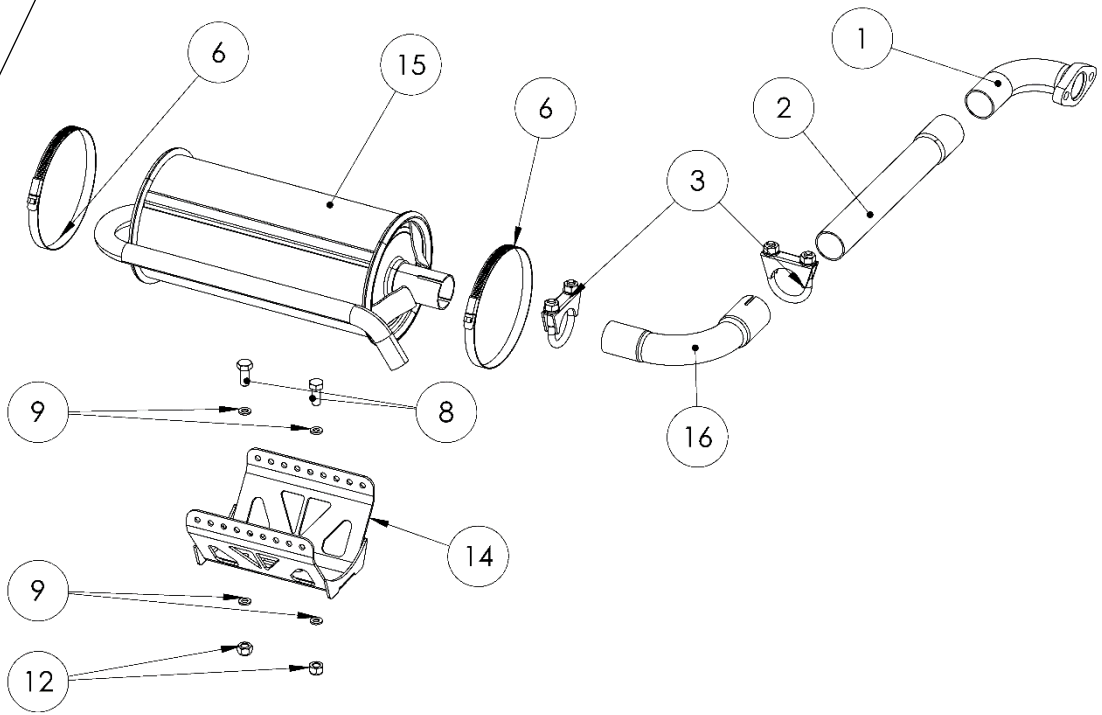

POS.	COD.	DESCRIZIONE	*DESCRIPTION*
1	AFS.03210	COLLETTORE USCITA MOTORE CENT RACING	*CENT RACING SILENCER MANIFOLD*
2	AFS.03211	TUBO GIUNZIONE COLLETTORE/CURVA RACING	*CENT RACING JUNCTION PIPE FOR MANIFOLD*
3	AFS.03215	FASCETTA SILENZIATORE CENT DIAM.35	*CENT SILENCER BAND DIAM.35*
4	AFS.03212	CURVA GIUNZIONE SILENZIATORE RACING INOX	*CENT RACING SILENCER CURVED JUNCT.PIPE*
5	AFS.03709	SILENZIATORE CENT RACING INSONORIZZATO	*CENTURION RACING SILENCER*
6	AFS.03272	FASCETTA SILENZIATORE 120-140 H.12 MM CENT	*TUBE BAND 120-140-10 CENT*
7	AFS.03214	TERMINALE OVALE CENT RACING	*CENT RACING TERMINAL OVAL*
8	AFN.00911	VITE M 8X 45 ESAGONALE 5739	*M 8X45 HEXAGONAL HEAD SCREW*
9	AFN.00350	RONDELLA 8,5-16X1,5	*WASHER 8,5-16X1,5*
10	SC0.03182	CULLA MARMITTA CENT 2014	*EXHAUST SUPPORT CENT*
11	~~SZ0.03273~~	~~SPESSORE SUPPORTO CULLA MARMITTA 25X25~~	~~*EXHAUST CRADLE SUPPORT SPACER 25X25*~~
12	AFN.00286	DADO M 8 METALBLOCK	*NUT M 8 METALBLOCK*
13	SZ0.00122	MOLLA CULLA MARMITTA 10,5 STD	*EXHAUST CRADLE SPRING 10,5 STD*
14	SZ0.06431	CULLA MARMITTA CENT Ø125	*EXHAUST SUPPORT CENT Ø125*
15	AFS.06258	SILENZIATORE CENT RACING XS EXTRA SILENCER	*CENTURION RACING SILENCER 2.0*
16	AFS.04087	CURVA GIUNZIONE SILENZIATORE XS + MINI INOX	*CENT EXHAUST MANIFOLD JUNCTION PIPE*

CARENA MOTORE – ENGINE FAIRING

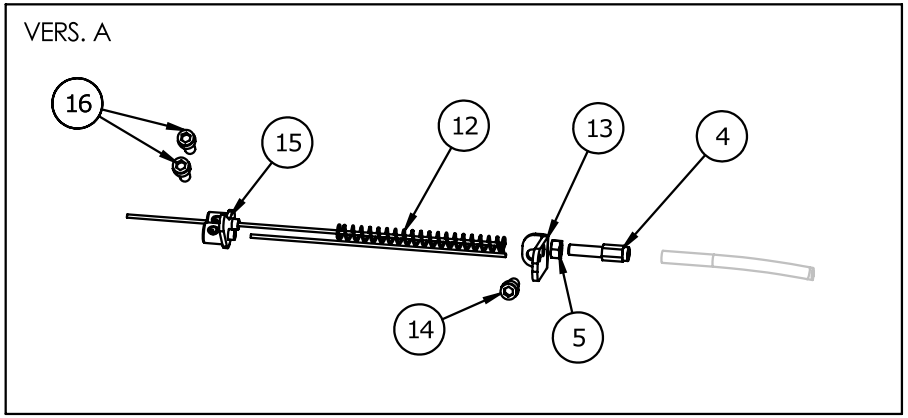

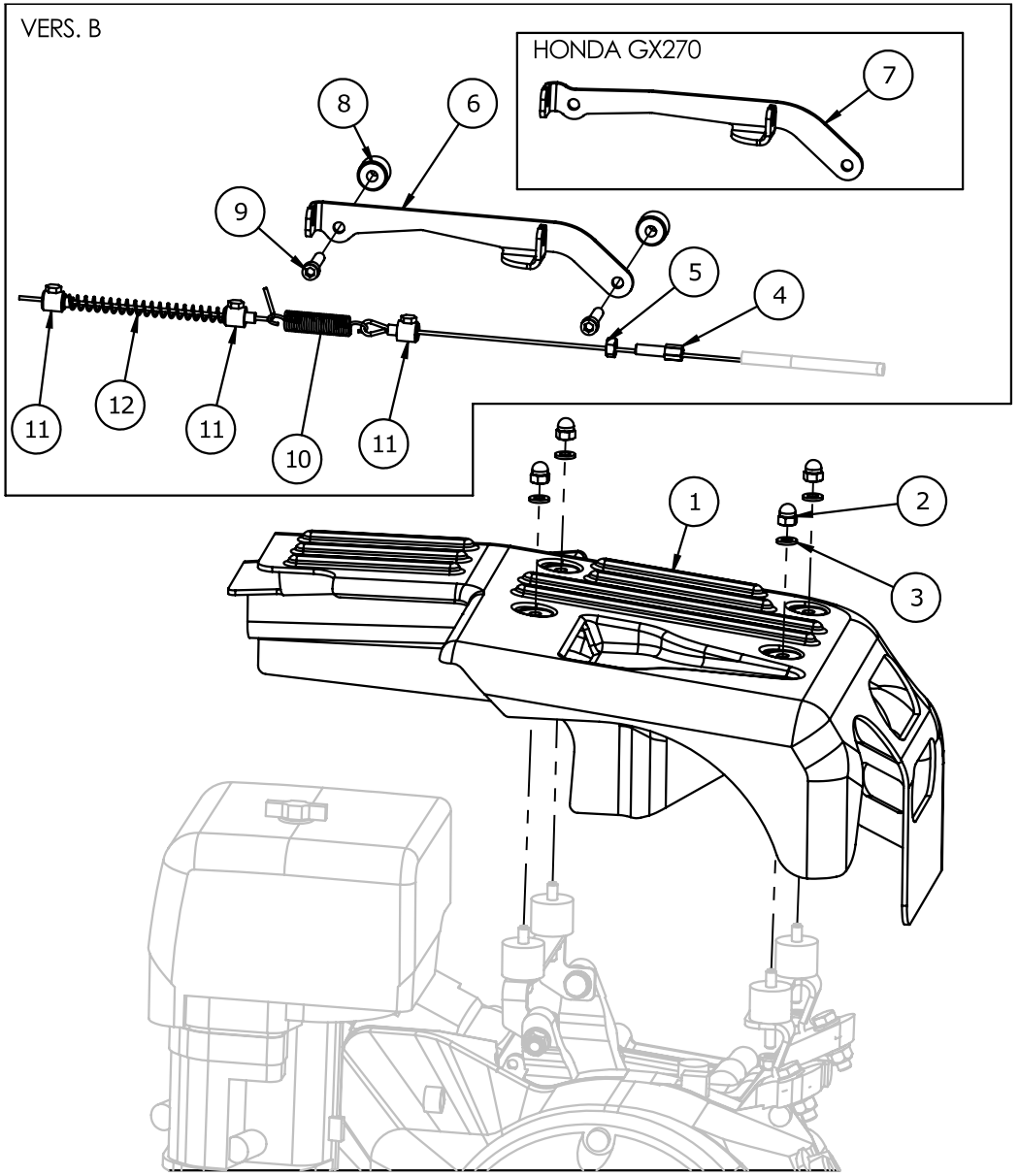

POS.	COD.	DESCRIZIONE	*DESCRIPTION*
1	AFS.02169	CARENA MOTORE CENTURION	*ENGINE COVER CENT*
2	SBN.02376	DADO M 6 CIECO ZINCATO CENT	*BLIND NUT M 6 BLACK CENT*
3	AFN.00263	RONDELLA 6,5-18X1,6	*WASHER 6,5-18X1,6*
4	SZ0.00390	REGISTRO FILO M6	*CABLE ADJUSTER M6*
5	AFN.00093	DADO M 6	*NUT M 6*
6	SZ0.04922	SUPPORTO REGISTRO CAVO ACCELERATORE CENT	*ACCELERATION CABLE ADJUSTER SUPPORT CENT*
7	SZ0.04921	SUPPORTO REGISTRO CAVO ACCELERATORE GX270	*ACCELERATION CABLE ADJUSTER SUPPORT GX270*
8	FAN.00355	SPESSORE 6,5-18X14 FRONTALINO NERO	*SPACER 6,5-18X14 FRONT FAIRING BLACK*
9	AFN.00281	VITE M 6X 30 CILINDRICA 5931	*M 6X30 SOCKET HEAD SCREW*
10	SZ0.02203	MOLLA PEDALE CENT GAS	*PEDAL SPRING GAS/EXHAUST CENT*
11	AFS.00514	MORSETTO FILO RR	*CABLE CLAMP*
12	SZ0.02201	MOLLA RITORNO CARBURATORE CENT	*CARBURETTOR RECOVERY SPRING CENT*
13	SZ0.02093	SUPPORTO REGISTRO GAS CENT	*GAS CABLE SUPPORT CENT*
14	AFN.02546	VITE M 6X 14 CILINDRICA 5931	*M 6X 14 SOCKET HEAD SCREW*
15	SZ0.02094	PIASTRINA FILO GAS CENT	*CABLE GAS PLATE CENT*
16	AFN.01585	VITE M 6X 16 CILINDRICA 5931	*M6X16 SOCKET HEAD SCREW*


CRG
CE
karterg.com

POS.	COD.	DESCRIZIONE	*DESCRIPTION*
1	AFS.06631	KIT ADESIVI CENTURION 2024 COMPL.	*CENTURION STICKERS KIT COMPLETE*

TUTA KART E CASCO – RACING SUIT AND HELMET



POS.	COD.	DESCRIZIONE	*DESCRIPTION*
1	XXX.XXXX	TUTA KART CRG-SPARCO	CRG-SPARCO RACING SUIT
2	XXX.XXXX	CASCO INTEGRALE CON VISIERA	FULL FACE HELMET WITH VISOR
3	XXX.XXXX	CASCO APERTO	OPEN HELMET

OPTIONAL PINZA FRENO ANTERIORE – OPTIONAL FRONT BRAKE CALIPER

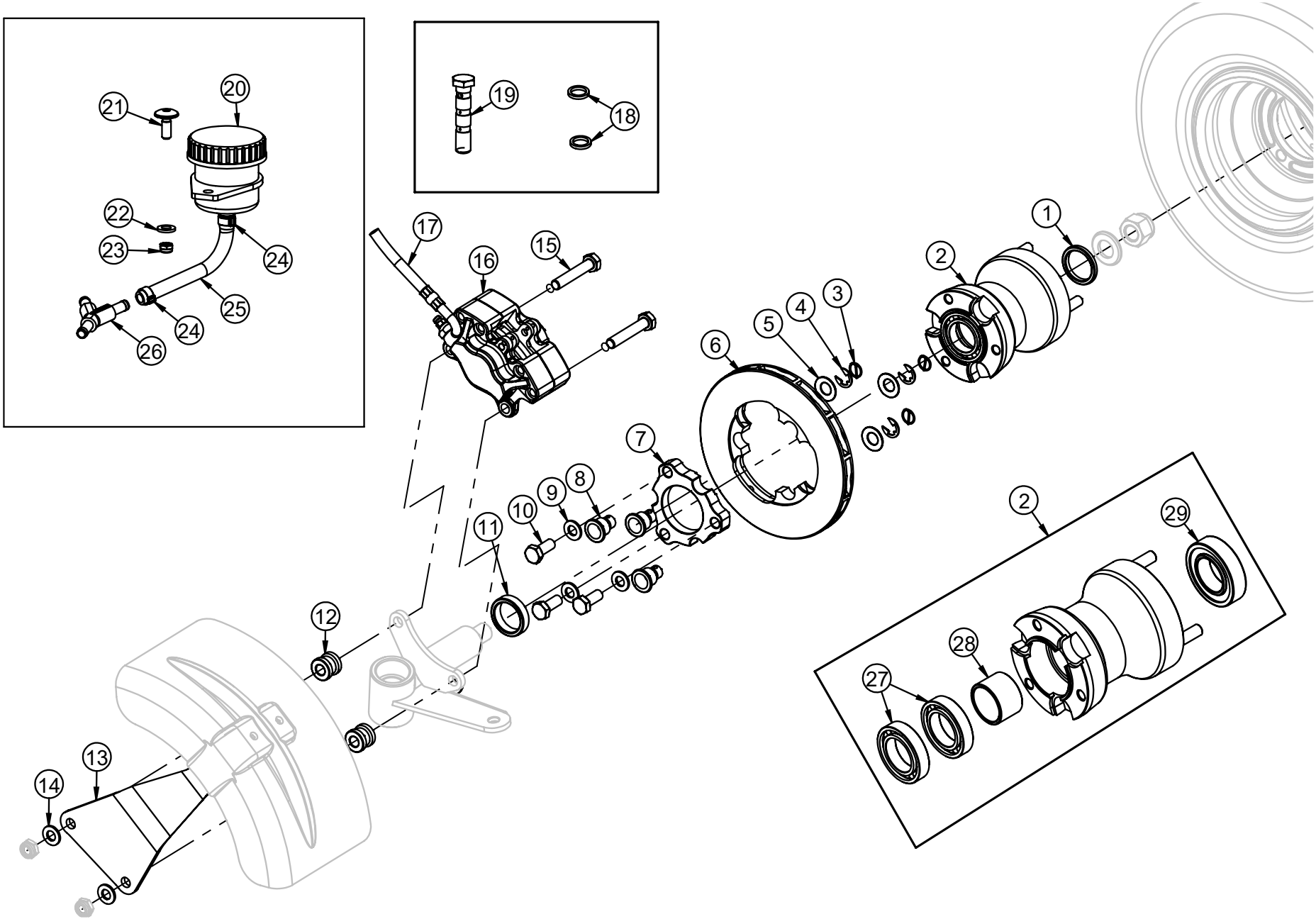

OPTIONAL PINZA FRENO ANTERIORE – OPTIONAL FRONT BRAKE CALIPER

POS.	COD.	DESCRIZIONE	*DESCRIPTION*
1	FAN.01738	DISTANZIALE PERNO FUSELLO 25 NERO 4MM	*STUB AXLE SPACER 25 4MM BLACK*
2	FM0.02949	MOZZO ANTERIORE PER DISCO FRENO CENT COMPL.	*FRONT WHEEL HUB CENTURION*
3	AFS.00232	SPINA ELASTICA D10 DISCO FRENO	*ELASTIC PIN Ø10 BRAKE DISC*
4	AFN.00231	SEEGER D 8 DISCO FRENO	*SEEGER D8 BRAKE DISC*
5	AFN.01677	RONDELLA DISCO FRENO ELASTICA POST Ø10-23	*BRAKE DISC ELASTIC WASHER V11*
6	SL2.01731	DISCO FRENO ANTERIORE AUTOVENTILATO CENT	*FRONT BRAKE DISC CENT VENTILATED*
7	SZ0.02140	FLANGIA DISCO AUTOVENTILATO CENT	*PULLEY FLANGE CENT*
8	SBN.00372	BUSSOLA DISCO FRENO ANTERIORE	*FRONT BRAKE DISC BUSH*
9	AFN.00129	RONDELLA 8,5-17X1,5	*WASHER 8,5-17X1,5*
10	AFN.00316	VITE M 8X 22 ESAGONALE 5739	*M 8X22 HEXAGONAL HEAD SCREW*
11	FAN.01739	DISTANZIALE PERNO FUSELLO 25 NERO 8MM	*STUB AXLE SPACER 25 8MM BLACK*
12	FAN.01074	SPESSORE PINZA 8,5X18X16 MINI NERO	*CALIPER SPACER 8,5X16X16 MINI*
13	SC0.1272D	SUPPORTO PARAFANGO FRENO ANT. CENT CROM DX	*FENDER SUPPORT RH FRONT BRAKE SYS CENT*
	SC0.1272S	SUPPORTO PARAFANGO FRENO ANT. CENT CROM SX	*FENDER SUPPORT LF FRONT BRAKE SYS CENT*
14	AFN.00133	RONDELLA 8,5-14X1	*8,5-14X1 WASHER*
15	AFN.00911	VITE M 8X 45 ESAGONALE 5739	*M 8X45 HEXAGONAL HEAD SCREW*
16	FM0.0363D	PINZA ANTERIORE V09/V11 ROSSA G DX NERO COMPL.	*FRONT BRAKE CALIPER V09/V11 IRON RH COMPL*
	FM0.0363S	PINZA ANTERIORE V09/V11 ROSSA G SX NERO COMPL.	*FRONT BRAKE CALIPER V09/V11 IRON LF COMPL*
17	AFS.00937	TUBO FRENO OCCHIELLO MM1000 ROSSO ANT CENT	*BFLASH FRONT BRAKE PIPE 1000MM*
18	AFN.00186	RONDELLA 10,5-14X2 RAME	*COPPER WASHER 10,5-14X2*
19	SZ0.02757	RACCORDO TRIPLO FRENO ANTERIORE CENT	*TRIPLE FITTING X FRONT BRAKE TUBE CENT*
20	AFS.05309	SERBATOIO OLIO FRENI C/TAPPO CENTURION 45CC	*CENTURION BRAKE FLUID TANK WITH CAP*
21		VITE TESTA TONDA LARGA M 6X 16 PIANALE	*FLOOR TRAY SCREW LARGE ROUND HEAD M6X16*
22	AFN.00263	RONDELLA 6,5-18X1,6	*WASHER 6,5-18X1,6*
23	AFN.00106	DADO M 6 AUTOBLOCK BASSO	*NUT M6 LOW SELF-LOCKING*
24	AFS.02309	FASCETTA TUBAZIONE TANICA 9-11 A CRIMPARE	*FUEL TANK PIPE BAND*
25	AMS.00139	TUBO BENZINA AL METRO	*FUEL PIPE PER METER*
26	AFS.01981	RACCORDO Y FESTO 6MM	*Y-FITTING FESTO 6MM*
27	AFN.01750	CUSCINETTO 61905 ZZ MOZZO ANT. D25	*BEARING FRONT HUB Ø25*
28	SZ0.02140	FLANGIA DISCO AUTOVENTILATO CENT	*PULLEY FLANGE CENT*
29	SBN.00372	BUSSOLA DISCO FRENO ANTERIORE	*FRONT BRAKE DISC BUSH*

PINZA FRENO ANTERIORE – FRONT BRAKE CALIPER

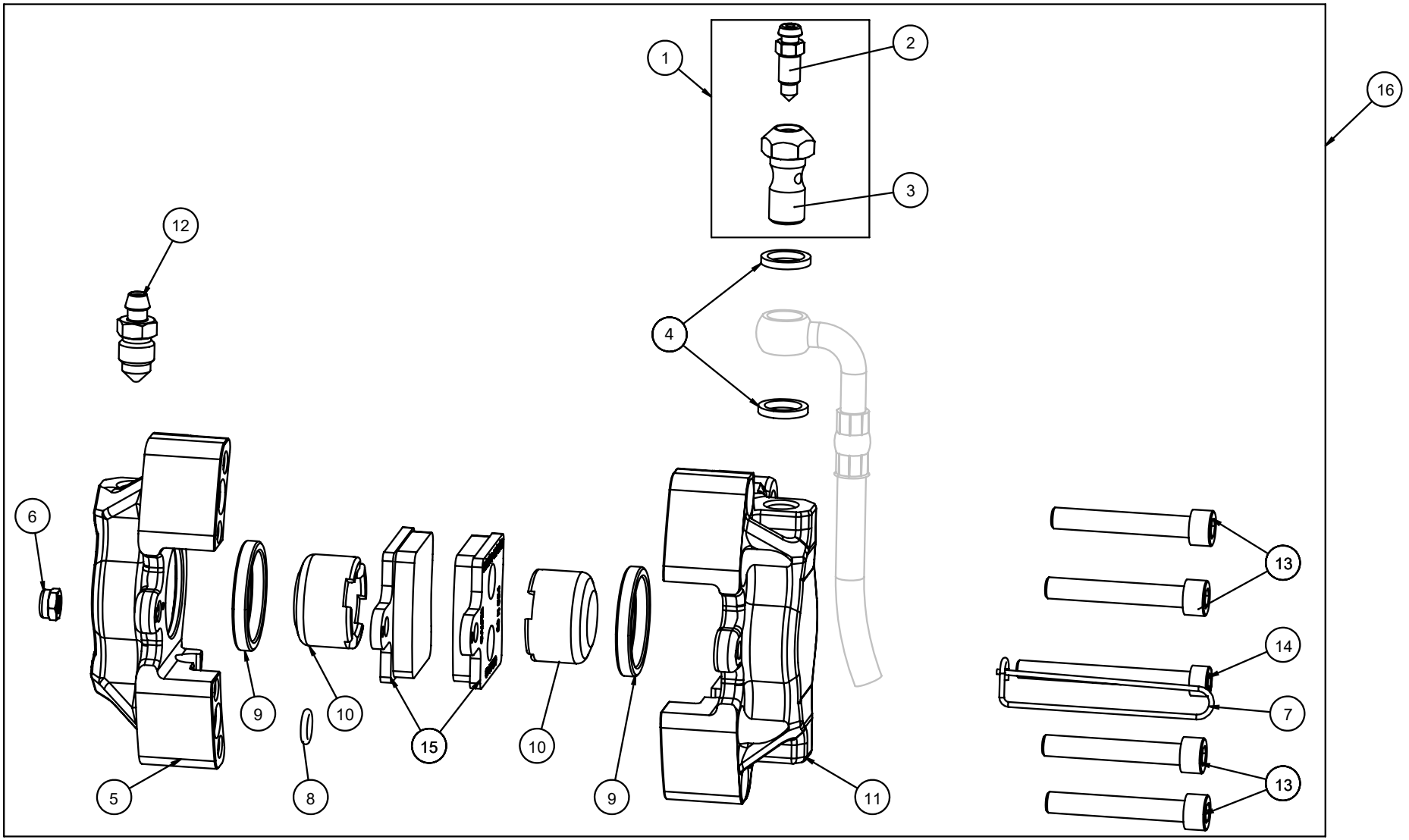

POS.	COD.	DESCRIZIONE	*DESCRIPTION*
1	FM0.00308	RACCORDO COMBINATO COMPLETO	*BLEEDER FITTING COMPLETE*
2	SZ0.00309	SPURGO M 6 V11	*BLEEDER M6 V11*
3	SZ0.00308	RACCORDO COMBINATO M10	*BLEEDER FITTING M10*
4	AFN.00186	RONDELLA 10,5-14X2 RAME	*COPPER WASHER 10,5-14X2*
5	SDN.0365D	SEMI PINZA ANT.V11 C/ORECCHIE DX NERA	*FRONT HALF CALIPER V11 RIGHT WITH FITTINGS*
	SDN.0364D	SEMI PINZA ANT.V11 DX NERA	*HALF CALIPER V11 FRONT RIGHT BLACK*
6	AFN.00360	DADO M 5 AUTOBLOCK BASSO	*NUT M 5 LOW SELF-LOCKING*
7	AFS.00187	SPINA SICUREZZA ANT.V11	*FRONT SAFETY PIN V11*
8	AFN.03814	OR PINZA 5 X 2 V11 ANTERIORE	*FRONT O-RING CALIPER 5X2 V11*
9	AFS.00179	GOMMINO PINZA ANTERIORE Ø26 V11	*PISTON SEAL FRONT D26 V11*
10	SD1.00370	PISTONCINO PINZA V11 ANT(EX UP-V04)	*V11 FRONT BRAKE CALIPER PISTON*
11	SDN.0365S	SEMI PINZA ANT.V11 C/ORECCHIE SX NERA	*FRONT HALF CALIPER V11 LEFT*
	SDN.0364S	SEMI PINZA ANT.V11 SX NERA	*HALF CALIPER V11 FRONT LEFT BLACK*
12	SZ0.00184	SPURGO M10 V11	*BLEEDER M10 V11*
13	AFN.00368	VITE M 6X 40 CILINDRICA 5931	*M 6X40 SOCKET HEAD SCREW*
14	AFN.00367	VITE M 5X 55 CILINDRICA 5931	*M 5X55 SOCKET HEAD SCREW*
15	FM0.0363D	PINZA ANTERIORE V09/V11 ROSSA G DX NERO COMPL.	*FRONT BRAKE CALIPER V09/V11 IRON RH COMPL*
16	FM0.0363S	PINZA ANTERIORE V09/V11 ROSSA G SX NERO COMPL.	*FRONT BRAKE CALIPER V09/V11 IRON LF COMPL*

OPTIONAL REGOLAZIONE VOLANTE – OPTIONAL ADJUSTMENT STEERING WHEEL

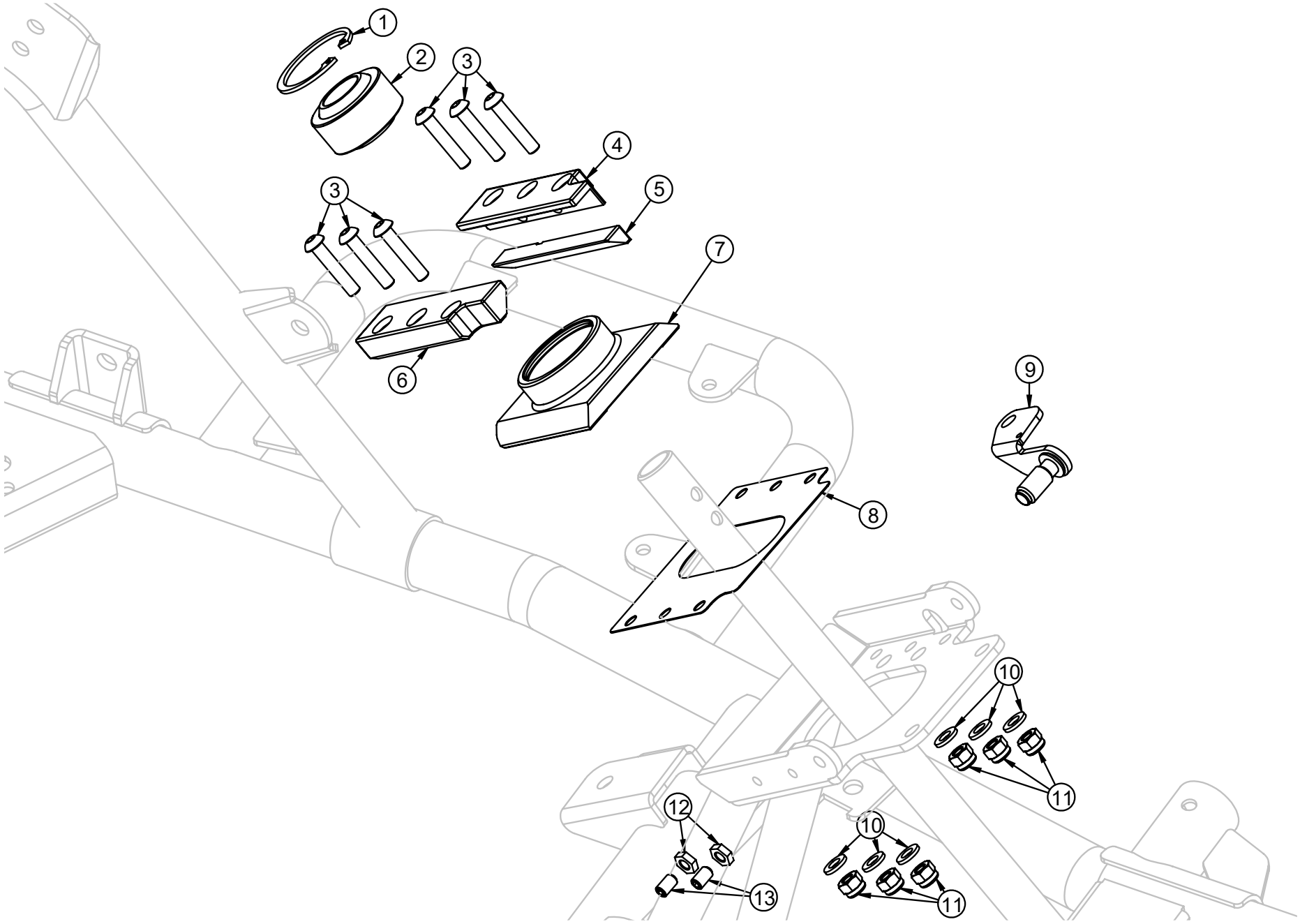

POS.	COD.	DESCRIZIONE	*DESCRIPTION*
1	AFS.02625	SEEGER D35 SNODO CENTURION	*SEEGER D40*
2	AFS.02626	SNODO D20 CENTURION	*CENTURION BALL JOINT D20*
3	AFN.01917	VITE M 6X 25 BOMBATA 7380	*M 6X 25 CONVEX HEAD SCREW*
4	SZ0.2586S	PARTE FIX SX SUPPORTO SNODO D20 CENT	*FIX BODY LF FOR JOINT SUPPORT CENT*
5	SZ0.02592	FERMO SUPPORTO SNODO CENTURION	*JOINT SUPPORT BAR CENTURION*
6	SZ0.2586D	PARTE FIX DX SUPPORTO SNODO D20 CENT	*FIX BODY RH FOR JOINT SUPPORT CENT*
7	SDN.02586	SUPPORTO SNODO D20 CENTURION	*CENTURION BALL JOINT SUPPORT D20*
8	AML.02556	SPESSORE INOX 0,5 CENTURION	*CENT INOX SPACER 0,5*
9	SZ0.02557	MANOPOLA FERMO SUPPORTO SNODO CENTURION	*JOINT SUPPORT KNOB CENTURION*
10	AFN.00105	RONDELLA 6,5-12X1,5	*WASHER 6,5-12X1,5*
11	AFN.00106	DADO M 6 AUTOBLOCK BASSO	*NUT M6 LOW SELF-LOCKING*
12	AFN.00093	DADO M 6	*NUT M 6*
13	AFN.00357	GRANO M 6X10 (PIANTONE-POMPA V06)	*GRUB SCREW M6X10*

OPTIONAL TRANSPONDER

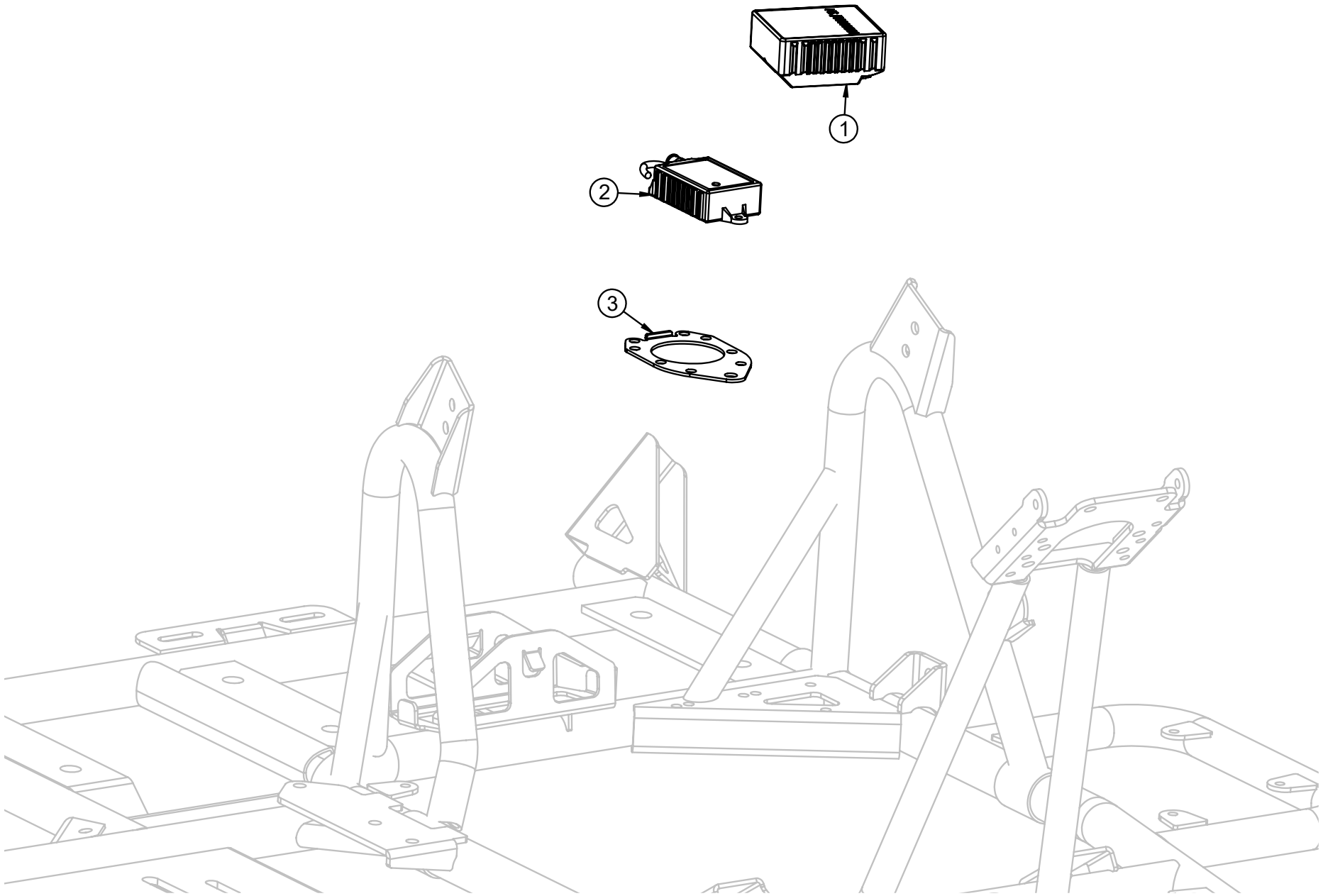

POS.	COD.	DESCRIZIONE	*DESCRIPTION*
1	AFS.04047	XTRA SENSORE LAP TIME PER KART	*XTRA SECTOR SENSOR*
2	AFS.04042	XTRA CDI TRANSPONDER SPEGNIMENTO	*XTRA CDI SHUTDOWN TRANSPONDER*
3	SZ0.02814	SUPPORTO CENTRALINA MINI	*MINI COIL SUPPORT*
		ACCESSORI CONTROLLO PER LA PISTA – *TRACK TOOLS CONTROL ACCESSORIES*	
	AFS.04040	XTRA UNITÀ DI CONTROLLO REMOTO GRANDE	*XTRA REMOTE CONTROL UNIT INCLUDING COVER*
	AFS.04041	XTRA UNITÀ DI CONTROLLO REMOTO PICCOLA	*XTRA MINI REMOTE CONTROL*
	AFS.04045	XTRA PULSANTE STOP DI EMERGENZA	*XTRA EMERGENCY STOP BUTTON*
		ACCESSORI LAP TIME PER LA PISTA – *TRACK LAP TIME ACCESSORIES*	
	AFS.04046	XTRA LETTORE LAP TIME PER PISTA	*XTRA SECTOR BEACON*
	AFS.04048	XTRA RANGE EXTENDER/ACCESS POINT	*XTRA RANGE EXTENDER/ACCESS POINT*
	AFS.04049	XTRA LUCE DI CONTROLLO RANGE EXTENDER/ACCESS POINT	*XTRA LIGHT CONTROL BOARD FOR RANGE EXTENDER/ACCESS POINT*
	AFS.04050	XTRA TRACK MANAGER	*XTRA TRACK MANAGER*
	AFS.04130	XTRA TIMING HOST	*XTRA TIMING HOST*

OPTIONAL AVVIAMENTO ELETTRICO PER GX270 – OPTIONAL GX270 ELECTRIC STARTER

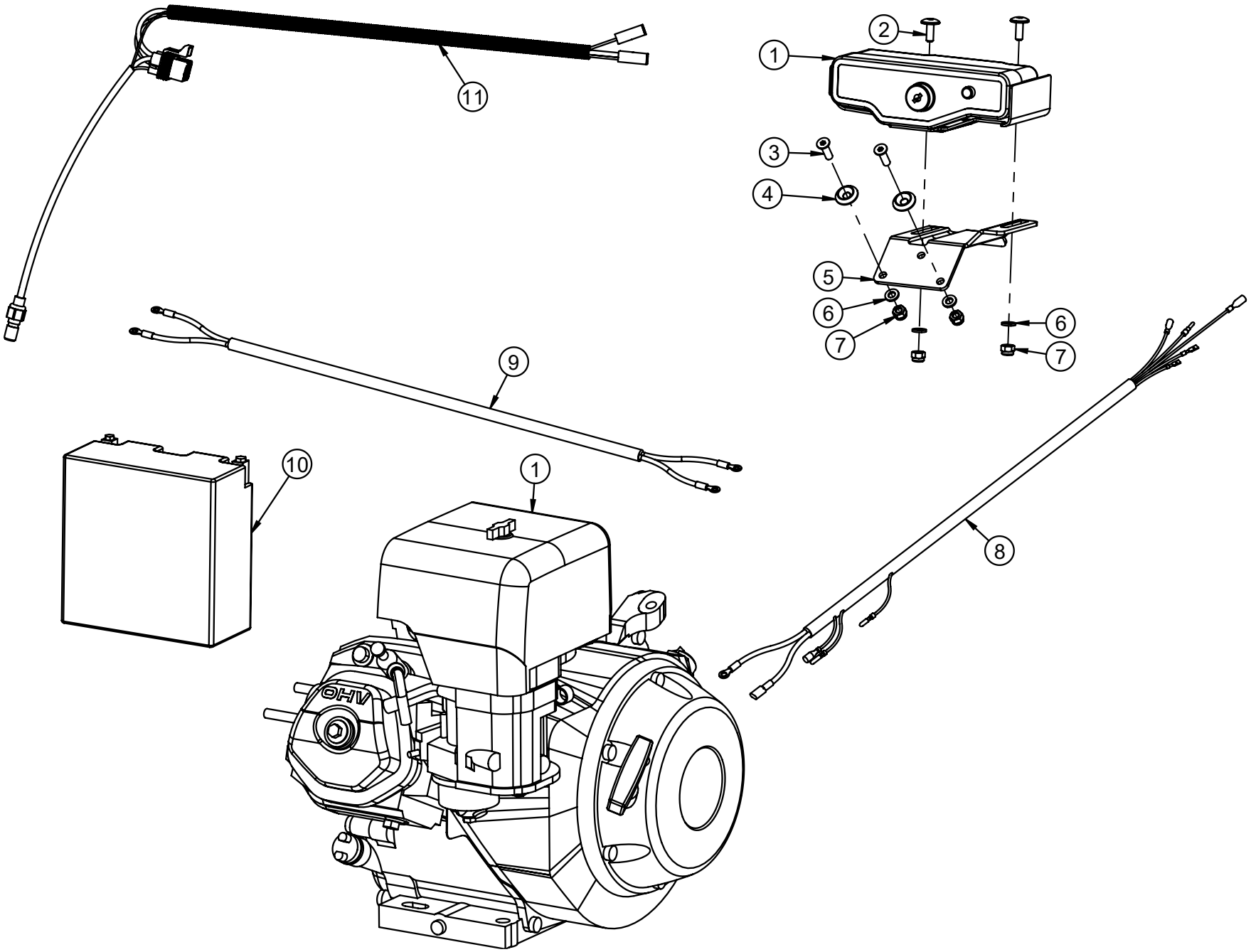

OPTIONAL AVVIAMENTO ELETTRICO PER GX270 – OPTIONAL GX270 ELECTRIC STARTER

POS.	COD.	DESCRIZIONE	*DESCRIPTION*
1	AFS.03018	MOTORE HONDA GX270 AVVIAMENTO ELETTRICO RH-E5	*HONDA ENGINE GX270 ELECT.STARTER*
2	AFS.00261	VITE TESTA TONDA LARGA M 6X 16 PIANALE	*FLOOR TRAY SCREW LARGE ROUND HEAD M6X16*
3	AFN.00261	VITE M 6X 20 SVASATA 5933	*M6X20 COUNTERSUNK HEAD SCREW*
4	SAN.00249	RONDELLA 6 SVASATA NERA	*WASHER 6 COUNTERSUNK BLACK*
5	SZ0.03151	PIASTRA ATTACCO START ELETTRICO	*CONNECTION PLATE FOR ELECT.START*
6	AFN.00105	RONDELLA 6,5-12X1,5	*WASHER 6,5-12X1,5*
7	AFN.00264	DADO M 6 AUTOBLOCK ALTO	*NUT M6 HIGH SELF-LOCKING*
8	CABEL.001	CABLAGGIO MOTORE/COMANDI AV.ELET.CENT	*CABEL SYSTEM ASSY ENGINE/CONSOLE E.START*
9	CABEL.002	CABLAGGIO MOTORE/BATTERIA AV.ELET.CENT	*CABEL SYSTEM ASSY ENGINE/BATTERY E.START*
10	AFS.01601	BATTERIA CENT 12V-14 AH AVV.ELETTRICO	*CENT ELECT.STARTER BATTERY 12V-14 AH*
11	FL1.04002	CABLAGGIO RACCORDO IDROSTOP CENT MOD. CON INTER.	*CENTURION IDRO STOP FITTING MODEL WITH SWITCH*

OPTIONAL MOTORE HONDA GX390 – OPTIONAL HONDA ENGINE GX390

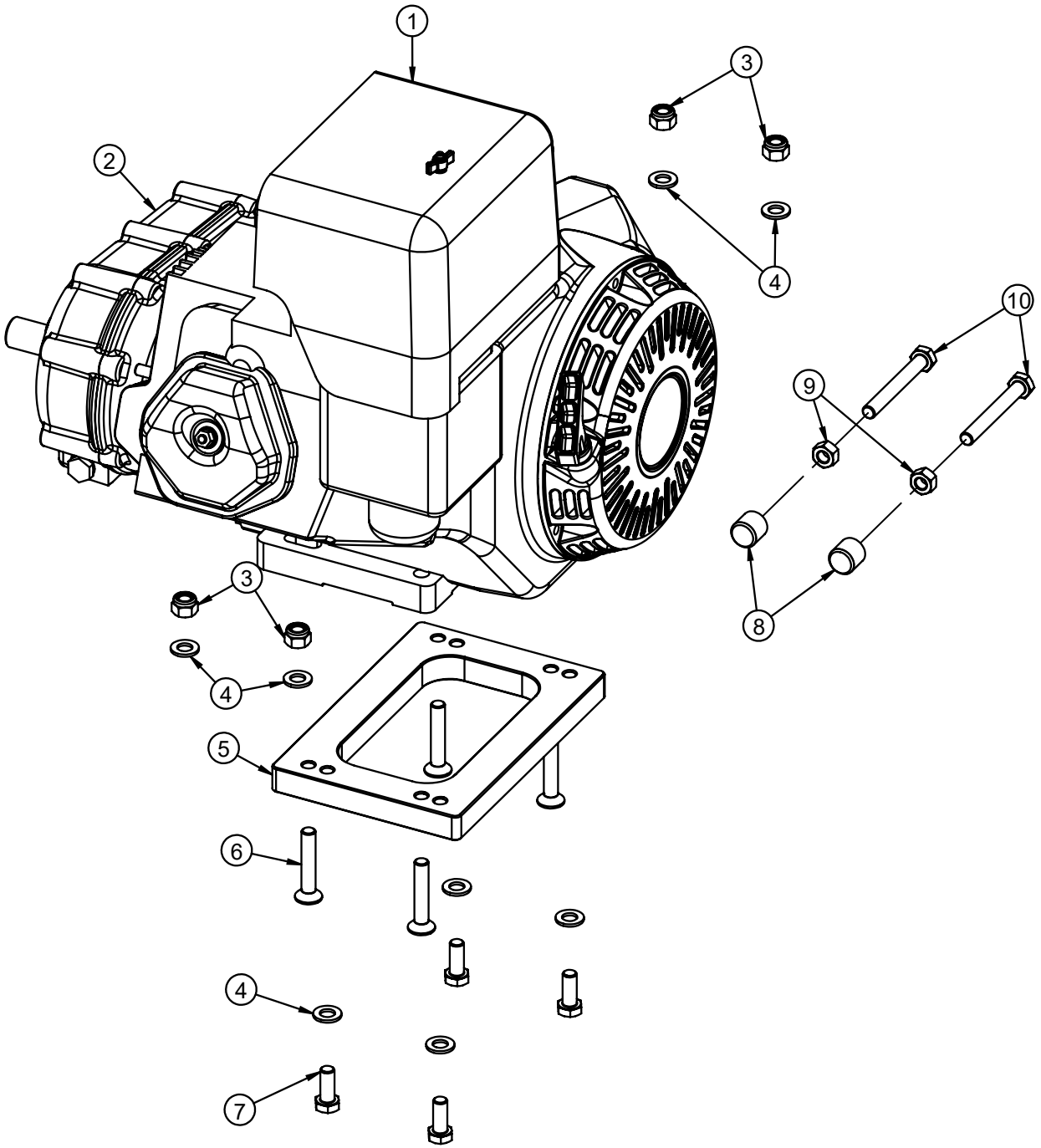

POS.	COD.	DESCRIZIONE	*DESCRIPTION*
1	AFS.01451	MOTORE HONDA GX390 SD-Q5-OH	*HONDA GX390 SD Q5 ENGINE*
2	AFS.05316	NORAM*RIDUTTORE XO 2:1 PER MOTORE GX390	*GEARBOX XO 2:1 REDUCTION WET CLUTCH*
3	AFN.02393	DADO M10 AUTOBLOCK ALTO	*NUT M10 HIGH SELF-LOCKING*
4	SZ0.02400	RONDELLA 10,5-28X4 MOTORE-TEND. CENT	*WASHER SPACER 10,5-28X4,5 CENT*
5	FL1.03508	PIASTRA MOTORE GX390 X RIDUTTORE NORAM	*GX390 ENGINE MOUNT*
6	AFN.05661	VITE M10X 60 SVASATA 5933	*M10X 60 COUNTERSUNK HEAD SCREW*
7	AFN.02845	VITE M10X 25 ESAGONALE 5739	*M10X25 HEXAGONAL HEAD SCREW*
8	FL1.03191	PUNTALE PLASTICA TENDIMOTORE CENT	*PLASTIC PIVOT FOR ENGINE TIGHTENER CENT*
9	AFN.00255	DADO M10	*NUT M10*
10	AFN.00674	VITE M10X 80 ESAGONALE TUTTO FILETTO 5737	*M10X 80 HEXAGONAL HEAD SCREW*

OPTIONAL PROTEZIONE MOTORE – OPTIONAL ENGINE PROTECTION BAR

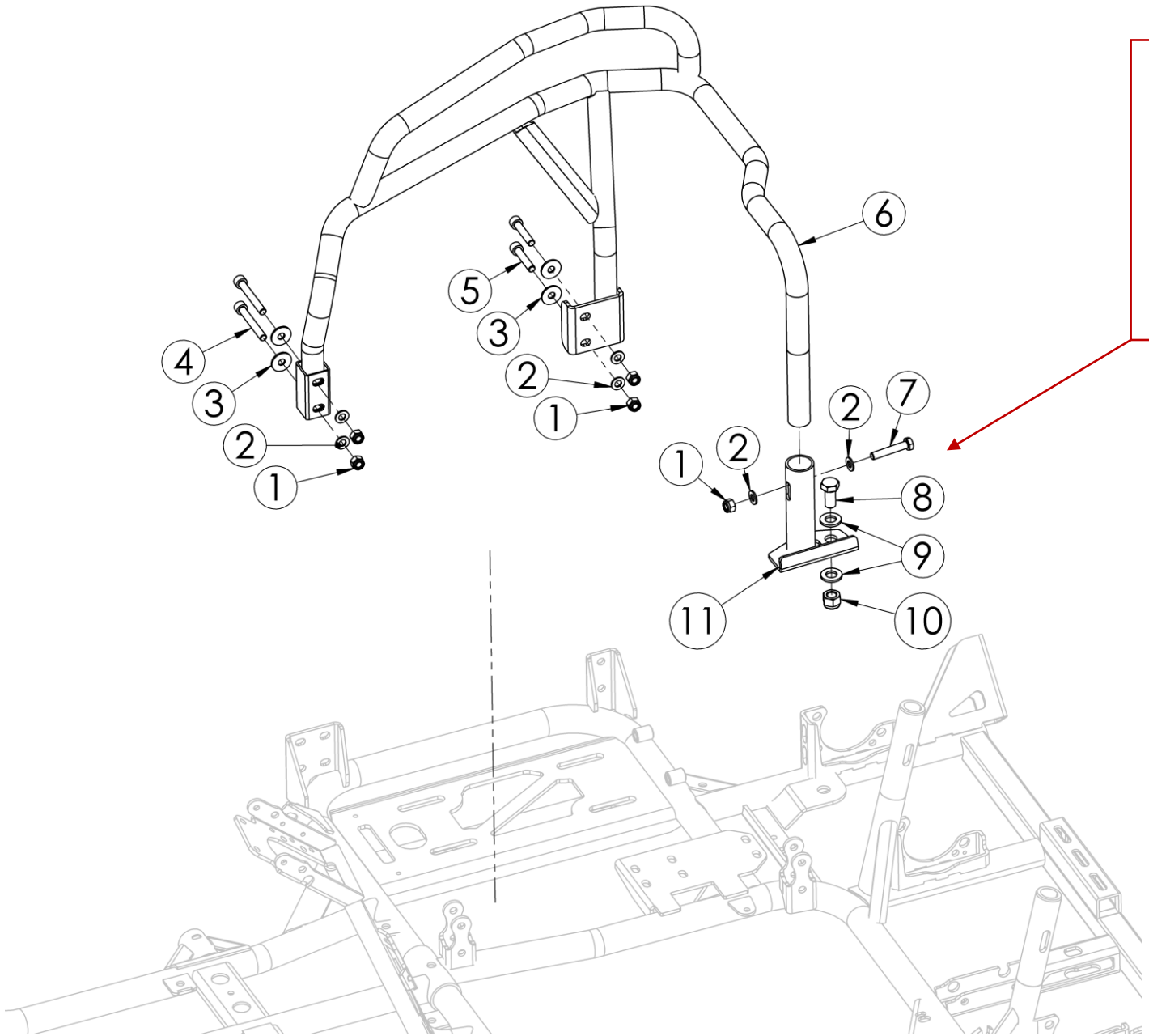

Modelli ≤ 2025: sostituire ⑪ con ⑫
Models ≤ 2025: replace ⑪ with ⑫

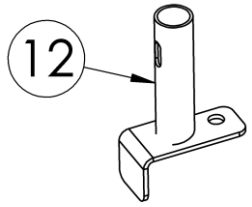

POS.	COD.	DESCRIZIONE	*DESCRIPTION*
1	AFN.00128	DADO M 8 AUTOBLOCK ALTO	NUT M8 HIGH SELF-LOCKING
2	AFN.00350	RONDELLA 8,5-16X1,5	*WASHER 8,5-16X1,5*
3	AFN.02415	RONDELLA 8,5-24X2	*8,5-24X2 WASHER*
4	AFN.02311	VITE M 8X 60 CILINDRICA 5931	*M8X60 SOCKET HEAD SCREW*
5	AFN.00132	VITE M 8X 40 CILINDRICA 5931	*M8X40 SOCKET HEAD SCREW*
6	FVO.05052	PROTEZIONE MOTORE CENT NERO	*CENT BLACK ENGINE PROTECTION BAR*
7	AFN.00911	VITE M 8X 45 ESAGONALE 5739	*M 8X45 HEXAGONAL HEAD SCREW*
8	AFN.05389	VITE M12X 20 ESAGONALE ZINC. 5739	*M12X20 HEXAGONAL HEAD SCREW*
9	AFN.03560	RONDELLA 12 -20X2 ZINCATA	*WASHER 12 -20X2*
10	AFN.02364	DADO M12 AUTOBLOCK ALTO	*M12 HIGH SELF-LOCKING NUT*
11	FVO.0630802	BOCCOLA+PIASTRINA PROTEZIONE MOTORE CENT N.O. 2026	*SLEEVE + MOUNTING PLATE 2026 CENT ENGINE PROTECTION*
12	FVO.06308	BOCCOLA+PIASTRINA PROTEZIONE MOTORE CENT NERO	*SLEEVE + MOUNTING PLATE CENT ENGINE PROTECTION*

OPTIONAL RIDUZIONE SEDILE IN GOMMA – OPTIONAL RUBBER SEAT REDUCTION





OPTIONAL RIDUZIONE SEDILE IN GOMMA – OPTIONAL RUBBER SEAT REDUCTION

POS.	COD.	DESCRIZIONE	*DESCRIPTION*
1	AFS.00746	RIDUZIONE SEDILE CENTURION	*ADJUSTABLE RUBBER SEAT CENT*

OPTIONAL SEDILE REGOLABILE – OPTIONAL ADJUSTABLE SEAT

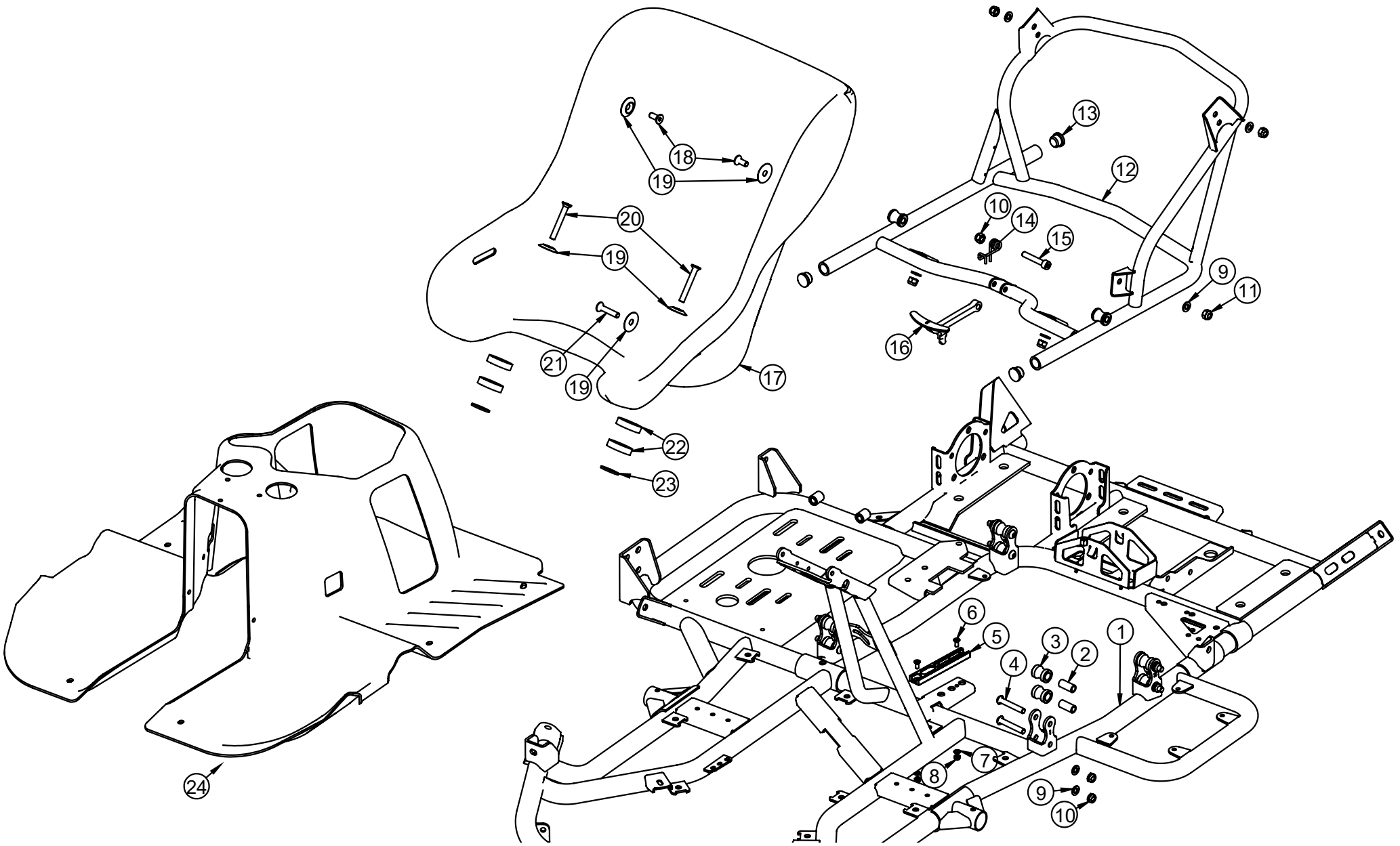

POS.	COD.	DESCRIZIONE	*DESCRIPTION*
1	FVN.03664	SCOCCA CENTURION 2014 SED.REG. NERA (PINZA VECCH.)	*BLACK FRAME CENTURION ADJUSTABLE SEAT SMALL CALIPER*
2	SZ0.03580	DISTANZIALE RULLO CARRELLO SEDILE CENT	*SEAT TROLLEY ROLLER SPACER*
3	FL1.03565	RULLINO GUIDA CARRELLO SEDILE CENT	*SEAT TROLLEY ROLLER*
4	AFN.02098	VITE M 8X 45 BOMBATA 7380	*M 8X45 CONVEX HEAD SCREW*
5	SZ0.03483	CORPO FISSAGGIO SEDILE CENT	*POSITIONER SEAT TROLLEY*
6	AFN.00711	VITE M 5X 10 SVASATA 5933	*M5X10 COUNTERSUNK HEAD SCREW*
7	AFN.02264	RONDELLA 5,3-10X1	*WASHER 5,3-10X1*
8	AFN.02176	DADO M 5 AUTOBLOCK ALTO	*M5 HIGH SELF-LOCKING NUT*
9	AFN.00350	RONDELLA 8,5-16X1,5	*WASHER 8,5-16X1,5*
10	AFN.00160	DADO M 8 AUTOBLOCK BASSO	*NUT M8 LOW SELF-LOCKING*
11	AFN.00128	DADO M 8 AUTOBLOCK ALTO	*NUT M8 HIGH SELF-LOCKING*
12	SC0.03569	CARRELLO SEDILE CENT STANDARD	*CENTURION SEAT TROLLEY*
13	AFS.01119	TAPPINO SUPPORTO MARMITTA CRG/ROTAX	*EXHAUST SUPPORT CAP CRG/ROTAX*
14	SZ0.03605	MOLLA FIX CARRELLO SEDILE CENT ZINC	*CENTURION SEAT TROLLEY SPRING*
15	AFN.00159	VITE M 8X 45 CILINDRICA 5931	*M 8X45 SOCKET HEAD SCREW*
16	SC0.03576	LEVA FISSAGGIO CARRELLO SEDILE CENT	*CENTURION SEAT TROLLEY LEVER*
17	AFS.02867	SEDILE IN PLASTICA SP.7 CENTURION	*CENTURION SP 7MM PLASTIC SEAT*
18	AFN.00145	VITE M 8X 25 SVASATA 5933	*M8X25 COUNTERSUNK HEAD SCREW*
19	FAN.00260	RONDELLA 8 SEDILE ALL.NERA	*ALUMINUM SEAT WASHER BLACK 8*
20	AFN.00912	VITE M 8X 50 SVASATA 5933	*M 8X50 COUNTERSUNK HEAD SCREW*
21	AFN.00533	VITE M 8X 30 SVASATA 5933	*M 8X30 COUNTERSUNK HEAD SCREW*
22	AFS.04662	SPESSORE SEDILE 10-27X14 IN NYLON	*SEAT LINING 10-27X14 NYLON*
23	AFN.00125	RONDELLA 10,5-30X2,5	*WASHER 10,5-30X2,5*
24	AFS.04032	PIANALE CENTURION PER SEDILE REGOLABILE	*FLOOR TRAY CENT FOR ADJUSTABLE SEAT*

OPTIONAL ROLLBAR

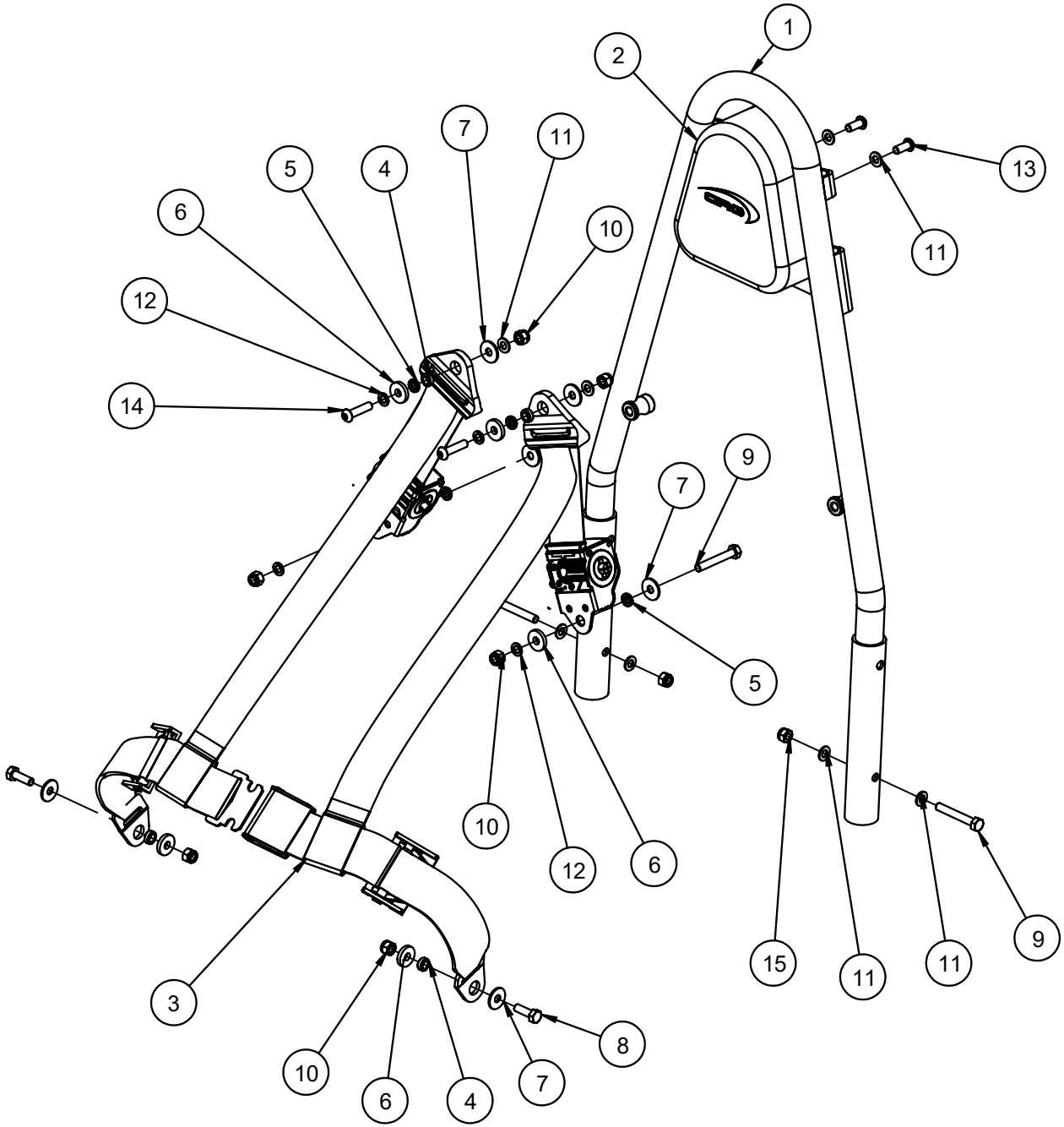

POS.	COD.	DESCRIZIONE	*DESCRIPTION*
1	FC0.03371	ROLLBAR CENTURION	*CENTURION ROLLBAR*
2	AFS.05760	POGGIATESTA CRG RENT TONDO STAMPATO	*PADDED HEADREST CRG RENT*
3	AFS.0534302	CINTURA SICUREZZA 4 PUNTI RENTAL	*SEAT BELT 4 POINTS*
4	FBN.00252	SPESSORE 8,5-14X 5 BARRETTA	*ROD SPACER 8,5-14X5 TRACK ROD*
5	SZ0.05395	SPESSORE 8X14X3,2 X CINTURE VELM	*SPACER 8X14X3,2 FOR BELTS WITH REEL*
6	AFN.00277	RONDELLA 8,4-23X4	*WASHER 8,4-23X4*
7	AFN.02415	RONDELLA 8,5-24X2	*8,5-24X2 WASHER*
8	AFN.00107	VITE M 8X 25 ESAGONALE 5739	*M 8X25 HEXAGONAL HEAD SCREW*
9	TES.08X055	VITE M 8X 55 ESAGONALE 5739	*M 8X 55 HEXAGONAL HEAD SCREW*
10	AFN.00128	DADO M 8 AUTOBLOCK ALTO	*NUT M8 HIGH SELF-LOCKING*
11	AFN.00350	RONDELLA 8,5-16X1,5	*WASHER 8,5-16X1,5*
12	AFN.00287	RONDELLA 8,5-14X1,5	*WASHER 8,5-14X1,5*
13	AFN.00909	VITE M 8X 20 ESAGONALE	*M8X20 HEXAGONAL HEAD SCREW*
14	AFN.00476	VITE M 8X 35 BOMBATA 7380	*M 8X 35 CONVEX HEAD SCREW*
15	AFN.00128	DADO M 8 AUTOBLOCK ALTO	*NUT M8 HIGH SELF-LOCKING*

CRG

CENTURION

C.R.G. s.r.l. Via Mantova 4F – 25017 – Lonato del Garda (BS) - TEL. +39.030.9912604 FAX +39.030.9130714

www.crgrentalkart.com – rental@kartcrg.com