CRG

Catalogo
Catalogue

2024



Centurion BIGFOOt

Rel 003



CRG
www.kartcrg.com

DICHIARAZIONE DI CONFORMITA'

CE

Il fabbricante C.R.G. S.r.l.
Via Mantova, 4F/G 25017 Lonato del Garda (BS) Italia

dichiara che la macchina

Denominazione: **Kart da noleggio Tipo B**
Funzione: **Kart progettato e costruito per noleggio**
Modello: **CENTURION**
Matricola n.:

è stata sviluppata e prodotta in conformità alle seguenti disposizioni:

Direttiva Macchine 2006/42/CE

Principali norme applicate:

UNI EN 16230-1 : 2015 Kart da noleggio – Requisiti di sicurezza e metodi di prova per kart

UNI EN ISO 12100 : 2010 Sicurezza del macchinario – Principi generali di progettazione - Valutazione del rischio e riduzione del rischio.

UNI EN ISO 3744 : 2010 Acustica – Determinazione dei livelli di potenza sonora delle sorgenti di rumore mediante misurazione della potenza sonora

EN ISO 4871 Acustica - Dichiarazione e verifica dei valori di emissione sonora in macchinari e attrezzature

UNI EN ISO 11202 : 2010 Acustica – Rumore emesso dalle macchine e dalle apparecchiature. Determinazione dei livelli di pressione sonora di emissione al posto di lavoro e in altre specifiche posizioni applicando correzioni ambientali approssimate.

UNI EN ISO 5349-1: 2004 Vibrazioni meccaniche – Misurazione e valutazione dell'esposizione dell'uomo alle vibrazioni trasmesse alla mano

Persona autorizzata a costituire il Fascicolo Tecnico:
Luca Bravo
c/o CRG Srl Via Mantova, 4F/G - 25017 Lonato del Garda (BS) Italia

Marina Vanaria
Legale rappresentante

C.R.G. S.r.l. Via MANTOVA 4F/G 25017 LONATO Del GARDA (BS) ITALY- Tel. +39 030-9912604 - Fax +39 030-9130714 P.Iva/C.F 00586340013 Cap.Soc. € 510.000,00 i.v.a

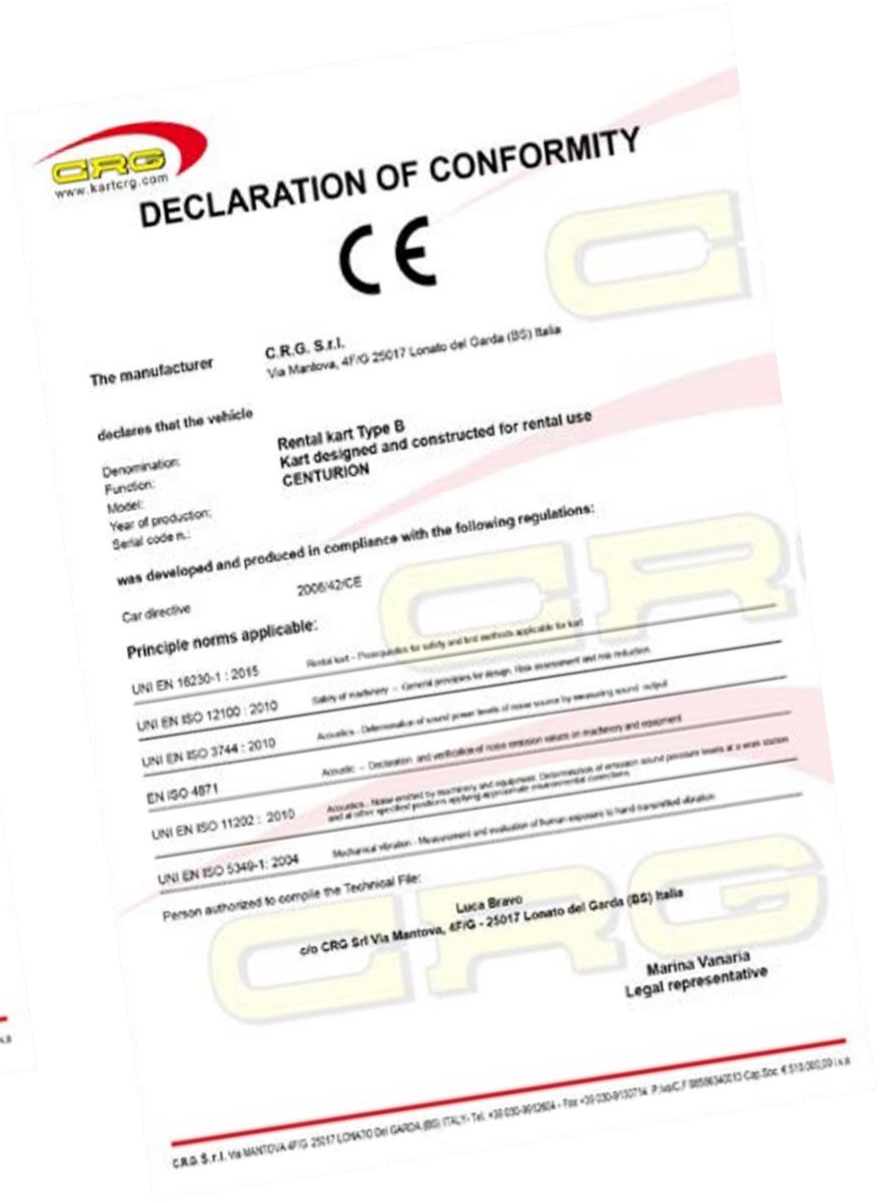

CRG
www.kartcrg.com

DECLARATION OF CONFORMITY

CE

The manufacturer C.R.G. S.r.l.
Via Mantova, 4F/G 25017 Lonato del Garda (BS) Italia

declares that the vehicle

Denomination: **Rental kart Type B**
Function: **Kart designed and constructed for rental use**
Model: **CENTURION**
Year of production:
Serial code n.:

was developed and produced in compliance with the following regulations:

Car directive 2006/42/CE

Principle norms applicable:

UNI EN 16230-1 : 2015 Rental kart - Prerequisites for safety and test methods applicable for kart

UNI EN ISO 12100 : 2010 Safety of machinery – General principles for design. Risk assessment and risk reduction.

UNI EN ISO 3744 : 2010 Acoustics - Determination of sound power levels of noise source by measuring sound output

EN ISO 4871 Acoustic – Declaration and verification of noise emission values on machinery and equipment

UNI EN ISO 11202 : 2010 Acoustics - Noise emitted by machinery and equipment. Determination of emission sound pressure levels at a work station and at other specified positions applying approximate environmental corrections.

UNI EN ISO 5349-1: 2004 Mechanical vibration - Measurement and evaluation of human exposure to hand transmitted vibration

Person authorized to compile the Technical File:
Luca Bravo
c/o CRG Srl Via Mantova, 4F/G - 25017 Lonato del Garda (BS) Italia

Marina Vanaria
Legal representative

C.R.G. S.r.l. Via MANTOVA 4F/G 25017 LONATO Del GARDA (BS) ITALY- Tel. +39 030-9912604 - Fax +39 030-9130714 P.Iva/C.F 00586340013 Cap.Soc. € 510.000,00 i.v.a

INDICE

SCOCCA 5
PARAURI LATERALE 7
TUBI E PRESTOLE 9
PIANTONE E VOLANTI 11
BARRETTA E FUSELLO 13
PIANALE CENTRALE 15
PIANALE INFERIORE & ANTERIORE 17
PEDALE FRENO 19
PEDALE GAS 21
POMPA FRENO 23
INTERRUZIONE GAS 25
ASSALE 27
DISCO FRENO & MOZZO 29
DISCO FRENO & MOZZO 30
PINZA FRENO 31
PINZA FRENO ANTERIORE 33
SALVA DISCO 35
SEDILI 37
TANICA SERBATOIO 39
BALESTRA 41
PROTEZIONE ANTERIORE 43
PROTEZIONE POSTERIORE 47
PROTEZIONE LATERALE DESTRA 49
PROTEZIONE LATERALE SINISTRA 51
SPOILER ANTERIORE 53
MARMITTA 55
MONTAGGIO MOTORE 57
TENDICATENA 59
CARENA DESTRA 61
CARENA SINISTRA 63
CARENA POSTERIORE 65
FRONTALINO 67
RUOTA POSTERIORE 69
RUOTA ANTERIORE 71
KIT ADESIVI 73
TUTA KART/ CASCO 75

REL N°	DATE	CHANGELOG
002	03/2023	Added discount color scheme , Edited pg3
003	02/2024	Minor Fixes

SCOCCA – FRAME

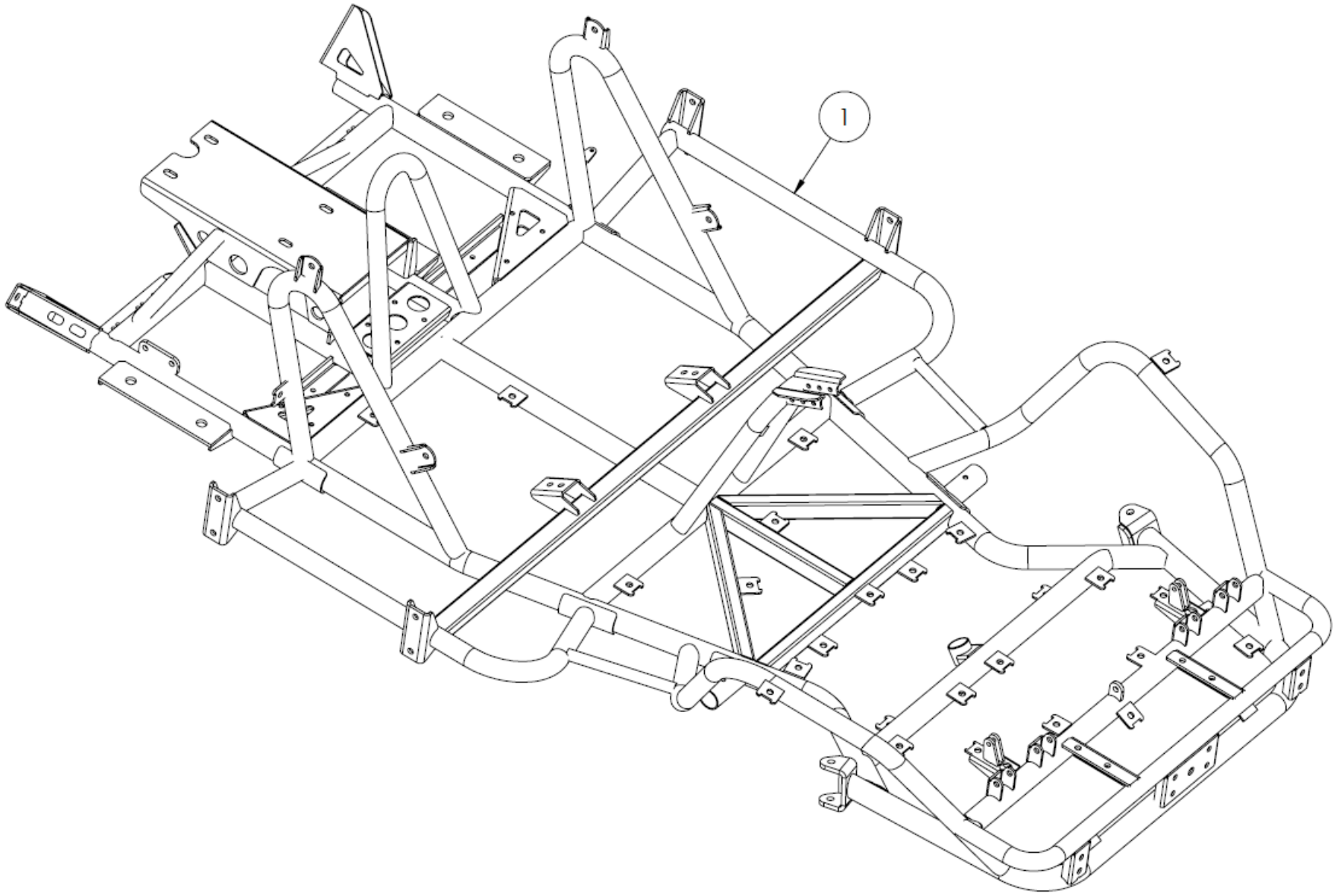

POS.	COD.	DESCRIZIONE	*DESCRIPTION*
1	FVO.03467	Scocca bigfoot nero opaco	*Matt black bigfoot frame*

PARAURI LATERALE – SIDE FAIRING

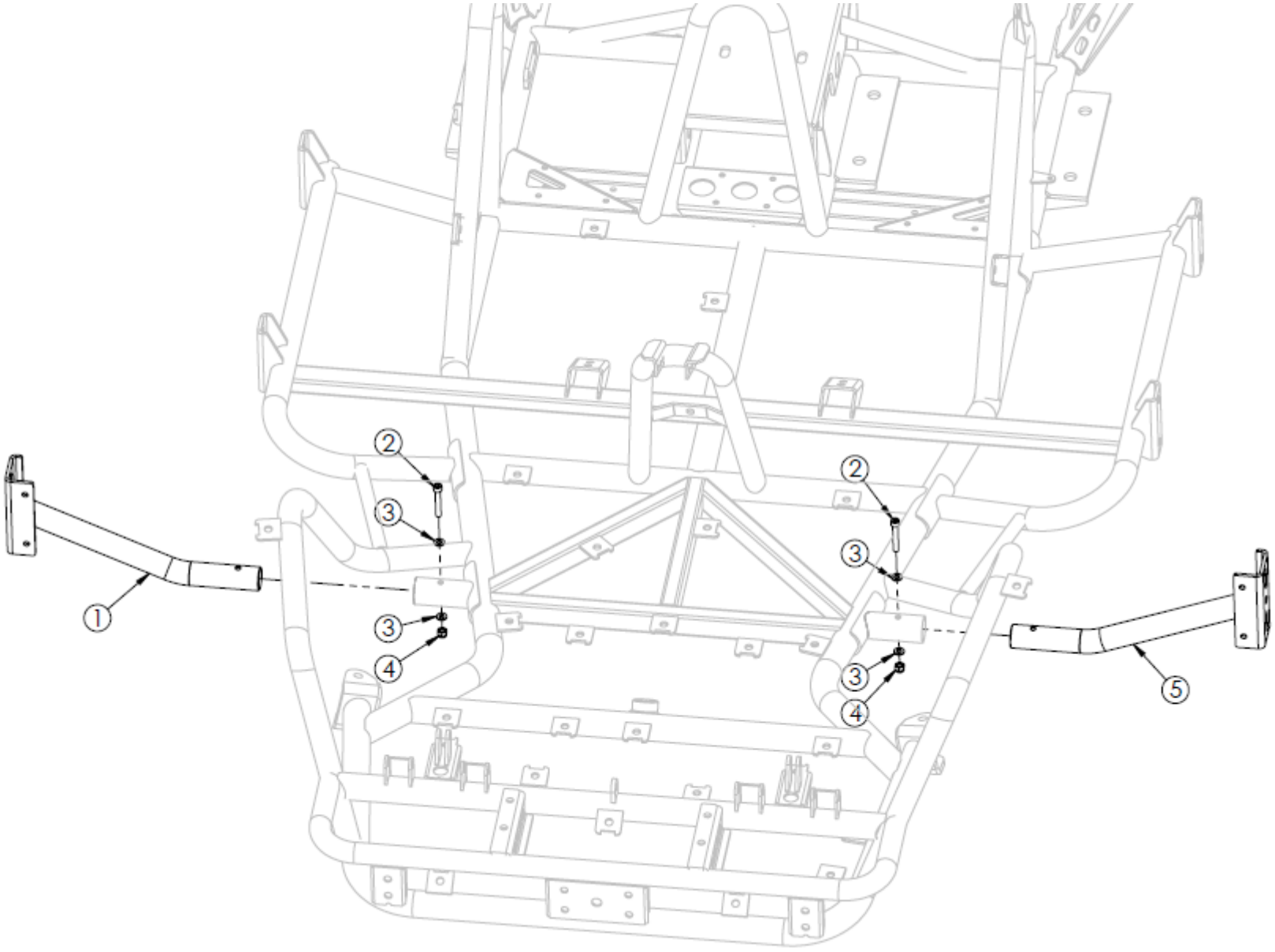

POS.	COD.	DESCRIZIONE	*DESCRIPTION*
1	SZE.2151D	Paraurti laterale centbi dx	*Side bumper rh centbi*
2	AFN.02035	Vite m 6x 45 cilindrica 5931	*M6x45 socket head screw*
3	AFN.00105	Rondella 6,5-12x1,5	*Washer 6,5-12x1,5*
4	AFN.00264	Dado m 6 autoblock alto	*Nut m6 high self-locking*
5	SZE.2151S	Paraurti laterale centbi sx	*Side bumper lf centbi*

TUBI E PRESTOLE – BRAKE TUBE AND CLIPS

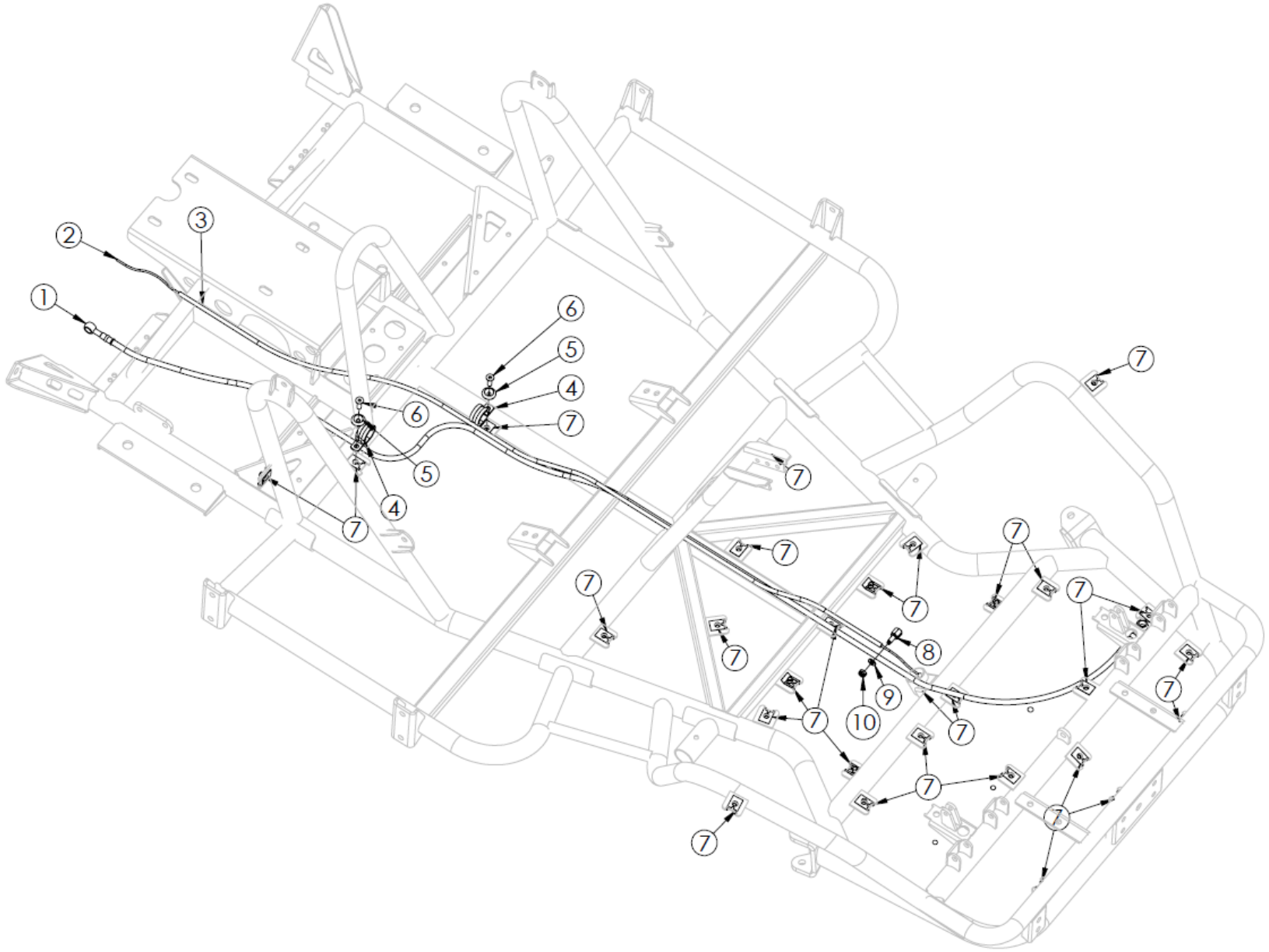

POS.	COD.	DESCRIZIONE	*DESCRIPTION*
1	AFS.01792	Tubo freno occhiello mm1800 rosso post cent disab	*Brake tube eyelet 1800mm red*
2	AFS.02130	Filo gas mm2200 centurion sp.1,5	*Gas cable cent sp.1,5*
3	AMS.00516	Guaina filo d6 frizione	*Sheater ø6 for clutch*
4	AFS.02945	Morsetto cavo 26/m6 centurion	*Cable clamp 26/m6 cent*
5	SAN.00249	Rondella 6 svasata nera	*Washer 6 countersunk black*
6	AFN.00261	Vite m 6x 20 svasata 5933	*M6x20 countersunk head screw*
7	AFS.02327	Clips prestola m6 centurion	*Centurion clips m6 for fitting*
8	SZ0.00420	Raccordo filo gas evo centbi	*Gas cable fitting evo centbi*
9	AFN.00105	Rondella 6,5-12x1,5	*Washer 6,5-12x1,5*
10	AFN.00106	Dado m 6 autoblock basso	*Nut m6 low self-locking*

PIANTONE E VOLANTI – STEERING WHEEL AND COLUMN

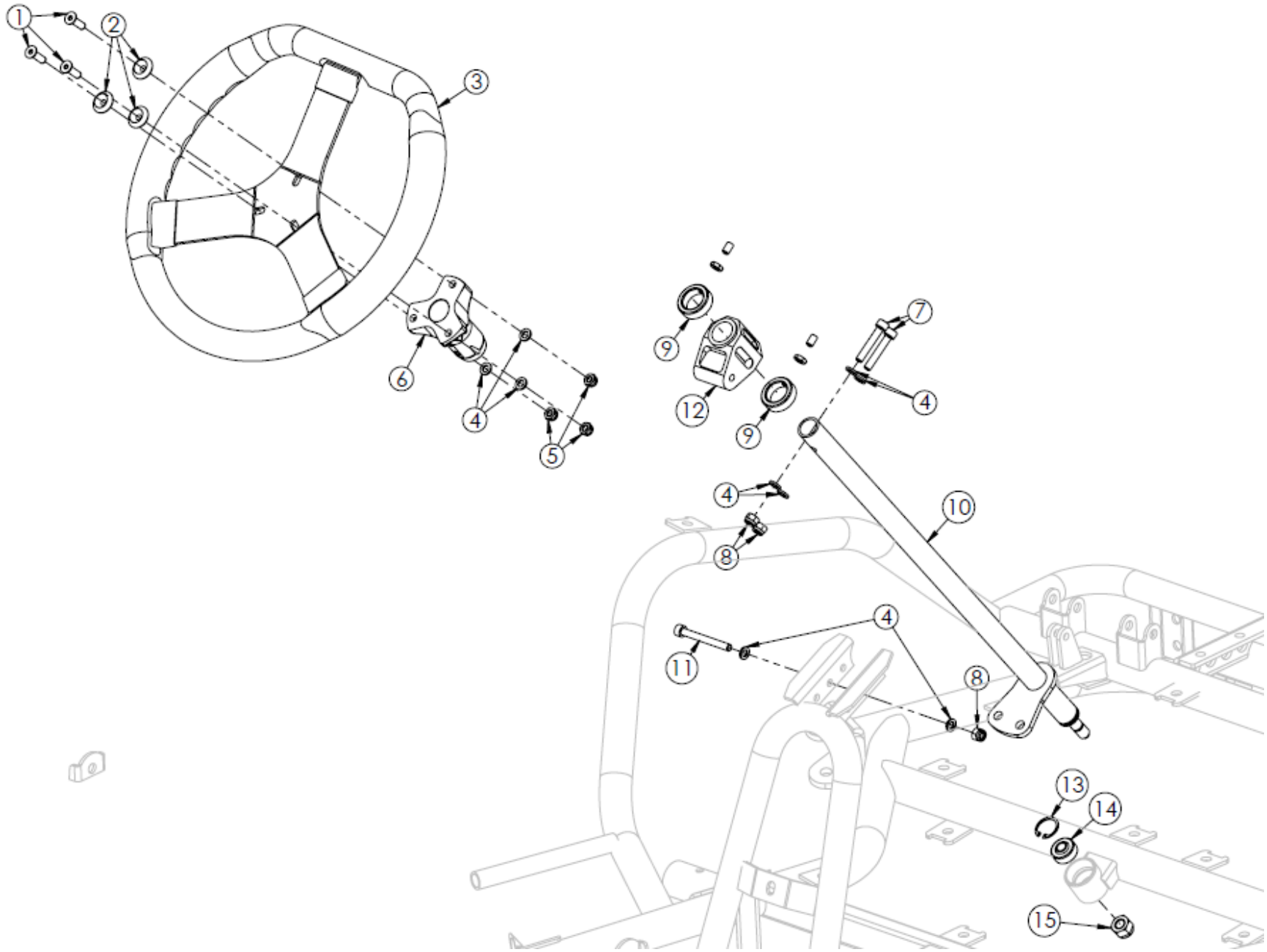

POS.	COD.	DESCRIZIONE	*DESCRIPTION*
1	AFN.00261	Vite m 6x 20 svasata 5933	*M6x20 countersunk head screw*
2	SAN.00249	Rondella 6 svasata nera	*Washer 6 countersunk black*
3	AFS.04221	Volante noleggio centurion 360 2018	*Steering wheel cent ø360*
3	AFS.04288	Volante noleggio centurion 320 2018	*Steering wheel cent ø320*
4	AFN.00105	Rondella 6,5-12x1,5	*Washer 6,5-12x1,5*
5	AFN.00106	Dado m 6 autoblock basso	*Nut m6 low self-locking*
6	FAN.01626	Mozzo volante inclinato nero	*Steering wheel hub inclined black*
7	AFN.02154	Vite m 6x 35 cilindrica 12.9 5931	*M 6x35 socket head screw 12.9*
8	AFN.00264	Dado m 6 autoblock alto	*Nut m6 high self-locking*
9	FKN.00356	Kit boccola piantone (2)	*Steering column lock ring kit*
10	FC0.02068	Piantone sterzo centurionbi	*Steering wheel column centbi*
11	AFN.00594	Vite m 6x 60 cilindrica 5931	*M 6x 60 socket head screw*
12	AFS.04812	Supporto piantone plastica 4 fori	*Plastic column support 4 holes*
13	AFN.00154	Seeger d22 piantone/pompa acqua	*Seeger d22 steering column/water pump*
14	AFN.00153	Uniball piantone ø 8	*Steering column bearing*
15	AFN.02393	Dado m10 autoblock alto	*Nut m10 high self-locking*

BARRETTA E FUSELLO – STEERING ROD AND STUB AXLE

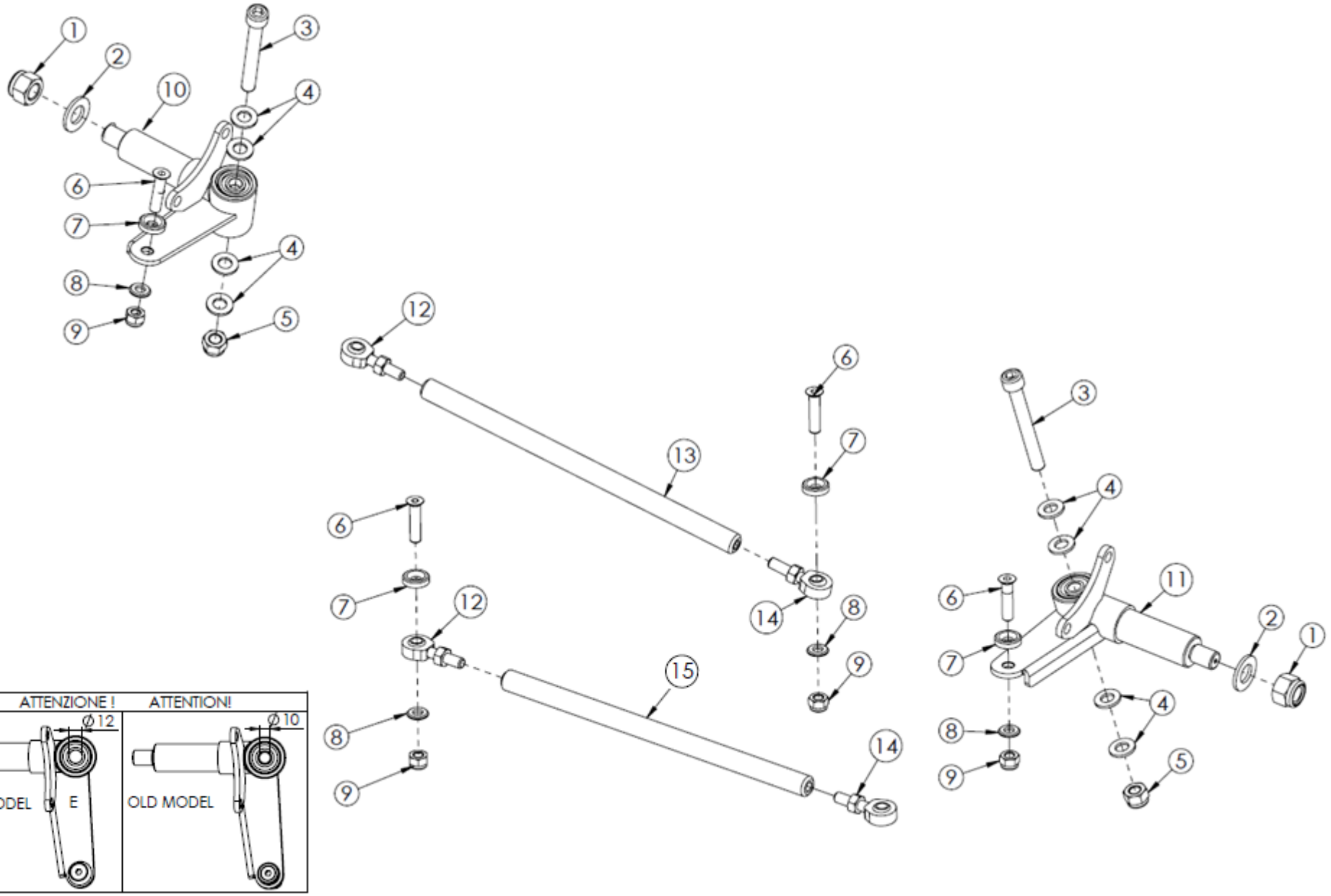

POS.	COD.	DESCRIZIONE	*DESCRIPTION*
1	AFN.00058	Dado m14x1,5 autoblock basso	*Nut m14x1,5 self-locking*
2	AFN.01564	Rondella 15x30x2,5	*Washer 15-30x2,5*
3	AFN.05487	Vite m12x100 cilin. 12.9 filetto 30mm zincata	*M 12x 100 cylinder. 12.9 thread 30mm galvanized*
4	SZ0.05365	Rondella 12-20x2,5 (fusello cent)	*Washer 12 - 20x2,5*
5	AFN.02364	Dado m12 autoblock alto	*M12 high self-locking nut*
6	AFN.00483	Vite m 8x 40 svasata 5933	*M 8x 40 countersunk head screw*
7	SAN.00146	Rondella 8 svasata nera	*Washer 8 countersunk black*
8	AFN.00287	Rondella 8,5-14x1,5	*Washer 8,5-14x1,5*
9	AFN.00128	Dado m 8 autoblock alto	*Nut m8 high self-locking*
10	FM0.0424S	Fusello nol ce ø12 sx completo	*Stub axle ø12 lf completo ce*
11	FM0.0424D	Fusello nol ce ø12 dx completo	*Stub axle ø12 rh complete ce*
12	AFS.0047S	Uniball sterzo sx c/dado	*Ball joint left with nut*
13	AFS.03600	Barretta sterzo nylon cm.26 cent	*Track rod cm.26 centurion*
14	AFS.0047D	Uniball sterzo dx c/dado	*Ball joint rh with nut*
15	AFS.02312	Barretta sterzo nylon cm.28 cent	*Track rod cm.28 centurion*

PRIMA DI ORDINARE RICAMBI, VI CONSIGLIAMO DI VERIFICARE IL VOSTRO MODELLO - BEFORE ORDERING PARTS, WE ADVISE YOU TO CHECK YOUR MODEL

1	AFN.02328	Vite m10x 80 cilindrica 12.9 5931	*M10x 80 socket head screw 12,9*
2	AFN.01637	Rondella 10,5-20x2	*Washer 10,5-20x2*
3	AFN.02393	Dado m10 autoblock alto	*Nut m10 high self-locking*
4	FM0.0424S	Fusello nol ce ø12 sx completo	*Stub axle ø12 lf completo ce*
5	FM0.0424D	Fusello nol ce ø12 dx completo	*Stub axle ø12 rh complete ce*

PIANALE CENTRALE – INNER FLOOR TRAY

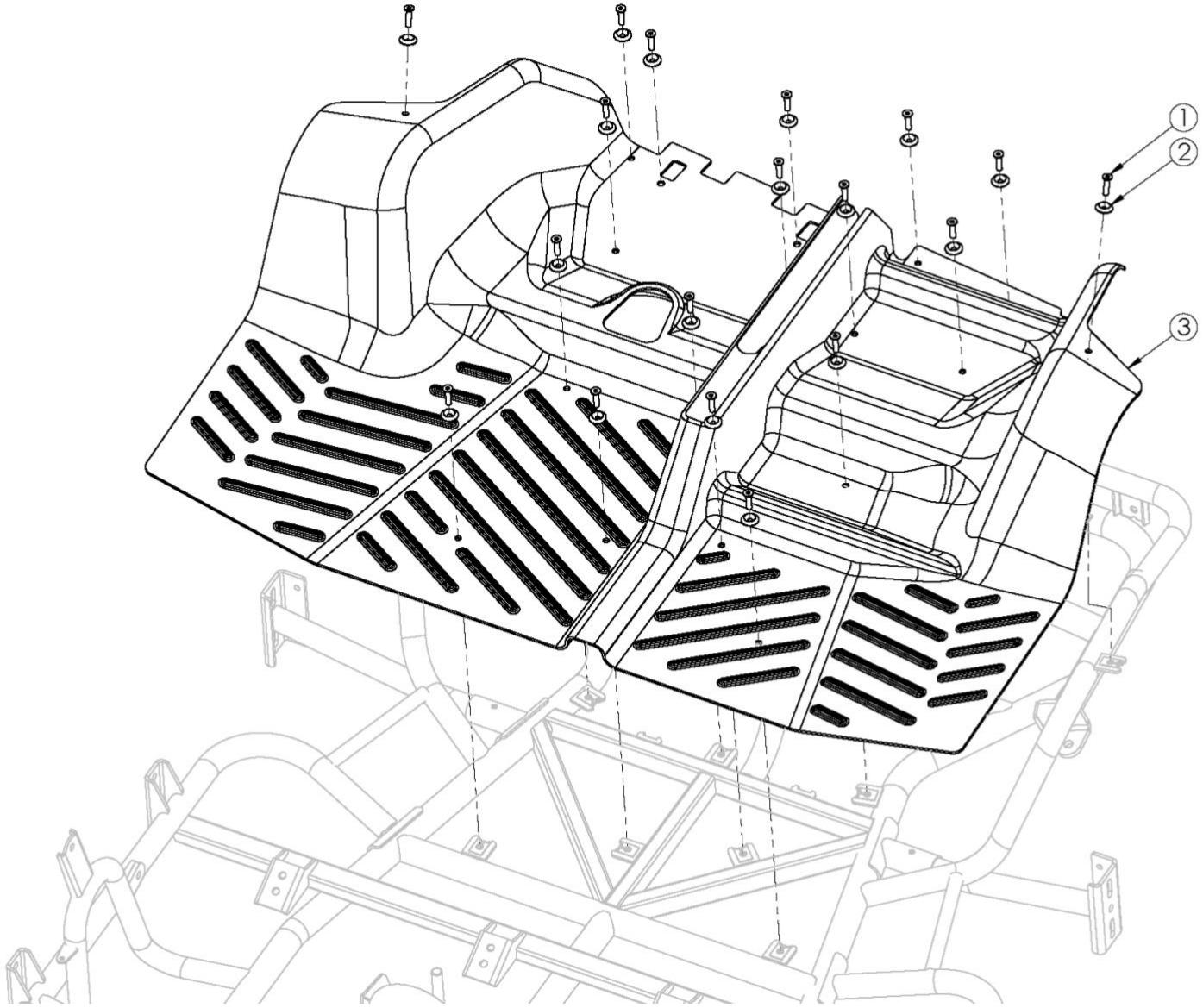

POS.	COD.	DESCRIZIONE	*DESCRIPTION*
1	AFN.00295	Vite m 6x 25 svasata 5933	*M6x25 countersunk head screw*
2	SAN.00249	Rondella 6 svasata nera	*Washer 6 countersunk black*
3	AFS.02674	Pianale centurionbi centrale	*Central floor tray centbi*

PIANALE INFERIORE & ANTERIORE – FRONT & BOTTOM FLOOR TRAY

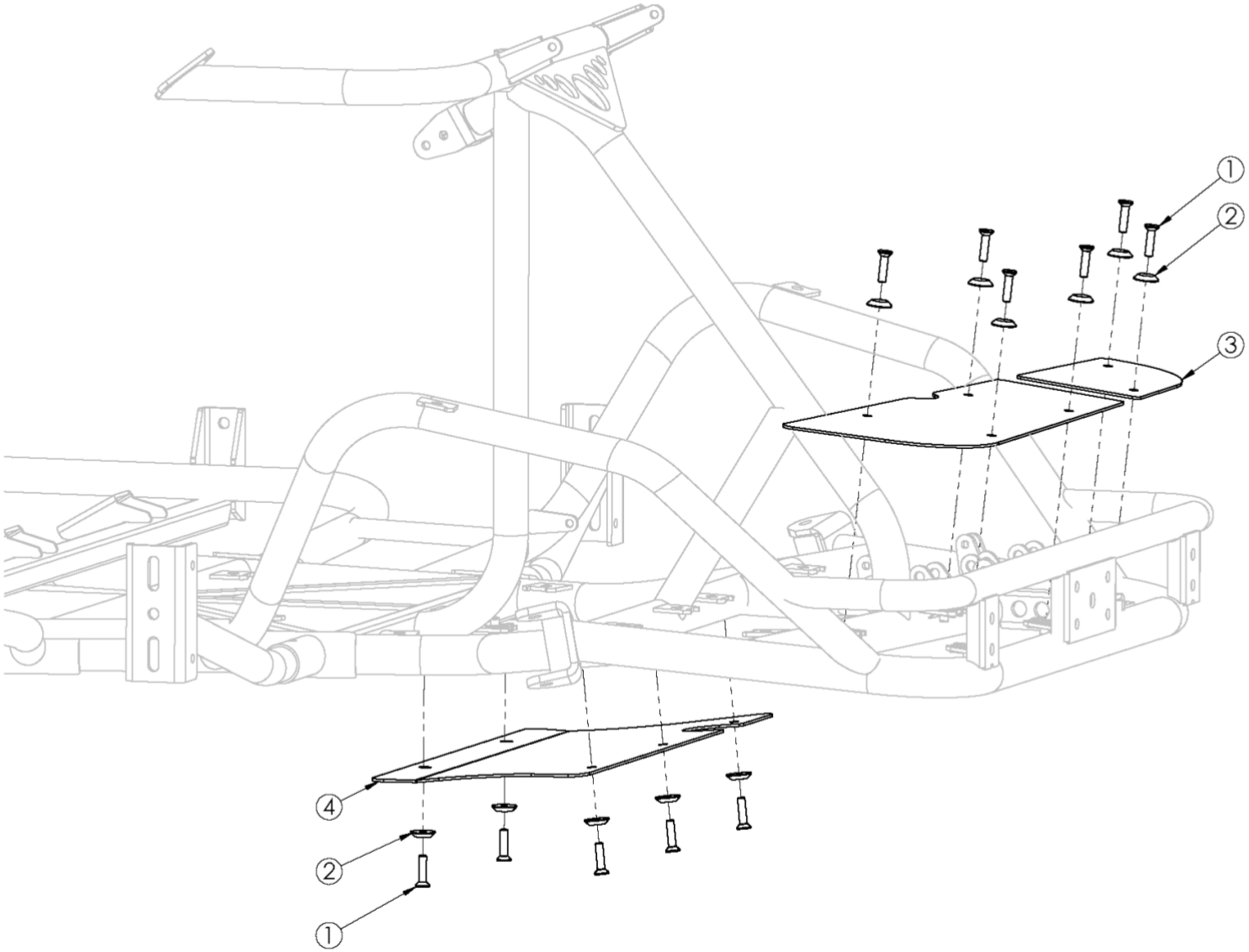

POS.	COD.	DESCRIZIONE	*DESCRIPTION*
1	AFN.00295	Vite m 6x 25 svasata 5933	*M6x25 countersunk head screw*
2	SAN.00249	Rondella 6 svasata nera	*Washer 6 countersunk black*
3	AFS.02822	Pianale centurionbi anteriore	*Front floor tray centbi*
3	AFS.02859	Pianale inferiore-carter sterzo centbi	*Bottom floor tray centbi*

PEDALE FRENO – BRAKE PEDAL

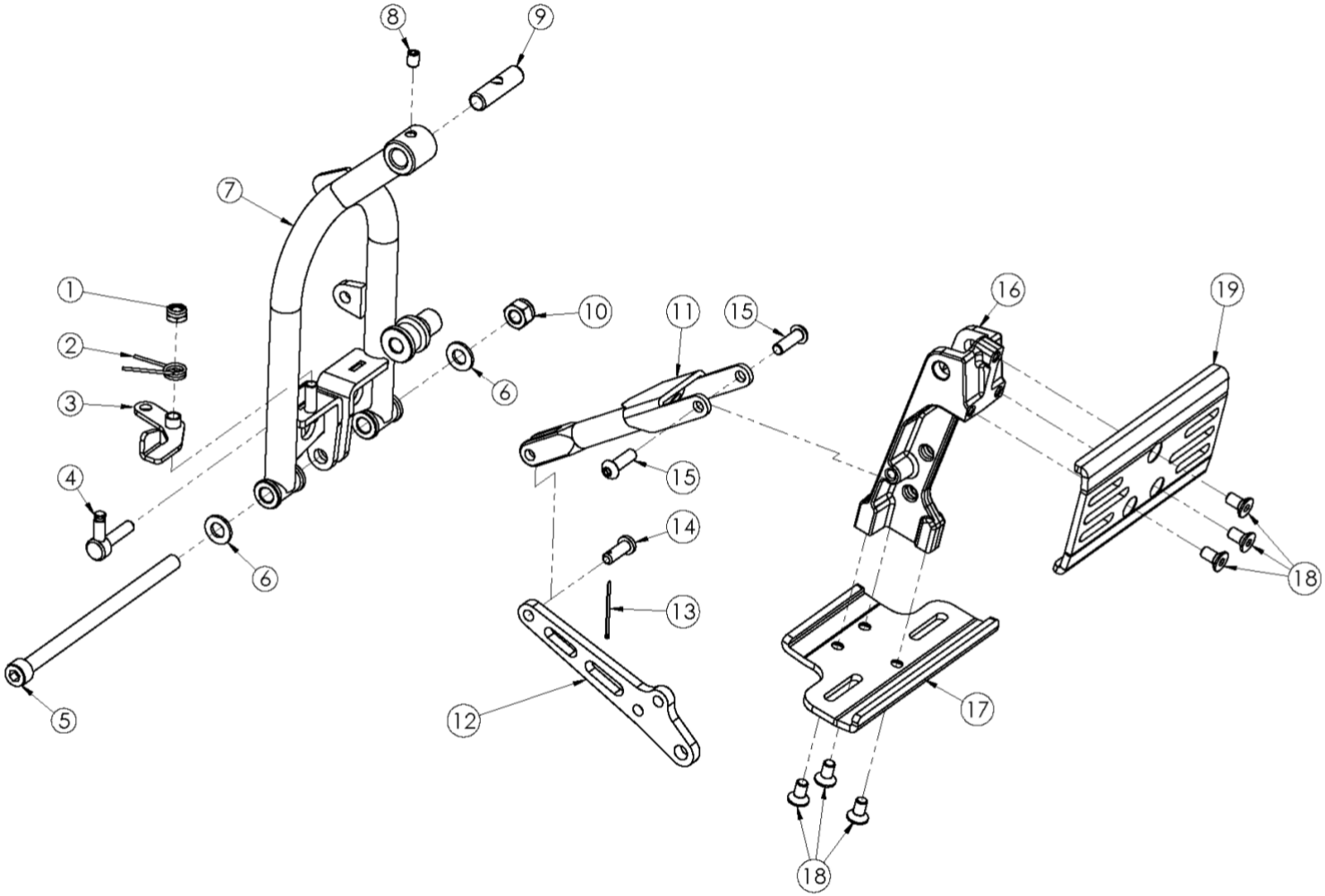

POS.	COD.	DESCRIZIONE	*DESCRIPTION*
1	AFN.00106	Dado m 6 autoblock basso	*Nut m6 low self-locking*
2	SZ0.02756	Molla manopola pedale centurionbi	*Pedal spring knob centbi*
3	SZ0.02711	Manopola fissaggio pedale centurionbi	*Pedal fixing knob centbi*
4	SZ0.02870	Perno manopola fissaggio pedale centbi	*Pedal fixing knob pivot centbi*
5	AFN.00114	Vite m 8x140 cilindrica 5931	*M 8x140 socket head screw*
6	AFN.02209	Rondella 8,4-16x1,6	*Washer 8,4-16x1,6*
7	SC0.02717	Pedale freno centbi	*Brake pedal centbi*
8	AFN.02409	Grano m 6x 8 bloccaggio pedale centbi	*Grub screw m6x 8 centbi block system*
9	SZ0.02703	Perno pedale d10 2012 centurionbi	*Pedal pivot d10 centbi*
10	AFN.00128	Dado m 8 autoblock alto	*Nut m8 high self-locking*
11	SC0.02715	Arretramento pedale freno e gas centbi	*Back trolley for pedals centbi*
12	SC0.02569	Biella pedale centurionbi	*Foot pedal conrod centbi*
13	AFN.00201	Copiglia	*Master cylinder split pin*
14	SBN.00214	Spina ripartitore mm17,5	*Divider pin 17,5mm*
15	AFN.00502	Vite m 6x 16 bombata 7380	*M 6x16 convex head screw*
16	SL1.02864	Corpo pedale evo centbi	*Pedal body evo centbi*
17	SC0.02731	Piastrina poggiapiedi bassa freno centbi	*Feet support plate low -brake centbi*
18	AFN.01717	Vite m 6x 16 svasata 5933	*M6x16 countersunk head screw*
19	SC0.02730	Piastrina poggiapiedi alta freno centbi	*Feet support plate high-brake centbi*

PEDALE GAS – GAS PEDAL

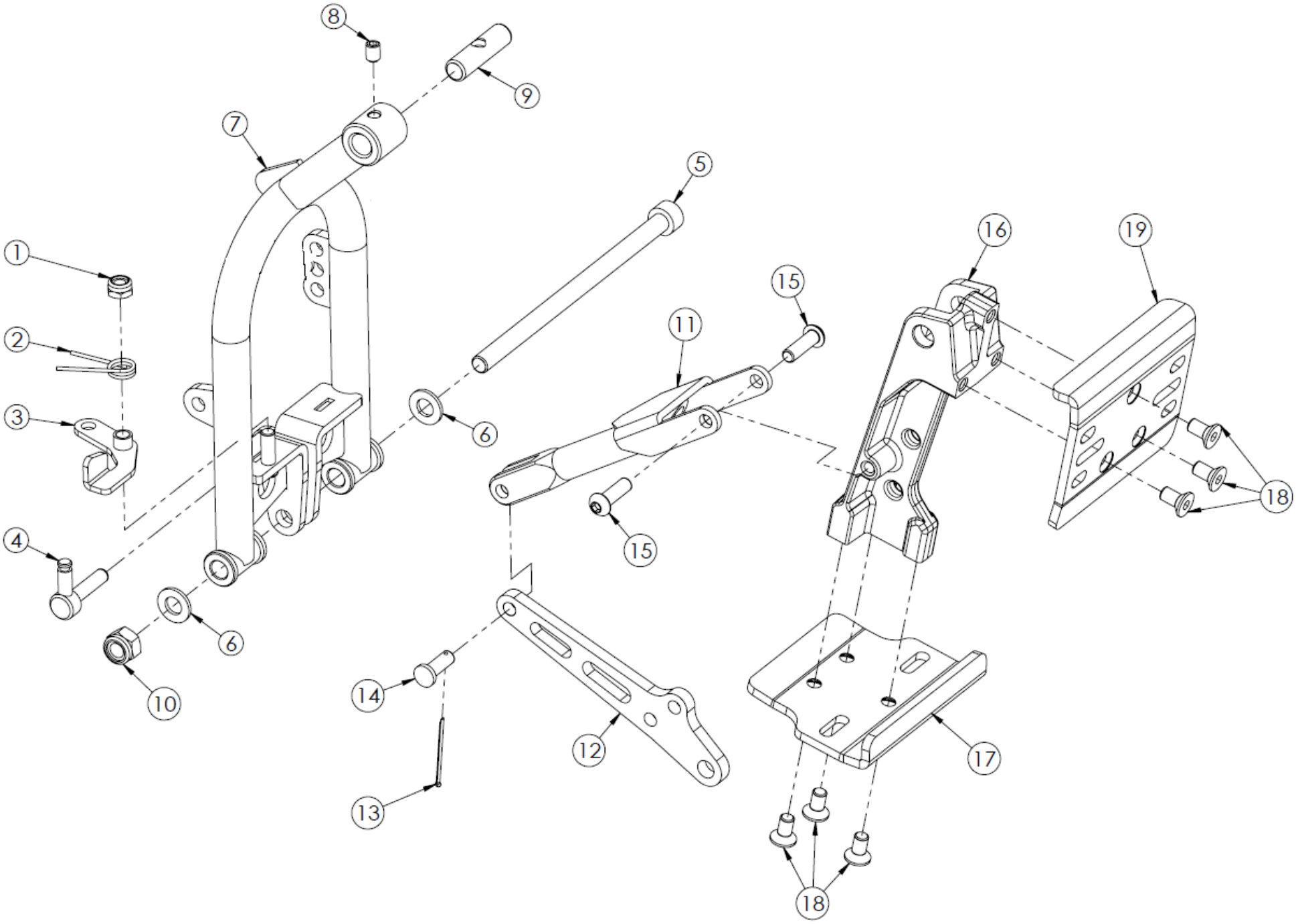

POS.	COD.	DESCRIZIONE	*DESCRIPTION*
1	AFN.00106	Dado m 6 autoblock basso	*Nut m6 low self-locking*
2	SZ0.02756	Molla manopola pedale centurionbi	*Pedal spring knob centbi*
3	SZ0.02711	Manopola fissaggio pedale centurionbi	*Pedal fixing knob centbi*
4	SZ0.02870	Perno manopola fissaggio pedale centbi	*Pedal fixing knob pivot centbi*
5	AFN.00114	Vite m 8x140 cilindrica 5931	*M 8x140 socket head screw*
6	AFN.02209	Rondella 8,4-16x1,6	*Washer 8,4-16x1,6*
7	SC0.02716	Pedale gas centbi	*Gas pedal centbi*
8	AFN.02409	Grano m 6x 8 bloccaggio pedale centbi	*Grub screw m6x 8 centbi block system*
9	SZ0.02703	Perno pedale d10 2012 centurionbi	*Pedal pivot d10 centbi*
10	AFN.00128	Dado m 8 autoblock alto	*Nut m8 high self-locking*
11	SC0.02715	Arretramento pedale freno e gas centbi	*Back trolley for pedals centbi*
12	SC0.02569	Biella pedale centurionbi	*Foot pedal conrod centbi*
13	AFN.00201	Copiglia	*Master cylinder split pin*
14	SBN.00214	Spina ripartitore mm17,5	*Divider pin 17,5mm*
15	AFN.00502	Vite m 6x 16 bombata 7380	*M 6x16 convex head screw*
16	SL1.02864	Corpo pedale evo centbi	*Pedal body evo centbi*
17	SC0.02732	Piastrina poggiapiedi bassa gas centbi	*Feet support plate low-gas centbi*
18	AFN.01717	Vite m 6x 16 svasata 5933	*M6x16 countersunk head screw*
19	SC0.02733	Piastrina poggiapiedi alta gas centbi	*Feet support plate high-gas centbi*

POMPA FRENO – MASTER CYLINDER

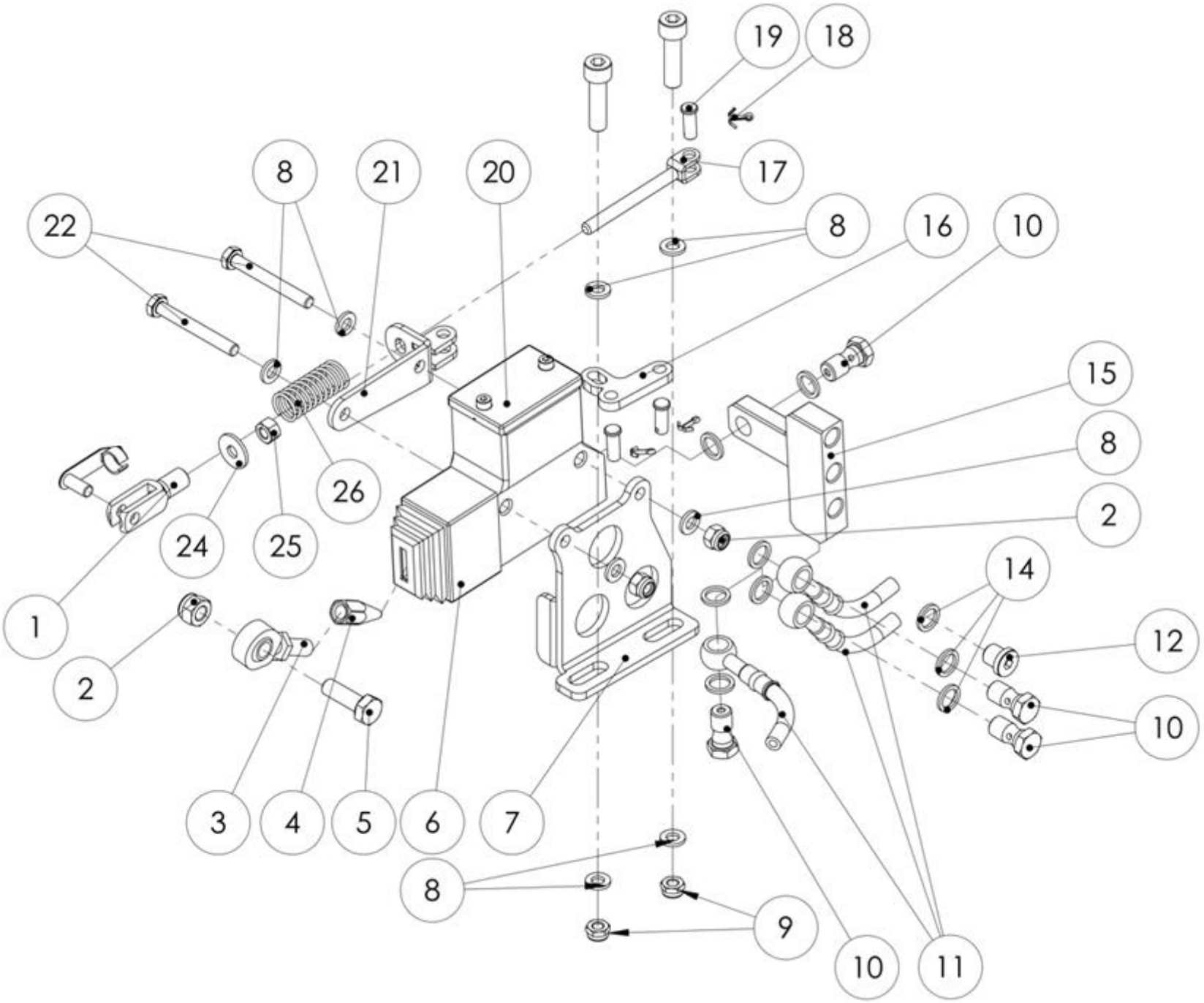

POS.	COD.	DESCRIZIONE	*DESCRIPTION*
1	AFS.00216	Forchetta semplice std sp.6	*Simple fork standard*
2	AFN.0049D	Dado m 8 dx	*Nut m8*
3	AFS.0047D	Uniball sterzo dx c/dado	*Ball joint rh with nut*
4	SZ0.00607	Puntale pompa freni att.uniball centbi	*Master cyl.pivot uniball connec centbi*
5	AFN.00681	Vite m 8x 50 cilindrica 5931	*M8x50 hex socket screw*
6	AFS.00199	Copripolvere pompa freno rosso	*Dust cover for brake pump*
7	SZ0.02560	Piastra pompa centbi	*Master cylinder plate centbi*
8	AFN.00129	Rondella 8,5-17x1,5	*Washer 8,5-17x1,5*
9	AFN.00160	Dado m 8 autoblock basso	*Nut m8 low self-locking*
10	SZ0.00185	Raccordo m10 v09/10	*Fitting m10*
11	AFS.02753	Tubo freno occhiello mm2000 rosso centbi	*Brake tube eyelet mm2000*
12	SBN.00369	Tappo m10 v09/10	*Caliper cap m10 v09/v10*
14	AFN.00186	Rondella 10,5-14x2 rame	*Copper washer 10,5-14x2*
15	FAN.01604	Riduzione tripla pompa freno centbi	*Master cyl.triple reduction centbi*
16	SZ0.03878	Triangolo pedale freno bigfoot	*Bigfoot brake pedal triangle*
17	SZ0.03882	Vite m6x60 con foro 6 bigfoot	*M6x60 screw with 6 bigfoot hole*
18	AFN.00201	Copiglia	*Master cylinder split pin*
19	SBN.00214	Spina ripartitore mm17,5	*Divider pin 17,5mm*
20	FM0.00199	Pompa freni completa centbi	*Rear master cylinder complete centbi*
21	SZ0.03879	Supporto molla pedale freno bigfoot	*Bigfoot brake pedal spring support*
22	AFN.00280	Vite m 6x 50 esagonale 5739	*M 6x 50 hexagonal head screw*
24	AFN.00160	Dado m 8 autoblock basso	*Nut m8 low self-locking*
25	AFN.00093	Dado m 6	*Nut m 6*
26	SZ0.00422	Molla pompa freni v08	*Master cylinder spring v08*

INTERRUZIONE GAS – THROTTLE INTERRUPTION

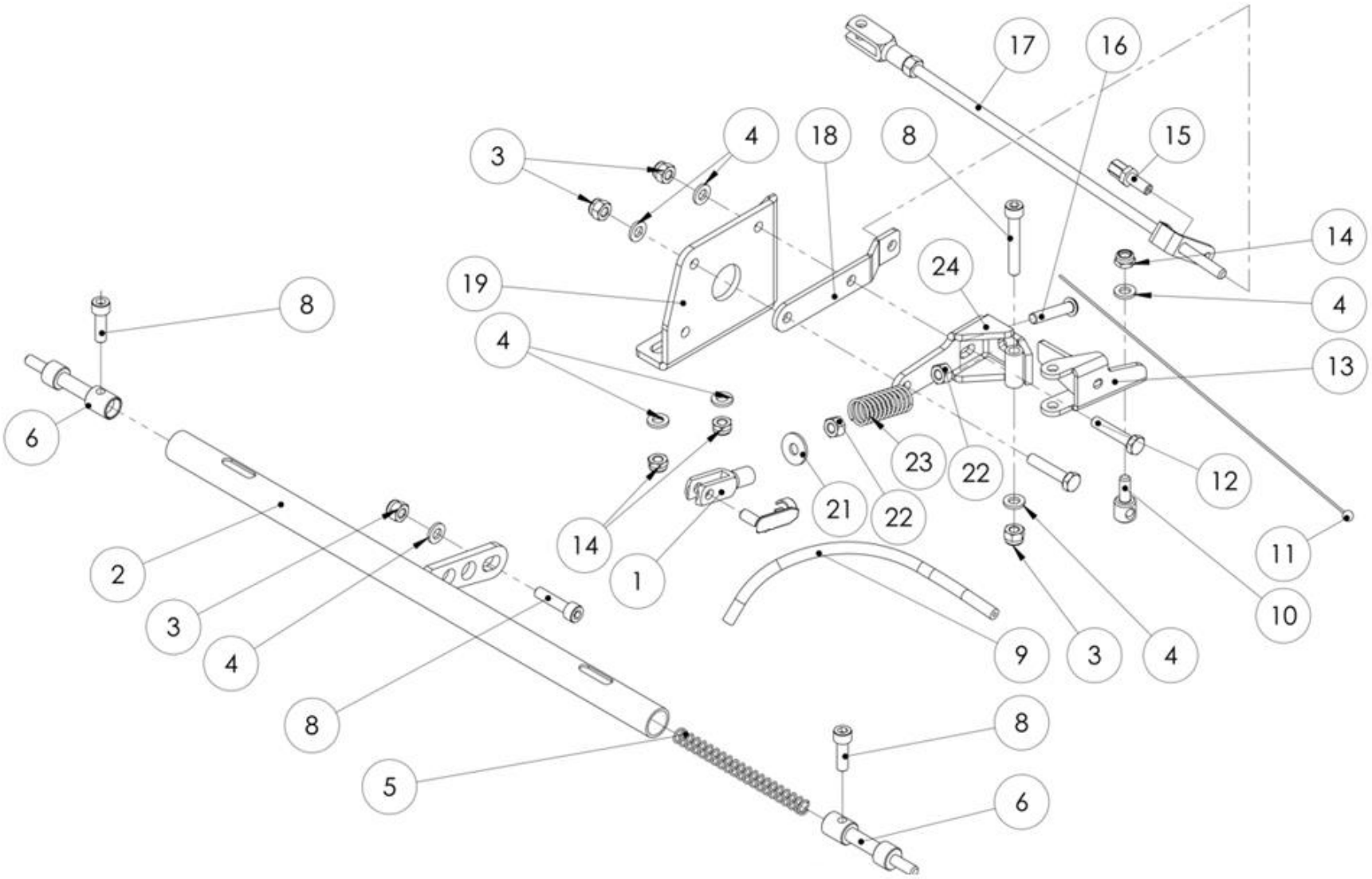

POS.	COD.	DESCRIZIONE	*DESCRIPTION*
1	AFS.00216	Forchetta semplice std sp.6	*Simple fork standard*
2	SC0.03464	Corpo fix pedale bigfoot	*Bigfoot pedal fix body*
3	AFN.00128	Dado m 8 autoblock alto	*Nut m8 high self-locking*
4	AFN.00129	Rondella 8,5-17x1,5	*Washer 8,5-17x1,5*
5	SZ0.02201	Molla ritorno carburatore cent	*Carburettor recovery spring cent*
6	SZ0.02705	Perno fissaggio pedale centurionbi	*Pedal fixing pivot centbi*
8	AFN.00732	Vite m 8x 25 cilindrica 5931	*M 8x25 socket head screw*
9	AMS.00591	Guaina filo d7 gas	*Outer cable ø7 for gas*
10	SBN.02396	Perno fermafilo cent	*Cable adjuster pivot black*
11	AFS.02130	Filo gas mm2200 centurion sp.1,5	*Gas cable cent sp.1,5*
12	AFN.05530	Vite m 6x 25 esagonale 5739	*M6x25 hexagonal screw*
13	SZ0.02513	Biella tira saldata filo centbi	*Welded tightener conrod centbi*
14	AFN.00160	Dado m 8 autoblock basso	*Nut m8 low self-locking*
15	AFS.00257	Registro filo m6	*Cable adjuster m6*
16	AFN.02322	Vite m 6x 70 svasata 5933	*M 6x 70 countersunk head screw*
17	SZ0.03881	Leva interruzione gas bigfoot	*Bigfoot gas stop lever*
18	SZ0.03880	Supporto filo pedale acceleratore bigfoot	*Bigfoot accelerator pedal wire support*
19	SZ0.03595	Piastra pompa acc. bigfoot	*Pump plate acc. bigfoot*
21	AFN.00263	Rondella 6,5-18x1,6	*Washer 6,5-18x1,6*
22	AFN.00093	Dado m 6	*Nut m 6*
23	SZ0.00422	Molla pompa freni v08	*Master cylinder spring v08*
24	SZ0.03594	Supporto molla pedale acc. bigfoot biposto	*Pedal spring support acc. two-seater bigfoot*

ASSALE – REAR AXLE

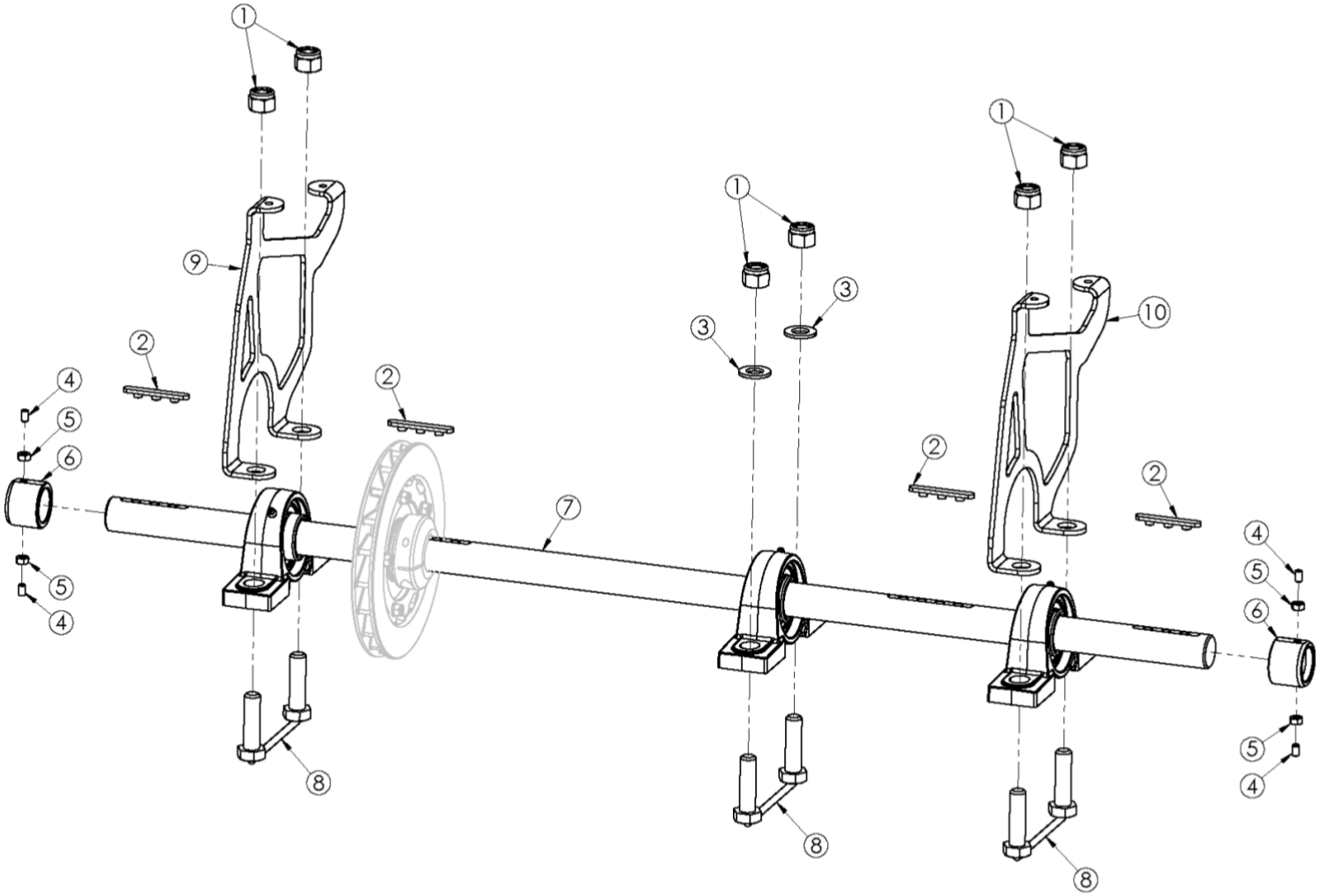

POS.	COD.	DESCRIZIONE	*DESCRIPTION*
1	AFN.02682	Dado m14 autoblock alto	*M14 tall selflocking nut*
2	AFS.0024701	Chiavetta assale 3 pioli brunita	*Rear axle keyway 3 pins*
3	AFN.01564	Rondella 15x30x2,5	*Washer 15-30x2,5*
4	AFN.00357	Grano m 6x10 (piantone-pompa v06)	*Grub screw m6x10*
5	AFN.00093	Dado m 6	*Nut m 6*
6	SZ0.02519	Boccola centurion fissaggio assale	*Rear axle clamp bushing cent*
7	FZ0.02754	Assale 30 bianco centurionbi	*Centurionbi rear axle 30 white*
8	SZ0.02368	Coppia viti cusc. assale cent 14x45	*Axle bearing couple of screws cent*
9	SZ0.2249S	Supporto carena posteriore sx centurion	*Rear fairing support lf centurion*
10	SZ0.2249D	Supporto carena posteriore dx centurion	*Rear fairing support rh centurion*

DISCO FRENO & MOZZO – BRAKE DISC & HUB

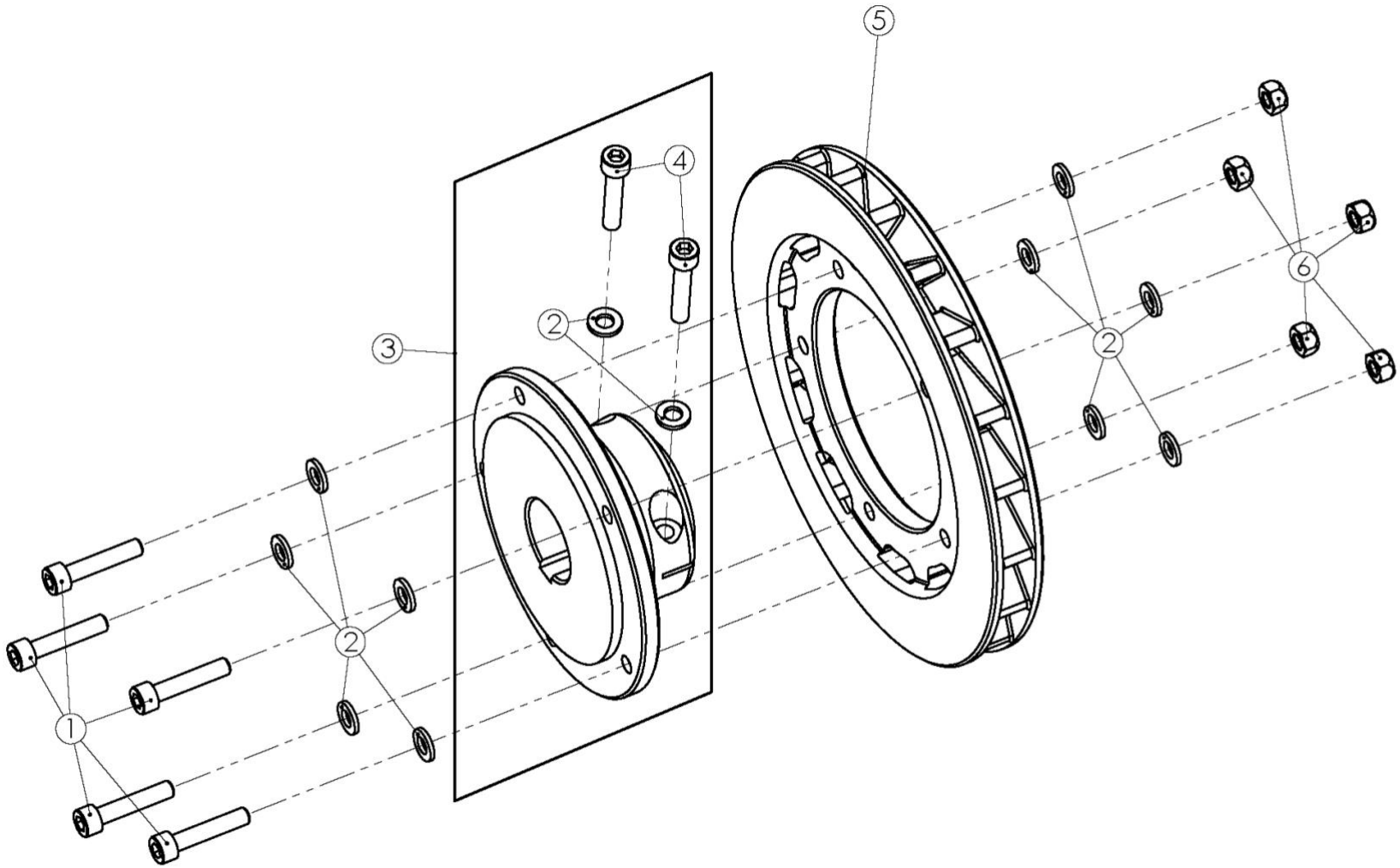

DISCO FRENO & MOZZO – BRAKE DISC & HUB

POS.	COD.	DESCRIZIONE	*DESCRIPTION*
1	AFN.00478	Vite m 6x 25 cilindrica 5931	*M 6x25 socket head screw*
2	AFN.06156	Rondella 6,5-10x1 acciaio inox	*Brass washer 6,5-10x1 inox*
3	FM0.02344	Mozzo disco posteriore al 30 cent completo	*Rear brake disc hub 30 complete cent*
4	AFN.02154	Vite m 6x 35 cilindrica 12.9 5931	*M 6x35 socket head screw 12.9*
5	SL1.02345	Rett>disco freno posteriore cent	*Rear brake disc cent*
6	AFN.00234	Dado m 6 metalblock	*Nut m 6 metalblock*

PINZA FRENO – BRAKE CALIPER

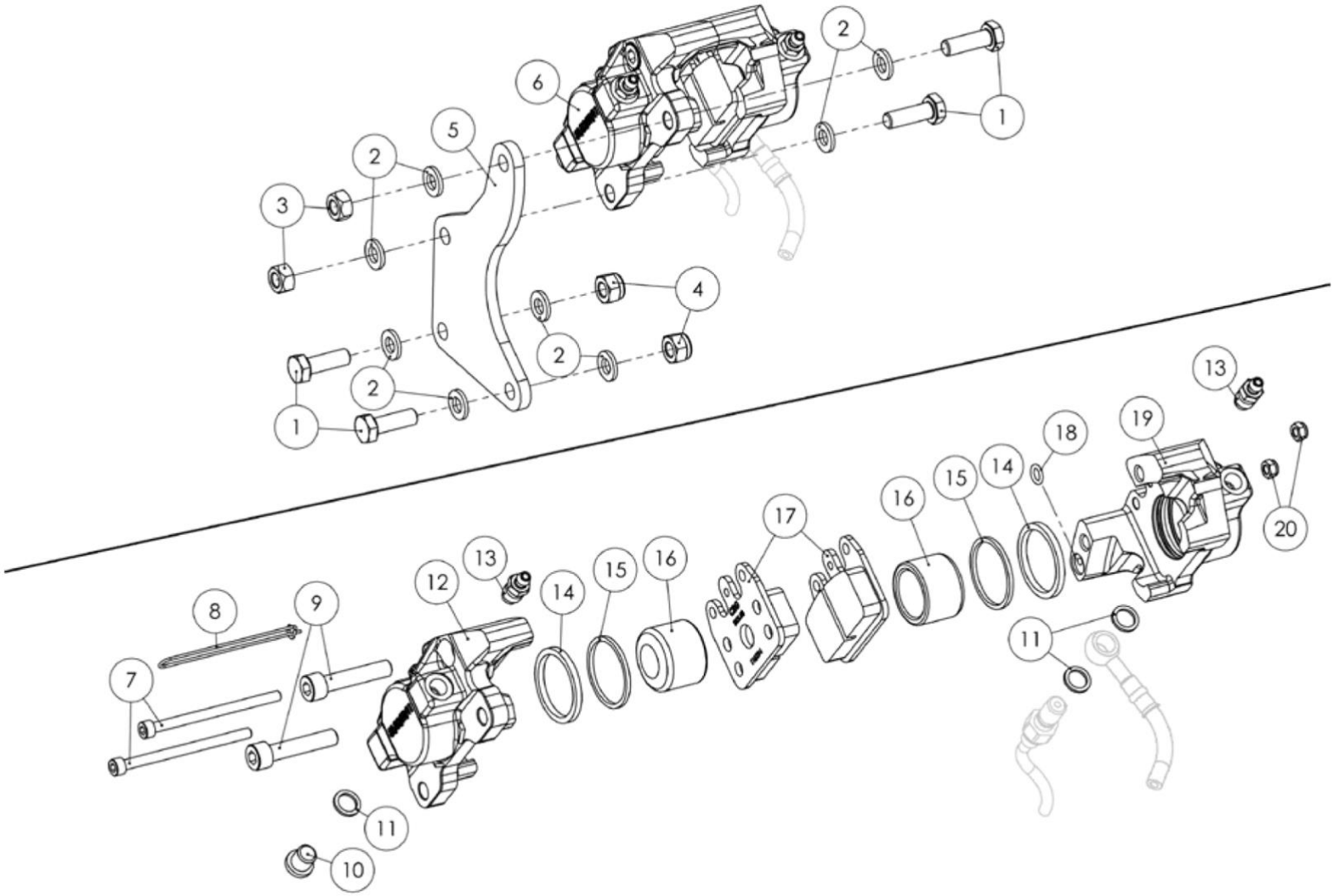

POS.	COD.	DESCRIZIONE	*DESCRIPTION*
1	AFN.00107	Vite m 8x 25 esagonale 5739	*M 8x25 hexagonal head screw*
2	AFN.00133	Rondella 8,5-14x1	*8,5-14x1 washer*
3	AFN.00286	Dado m 8 metalblock	*Nut m 8 metalblock*
4	AFN.00128	Dado m 8 autoblock alto	*Nut m8 high self-locking*
5	FC0.02398	Piastra supporto pinza v05 centbi	*Rear brake caliper v05 support centbi*
6	FM0.02339	Pinza posteriore v05 g comp.centurion	*Rear brake caliper v05 iron co cent*
7	AFN.01679	Vite m 5x 80 cilindrica 5931	*M 5x80 socket head screw*
8	AFS.01682	Spina sicurezza pinza post.v05/v08	*Rear safety pin*
9	AFN.00159	Vite m 8x 45 cilindrica 5931	*M 8x45 socket head screw*
10	SBN.00369	Tappo m10 v09/10	*Caliper cap m10 v09/v10*
11	AFN.00186	Rondella 10,5-14x2 rame	*Copper washer 10,5-14x2*
12	SDN.1678S	Semi pinza posteriore v05 32 sx nera	*Half rear brake caliper v05 32 lf black*
13	SZ0.00184	Spurgo m10 v09/10	*Bleeder m10*
14	AFS.01051	Gommino pinza posteriore ø32 v05/v08	*Rear brake caliper seal ø32*
15	AFS.01681	Gommino parapolvere ø32 v05/v08	*Dust guard seal ø32*
16	SD1.02338	Pistoncino pinza v05 centurion	*Brake caliper v05 piston cent*
17	AFS.04205	Pastiglia freno post.v11 rossa sp.15mm (pinza ø30)	*Rear brake pad v11 15 mm red*
18	AFN.00182	Or pinza 6 x 2 v09/10 posteriore	*Rear o-ring caliper 6x2 v09/v10*
19	SDN.1678D	Semi pinza posteriore v05 32 dx nera	*Half rear brake caliper v05 32 rh black*
20	AFN.00360	Dado m 5 autoblock basso	*Nut m 5 low self-locking*

PINZA FRENO ANTERIORE – FRONT BRAKE CALIPER

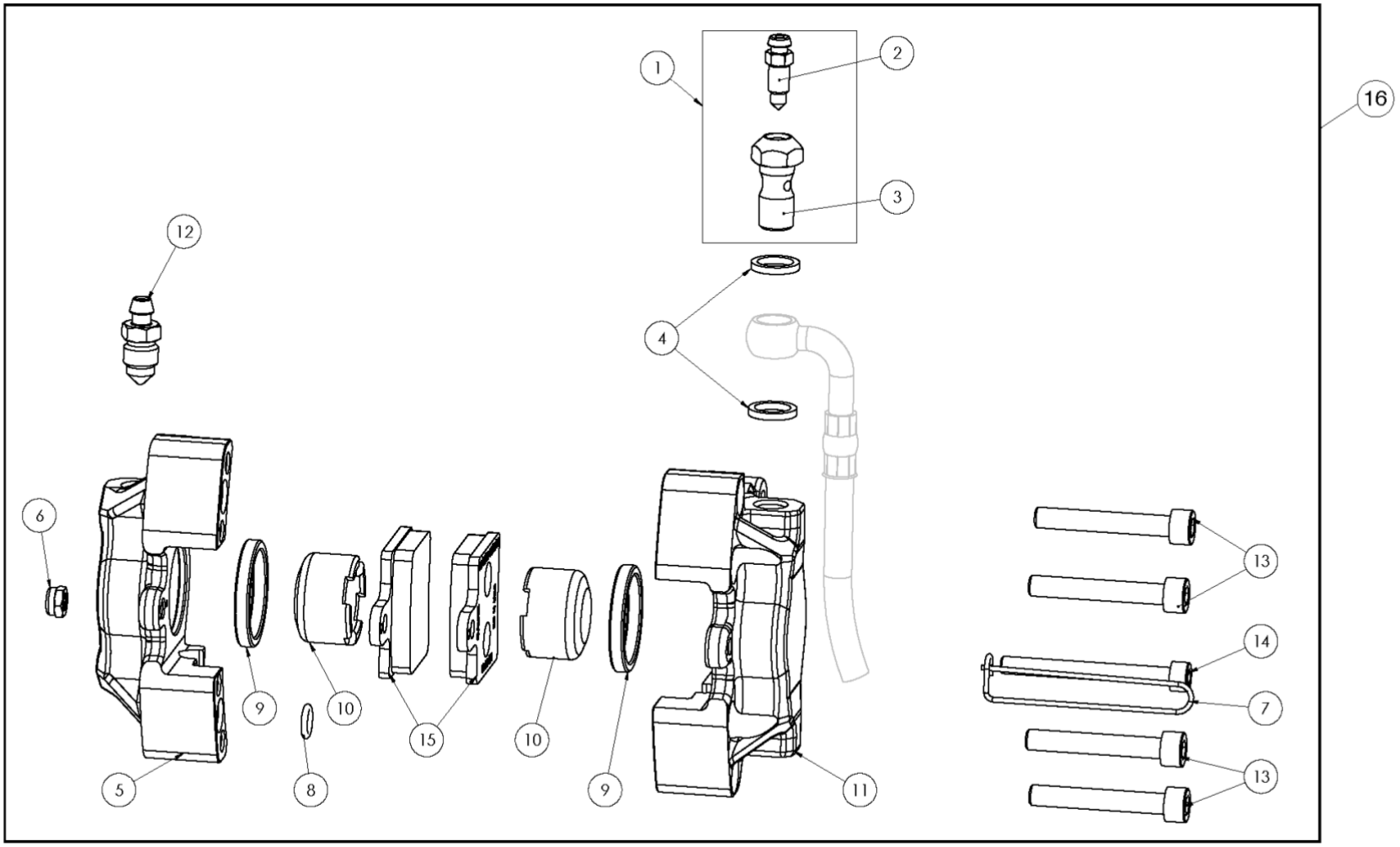

POS.	COD.	DESCRIZIONE	*DESCRIPTION*
1	FM0.00308	Raccordo combinato completo	*Bleeder fitting complete*
2	SZ0.00309	Spurgo m 6 up/v04/v05	*Bleeder m6 up/v04/v05*
3	SZ0.00308	Raccordo combinato m10	*Bleeder fitting m10*
4	AFN.00186	Rondella 10,5-14x2 rame	*Copper washer 10,5-14x2*
5	SDN.0365D	Semi pinza ant.v05/up c/orecchie dx nera	*Front half caliper up/v05 right with fittings*
6	SDN.0364D	Semi pinza ant.v05/up dx nera	*Half caliper up/v05 front right black*
7	AFN.00360	Dado m 5 autoblock basso	*Nut m 5 low self-locking*
8	AFS.00187	Spina sicurezza ant.v09/10	*Front safety pin v09/v10*
9	AFN.00182	Or pinza 6 x 2 v09/10 posteriore	*Rear o-ring caliper 6x2 v09/v10*
10	AFS.00179	Gommino pinza anteriore ø26 up/v05/v09	*Piston seal front d26 up v05/09*
11	SD1.00370	Pistoncino pinza v05-v08 ant(ex up-v04)	*V05/v08 front brake caliper piston*
12	SDN.0365S	Semi pinza ant.v05/up c/orecchie sx nera	*Front half caliper up/v05 left*
13	SDN.0364S	Semi pinza ant.v05/up sx nera	*Half caliper up/v05 front left black*
14	SZ0.00184	Spurgo m10 v09/10	*Bleeder m10*
15	AFN.00368	Vite m 6x 40 cilindrica 5931	*M 6x40 socket head screw*
16	AFN.00367	Vite m 5x 55 cilindrica 5931	*M 5x55 socket head screw*
17	AFS.02997	Pastiglia freno ant. v05-09-11 rossa	*Front brake pad v05-09-11 red*
18	FM0.0363D	Pinza anteriore v09/v11 rossa g dx nero compl.	*Front brake caliper v09/v11 iron rh compl*
19	FM0.0363S	Pinza anteriore v09/v11 rossa g sx nero compl.	*Front brake caliper v09/v11 iron lf compl*

SALVA DISCO - PROTECTION PLATE

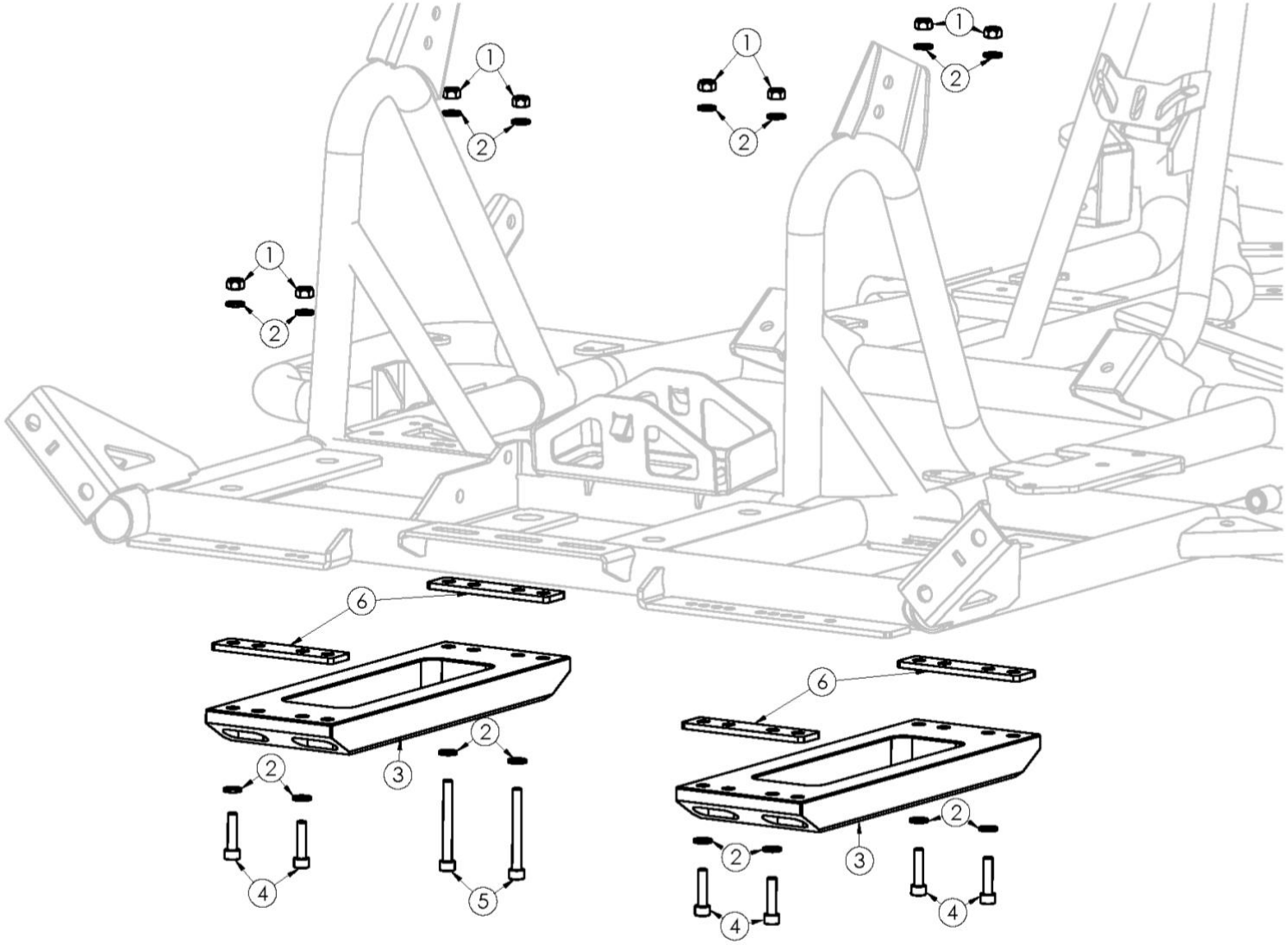

POS.	COD.	DESCRIZIONE	*DESCRIPTION*
1	AFN.00281	Vite m 6x 30 cilindrica 5931	*M 6x30 socket head screw*
2	AFN.00263	Rondella 6,5-18x1,6	*Washer 6,5-18x1,6*
3	SL1.02127	Paradisco parapuleggia cent	*Disc-plate and pulley-plate cent*
4	AFN.02138	Dado m 6 alto grezzo	*Nut m 6 high*
5	AFN.00594	Vite m 6x 60 cilindrica 5931	*M 6x 60 socket head screw*
6	SZ0.01330	Spessore per paradisco cent	*Disc-plate spacer cent*

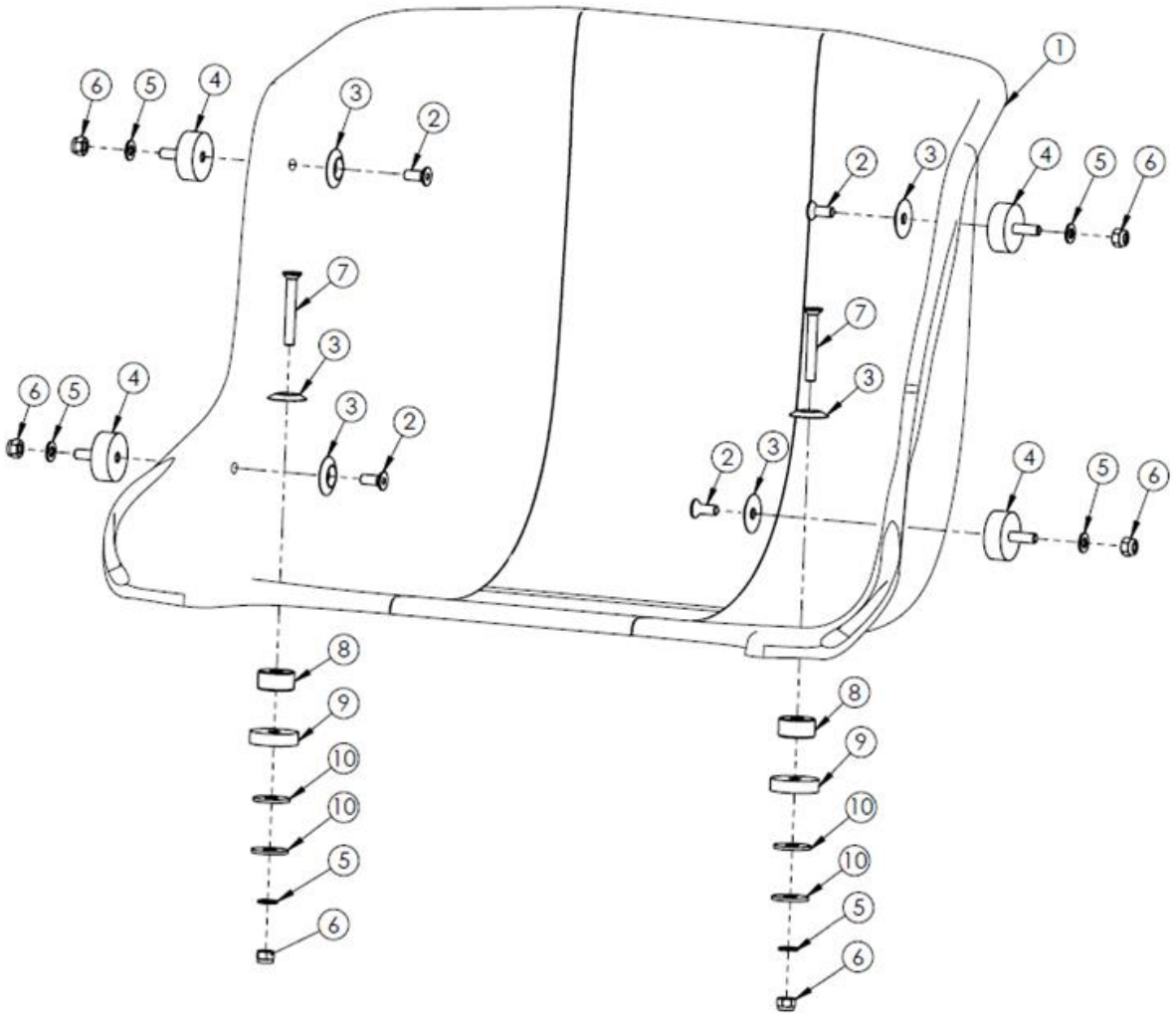
1
2
3
4
5
6
7
8
9
10
10
5
6

POS.	COD.	DESCRIZIONE	*DESCRIPTION*
1	AFS.03526	Sedile bigfoot	*Bigfoot seat*
2	AFN.00290	Vite m 8x20 svasata 5933	*M8x20 countersunk head screw*
3	FAN.00260	Rondella 8 sedile all.nera	*Aluminum seat washer black 8*
4	AFS.00088	Gommino culla marmitta	*Exhaust cradle rubber*
5	AFN.00350	Rondella 8,5-16x1,5	*Washer 8,5-16x1,5*
6	AFN.00128	Dado m 8 autoblock alto	*Nut m8 high self-locking*
7	AFN.00682	Vite m 8x 60 svasata 5933	*M 8x 60 countersunk head screw*
8	AFS.04662	Spessore sedile 10-27x14 in nylon	*Seat lining 10-27x14 nylon*
9	AFS.04662	Spessore sedile 10-27x14 in nylon	*Seat lining 10-27x14 nylon*
10	AFN.00125	Rondella 10,5-30x2,5	*Washer 10,5-30x2,5*

TANICA SERBATOIO – FUEL TANK

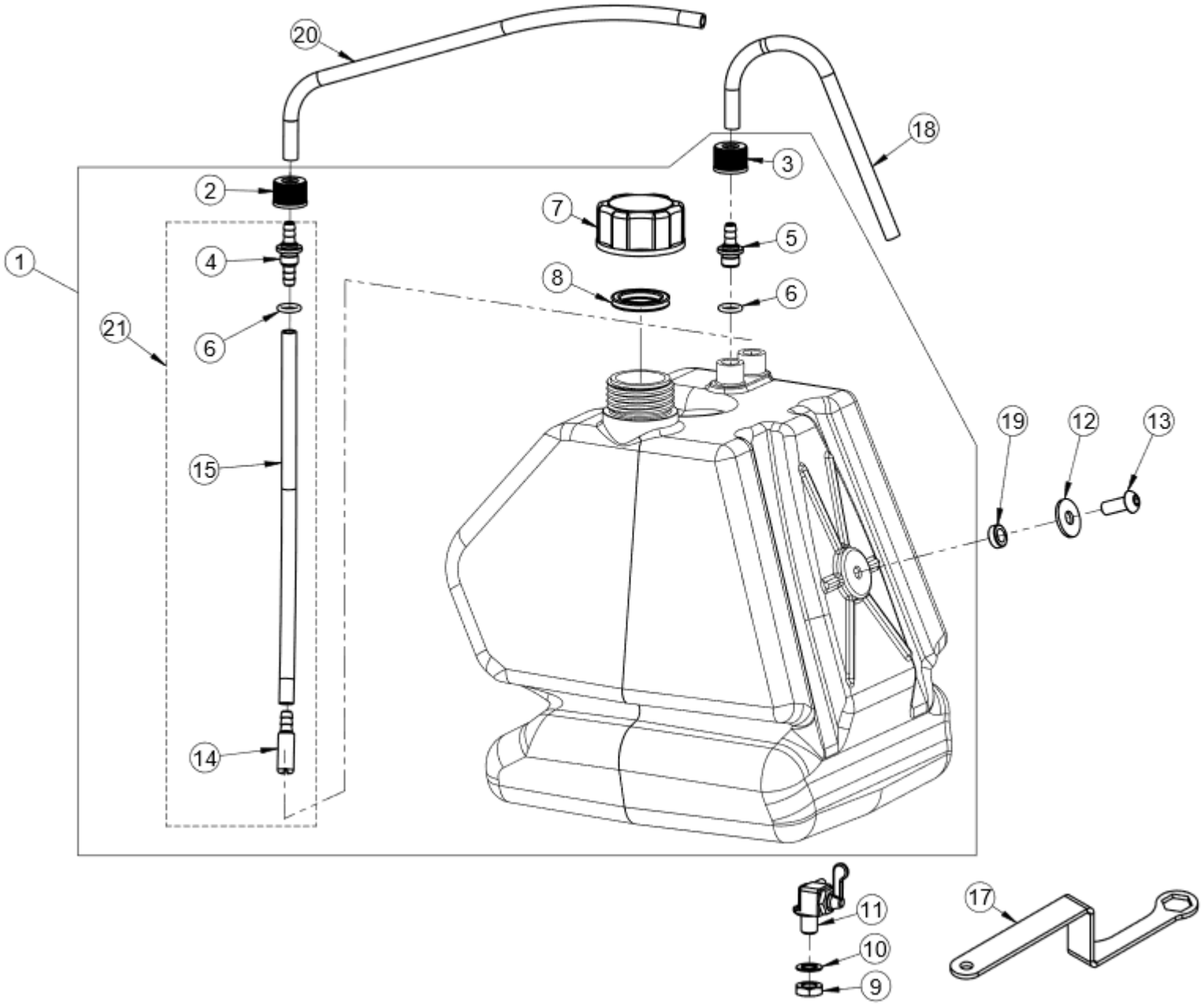

POS.	COD.	DESCRIZIONE	*DESCRIPTION*
1	FM0.00138	Tanica lt.8,5 kf completa bianca	*Fuel tank lt.8,5 complete white*
2	AFS.00142	Tappino pescante tanica (rosso)	*Fuel research fitting tap*
3	AFS.00141	Tappino sfiato tanica (nero)	*Cap fuel tank*
4	SL1.00149	Raccordo pescante tanica	*Fuel tank catch fitting*
5	SL1.00151	Raccordo sfiato	*Bleeder fitting*
6	AFN.01379	Or raccordo tanica	*Fuel tank fitting o-ring*
7	AFS.00143	Tappo tanica	*Fuel tank cap*
8	AFN.00144	Guarnizione tappo tanica	*Fuel tank cap ring*
9	AFS.00325	Dado raccordo tanica m10	*Nut fitting tank m10*
10	AFN.00323	Rondella 10 -16x1 fibra	*Fiber washer 10-16x1*
11	AFS.03349	Rubinetto ritorno benzina cent	*Return valve petrol cent*
12	AFN.02415	Rondella 8,5-24x2	*8,5-24x2 washer*
13	AFN.00379	Vite m 8x 20 bombata 7380	*M 8x20 convex head screw*
14	SL1.00147	Pescante	*Fuel tank catch*
15	SL1.00322	Tubo pescante tanica lt.8,5 (cm.24)	*Fuel pipe 24cm*
17	SZ0.03729	Chiave 17 rubinetto serbatoio (dado interno)	*17mm wrench for fuel tank tap*
18	AMS.04241	Tubo benzina al metro 5x10,5 centurion	*Fuel pipe per meter cent 5x10,5*
19	FBN.00252	Spessore 8,5-14x 5 barretta	*Rod spacer 8,5-14x5 track rod*
20	AMS.00139	Tubo benzina al metro	*Fuel pipe per meter*
21	CRG.00147	Pescante tanica lt.8,5 completo	*Fuel tank lt.8,5 suction fitting*

BALESTRA – LEAF SPRING

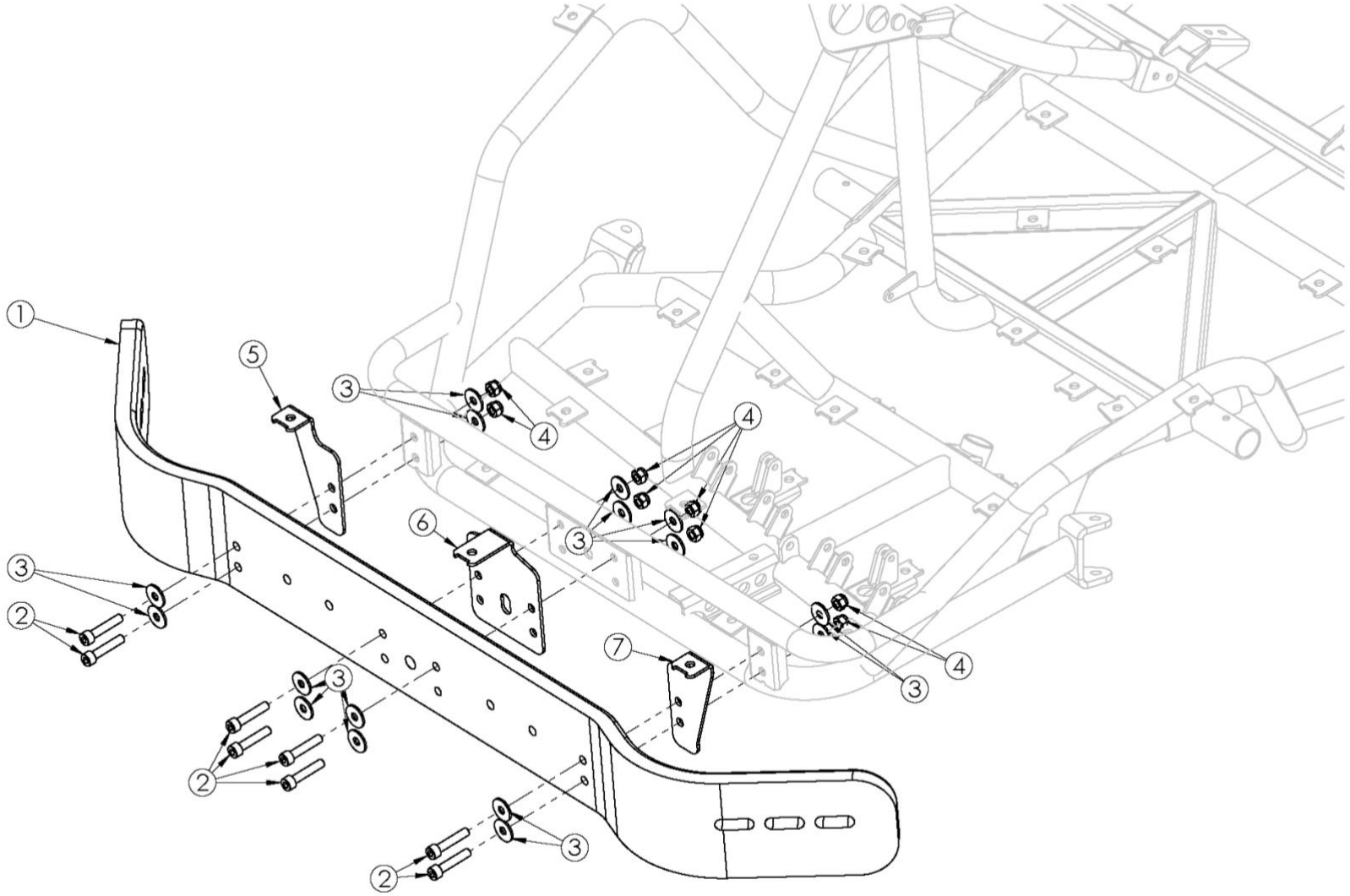

POS.	COD.	DESCRIZIONE	*DESCRIPTION*
1	AFS.0216109	Balestra anteriore centrale centurion	*Front-central leaf spring cent*
2	AFN.03781	Vite m 8x 40 cilindrica 12.9 4762	*M 8x 40 socket head screw*
3	AFN.02415	Rondella 8,5-24x2	*8,5-24x2 washer*
4	AFN.00128	Dado m 8 autoblock alto	*Nut m8 high self-locking*
5	SZA.02240	Piastra supporto spoiler(a) centbi	*Front spoiler plate support(a)centbi*
6	SZB.02240	Piastra supporto spoiler(b) centbi	*Front spoiler plate support(b)centbi*
7	SZC.02240	Piastra supporto spoiler(c) centbi	*Front spoiler plate support(c) centbi*

PROTEZIONE ANTERIORE - FRONT PROTECTION – Big Silentblock

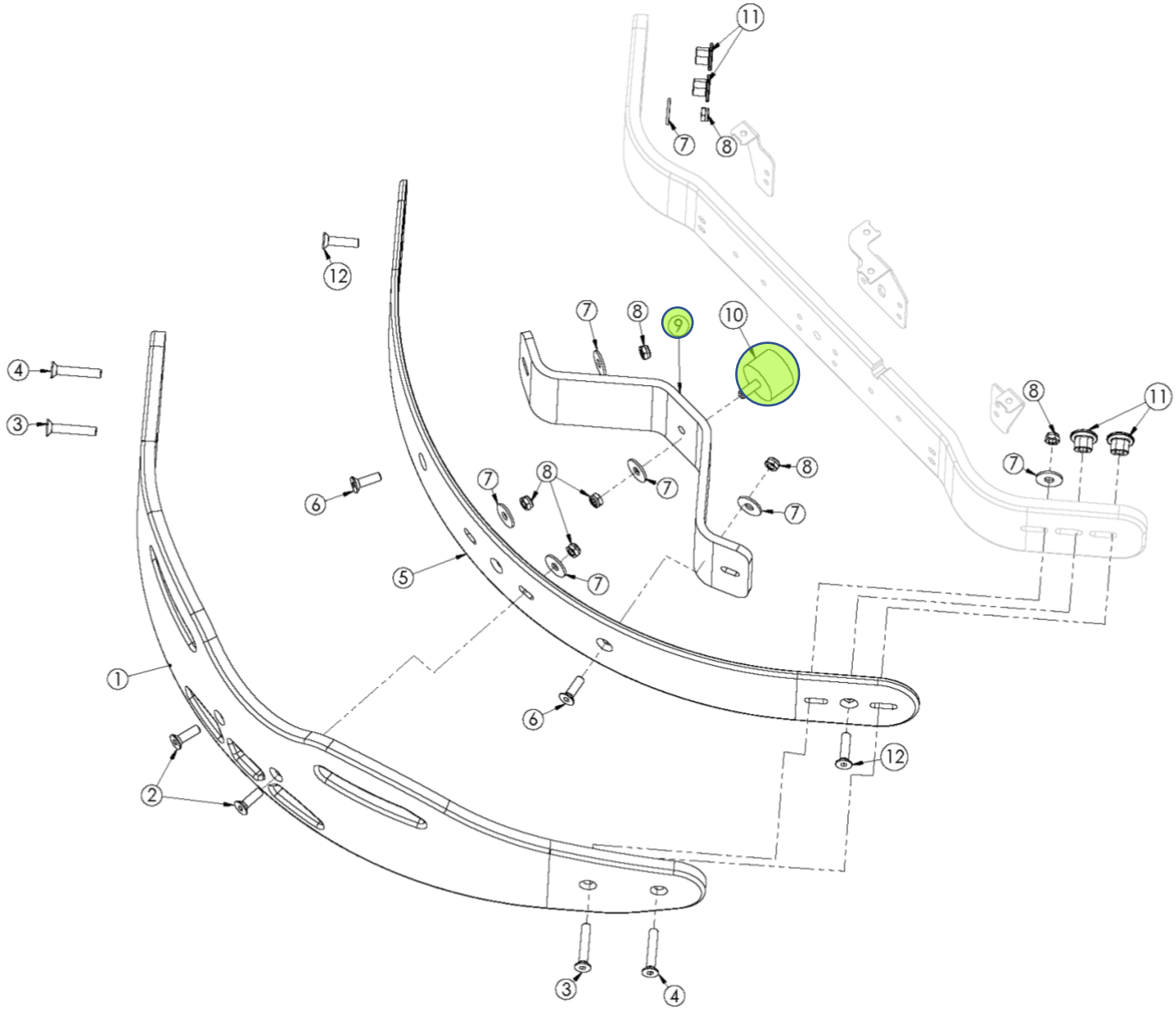

POS.	COD.	DESCRIZIONE	*DESCRIPTION*
1	AFS.04911	Fascia paraurti anteriore cent con protez. pedali	*Centurion front buffer band with side protection*
2	AFN.02294	Vite m12x 50 svasata 5933	*M12x50 countersunk head screw*
3	AFN.02373	Vite m12x 80 svasata 5933	*M12x80 countersunk head screw*
4	AFN.00676	Vite m12x 60 svasata 5933	*M12x60 countersunk head screw*
5	AFS.0216305	Fascia paracolpi centrale ant.int cent	*Int.front-central buffer band cent*
6	AFN.02293	Vite m12x 40 svasata 5933	*M12x40 countersunk head screw*
7	AFN.02416	Rondella 12 -36x3	*12-36x3 washer*
8	AFN.02394	Dado m12 autoblock basso	*M12 low self-locking nut*
9	AFS.0315402	Balestra anteriore centurion	*Front leaf spring cent*
10	AFS.02509	Silentblock m+f m12 ø60x40 centurion	*M12 60x40 silentblock m+f cent*
11	SZ0.00701	Dado m12 ovale 14x25	*Special nut m12 14x25*
12	AFN.03610	Vite m12x 35 svasata 5933	*M12x 35 countersunk head screw*

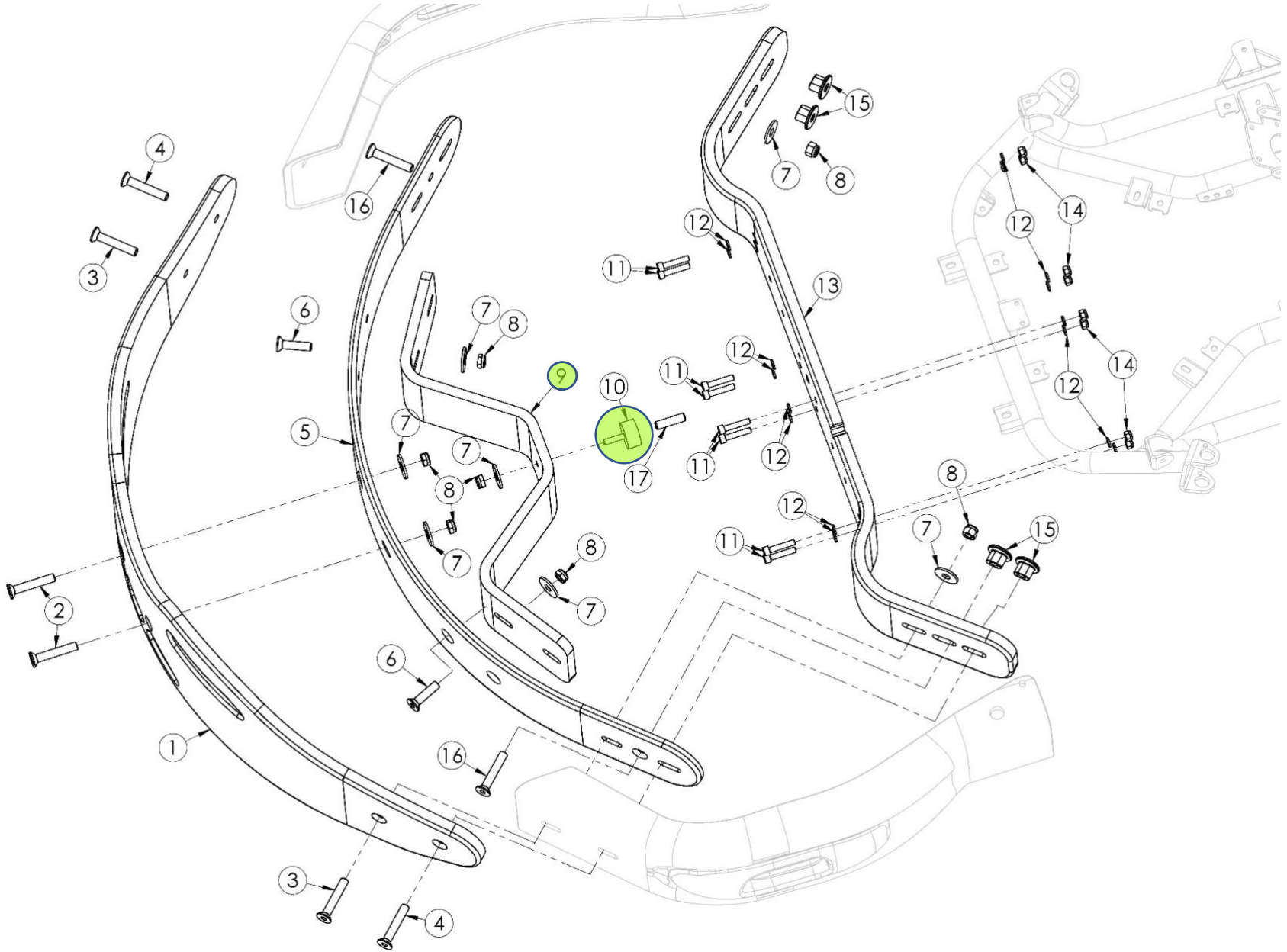
1
2
3
4
5
6
7
8
9
10
11
12
13
14
15
16
17

POS.	COD.	DESCRIZIONE	DESCRIPTION
1	AFS.04911	Fascia paraurti anteriore cent con protez. pedali	*Centurion front buffer band with side protection*
2	AFN.02294	Vite m12x 50 svasata 5933	*M12x50 countersunk head screw*
3	AFN.02373	Vite m12x 80 svasata 5933	*M12x80 countersunk head screw*
4	AFN.00676	Vite m12x 60 svasata 5933	*M12x60 countersunk head screw*
5	AFS.0216305	Fascia paracolpi centrale ant.int cent	*Int.front-central buffer band cent*
6	AFN.02293	Vite m12x 40 svasata 5933	*M12x40 countersunk head screw*
7	AFN.02416	Rondella 12 -36x3	*12-36x3 washer*
8	AFN.02394	Dado m12 autoblock basso	*M12 low self-locking nut*
9	AFS.0315402	Balestra anteriore centurion	*Front leaf spring cent*
10	AFS.04894	Silentblock m+f m 8 ø40x20 speciale m8x33 cent	*Silentblock m+f m 8x33 ø40x20 cent*
11	AFN.00132	Vite m 8x 40 cilindrica 5931	*M8x40 socket head screw*
12	AFN.00108	Rondella 8,5-18x2	*Washer 8,5-18x2*
13	AFS.0216109	Balestra anteriore centrale centurion	*Front-central leaf spring cent*
14	AFN.00128	Dado m 8 autoblock alto	*Nut m8 high self-locking*
15	SZ0.00701	Dado m12 ovale 14x25	*Special nut m12 14x25*
16	AFN.03610	Vite m12x 35 svasata 5933	*M12x 35 countersunk head screw*
17	SZ0.03466	Perno silentblock ø12x45 cent	*Centruion silentblock pin ø12x45*

PROTEZIONE POSTERIORE - REAR PROTECTION

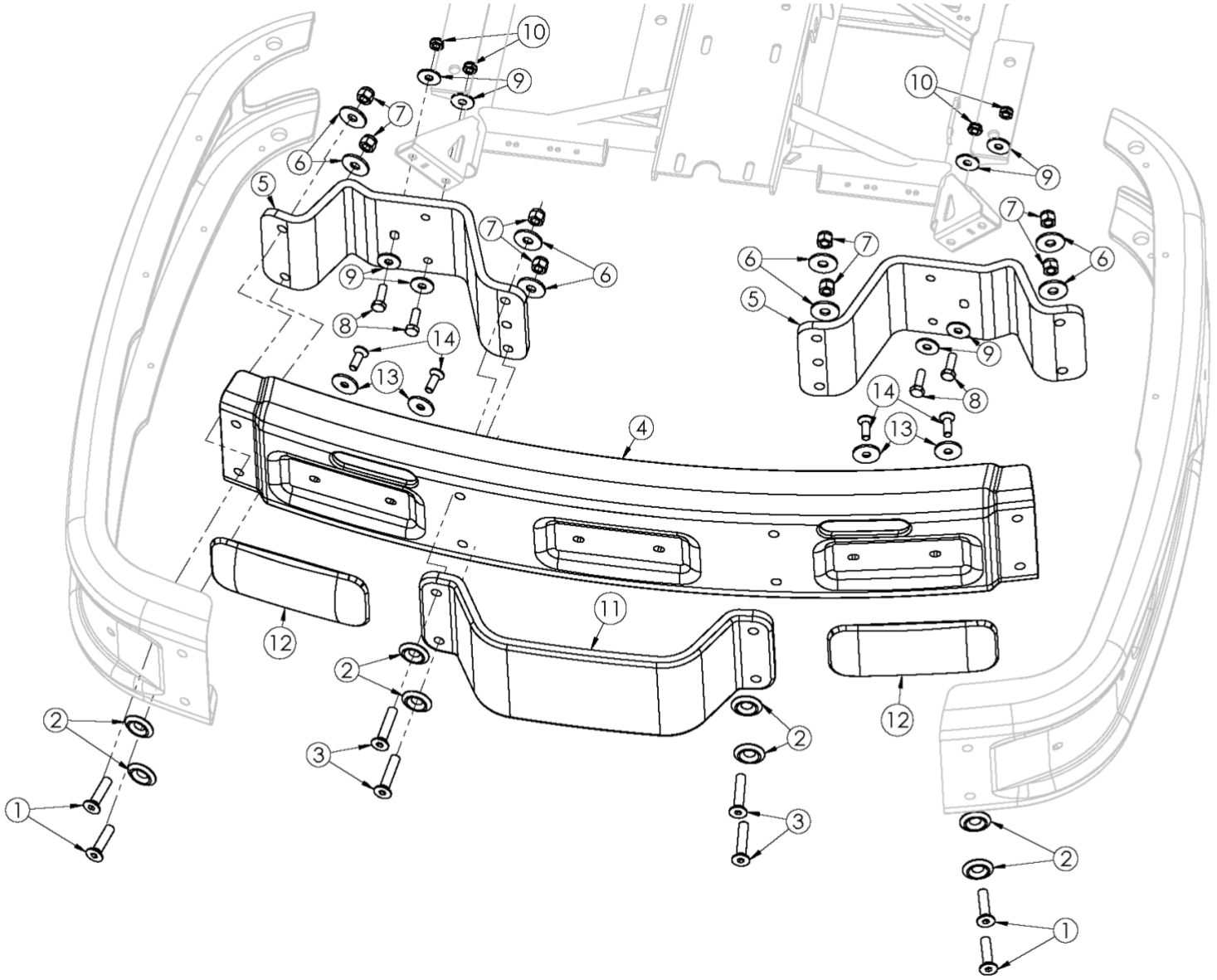

POS.	COD.	DESCRIZIONE	*DESCRIPTION*
1	AFN.02294	Vite m12x 50 svasata 5933	*M12x50 countersunk head screw*
2	SZ0.02367	Rondella 12 svasata bullone cent	*Centurion countersunk bolt m12 washer*
3	AFN.00676	Vite m12x 60 svasata 5933	*M12x60 countersunk head screw*
4	AFS.02160	Fascia paracolpi centrale post.centurion	*Rear-central buffer band cent*
5	AFS.02166	Balestra posteriore centurion	*Rear leaf spring cent*
6	AFN.02416	Rondella 12 -36x3	*12-36x3 washer*
7	AFN.02394	Dado m12 autoblock basso	*M12 low self-locking nut*
8	AFN.02292	Vite m10x 30 esagonale 5739	*M10x 30 hexagonal head screw*
9	AFN.00125	Rondella 10,5-30x2,5	*Washer 10,5-30x2,5*
10	AFN.02393	Dado m10 autoblock alto	*Nut m10 high self-locking*
11	AFS.02473	Balestra posteriore centrale centurionbi	*Rear leaf spring centbi*
12	AFS.00570	Placca paracolpi posteriore cent arancione	*Plastic plate rear cent*
13	SL1.03222	Rondella 10 svasata	*Countersunk washer m10*
14	TSV.10X030	Vite m10x 30 svasata 5933	*M10x 30 countersunk head screw*

PROTEZIONE LATERALE DESTRA - RIGHT SIDE PROTECTION

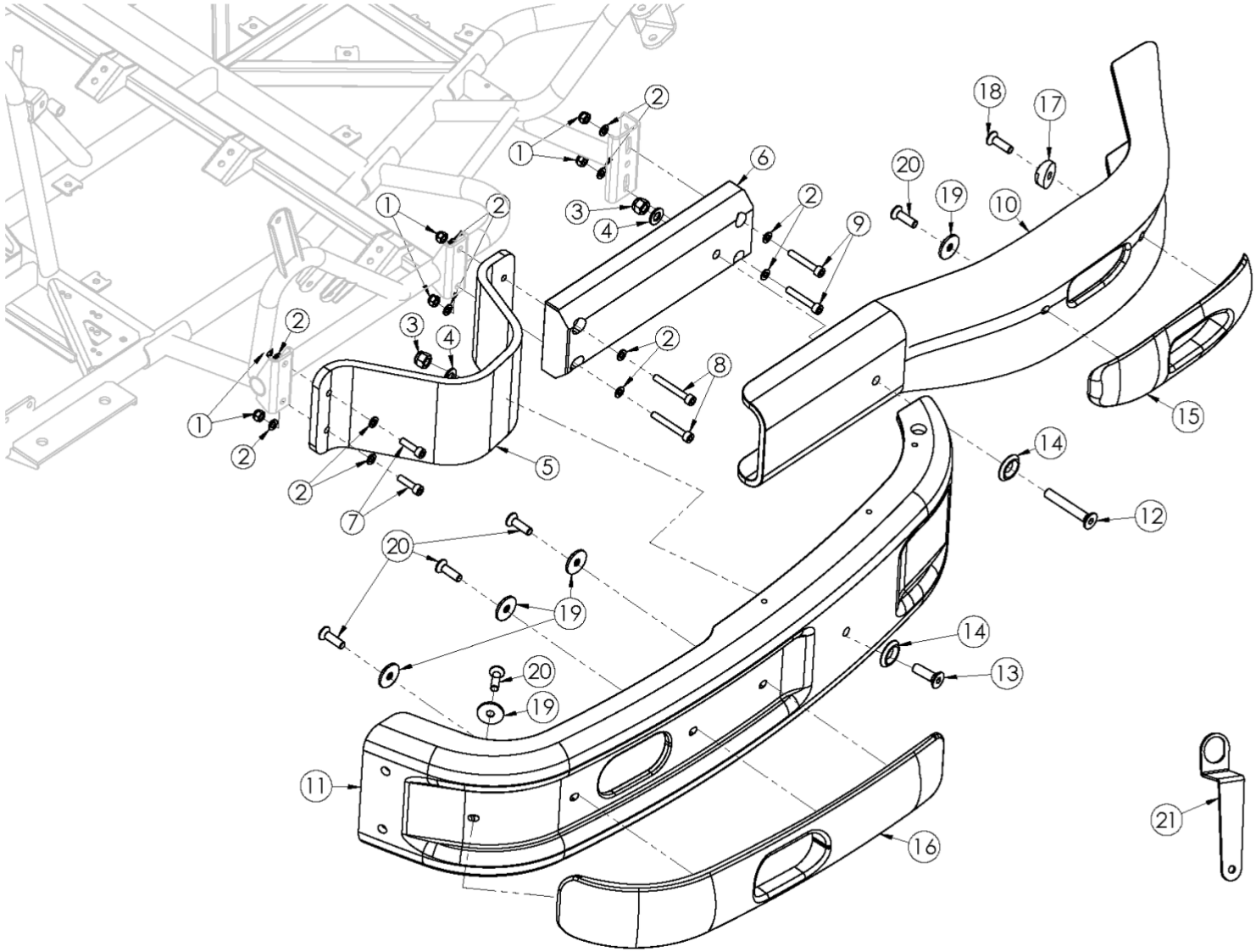

POS.	COD.	DESCRIZIONE	*DESCRIPTION*
1	AFN.00128	Dado m 8 autoblock alto	*Nut m8 high self-locking*
2	AFN.02415	Rondella 8,5-24x2	*8,5-24x2 washer*
3	AFN.02364	Dado m12 autoblock alto	*M12 high self-locking nut*
4	AFN.02416	Rondella 12 -36x3	*12-36x3 washer*
5	AFS.3158D	Balestra laterale dx cent 2014	*Side leaf spring rh cent*
6	SL1.02321	Piastra base protezione centbi	*Protection base plate centbi*
7	AFN.00827	Vite m 8x 30 cilindrica 5931	*M 8x30 socket head screw*
8	AFN.02291	Vite m 8x 60 esagonale 5739	*M 8x 60 hexagonal head screw*
9	AFN.00681	Vite m 8x 50 cilindrica 5931	*M8x50 hex socket screw*
10	AFS.02723	Fascia paracolpi ant. lat. centbi - centmini	*Front side leaf band centbi*
11	AFS.2160DS	Fascia paracolpi lat. post. dx/sx cent	*Centurion rear side buffer band rh/lf*
12	AFN.02373	Vite m12x 80 svasata 5933	*M12x80 countersunk head screw*
13	AFN.02293	Vite m12x 40 svasata 5933	*M12x40 countersunk head screw*
14	SZ0.02367	Rondella 12 svasata bullone cent	*Centurion countersunk bolt m12 washer*
15	AFS.01285	Placca paracolpi laterale ant.cent arancione	*Plastic plate front side cent*
16	AFS.01455	Placca paracolpi laterale post.cent arancione	*Plastic plate rear side cent*
17	SL1.03223	Rondella 10 svasata inclinata	*Countersunk washer m10 inclin*
18	TSV.10X035	Vite m10x 35 svasata 5933	*M10x35 countersunk head screw*
19	SL1.03222	Rondella 10 svasata	*Countersunk washer m10*
20	TSV.10X030	Vite m10x 30 svasata 5933	*M10x 30 countersunk head screw*
21	SZ0.03227	Chiave rondella svasata inclinata	*Countersunk washer key(bumper tool)*

PROTEZIONE LATERALE SINISTRA – LEFT SIDE PROTECTION

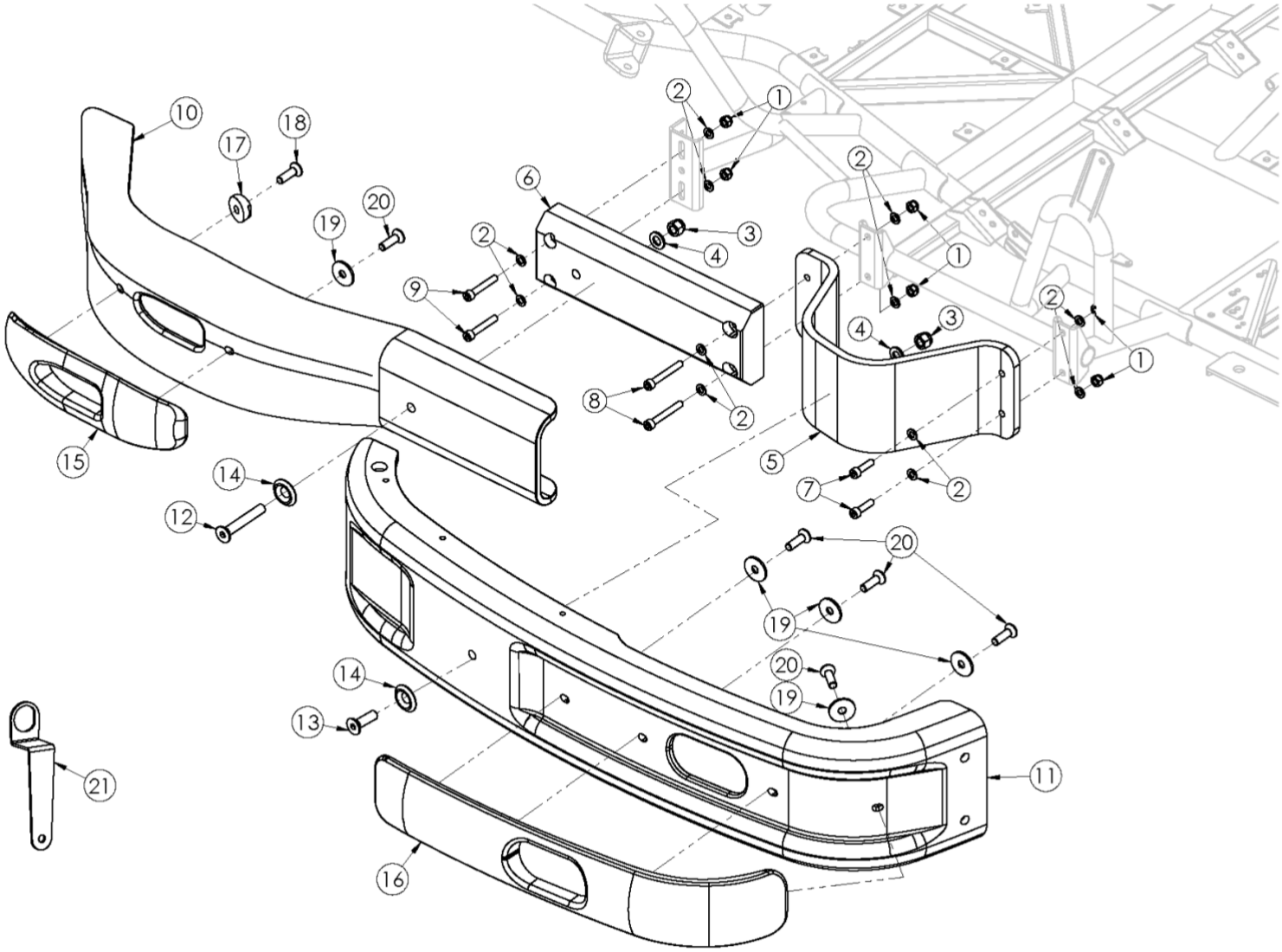

POS.	COD.	DESCRIZIONE	*DESCRIPTION*
1	AFN.00128	Dado m 8 autoblock alto	*Nut m8 high self-locking*
2	AFN.02415	Rondella 8,5-24x2	*8,5-24x2 washer*
3	AFN.02364	Dado m12 autoblock alto	*M12 high self-locking nut*
4	AFN.02416	Rondella 12 -36x3	*12-36x3 washer*
5	AFS.2167S	Balestra laterale sx centurion	*Side leaf spring lf cent*
6	SL1.02321	Piastra base protezione centbi	*Protection base plate centbi*
7	AFN.00827	Vite m 8x 30 cilindrica 5931	*M 8x30 socket head screw*
8	AFN.02291	Vite m 8x 60 esagonale 5739	*M 8x 60 hexagonal head screw*
9	AFN.00681	Vite m 8x 50 cilindrica 5931	*M8x50 hex socket screw*
10	AFS.02723	Fascia paracolpi ant. lat. centbi - centmini	*Front side leaf band centbi*
11	AFS.2160DS	Fascia paracolpi lat. post. dx/sx cent	*Centurion rear side buffer band rh/lf*
12	AFN.02373	Vite m12x 80 svasata 5933	*M12x80 countersunk head screw*
13	AFN.02293	Vite m12x 40 svasata 5933	*M12x40 countersunk head screw*
14	SZ0.02367	Rondella 12 svasata bullone cent	*Centurion countersunk bolt m12 washer*
15	AFS.01285	Placca paracolpi laterale ant.cent arancione	*Plastic plate front side cent*
16	AFS.01455	Placca paracolpi laterale post.cent arancione	*Plastic plate rear side cent*
17	SL1.03223	Rondella 10 svasata inclinata	*Countersunk washer m10 inclin*
18	TSV.10X035	Vite m10x 35 svasata 5933	*M10x35 countersunk head screw*
19	SL1.03222	Rondella 10 svasata	*Countersunk washer m10*
20	TSV.10X030	Vite m10x 30 svasata 5933	*M10x 30 countersunk head screw*
21	SZ0.03227	Chiave rondella svasata inclinata	*Countersunk washer key(bumper tool)*

SPOILER ANTERIORE – FRONT SPOILER

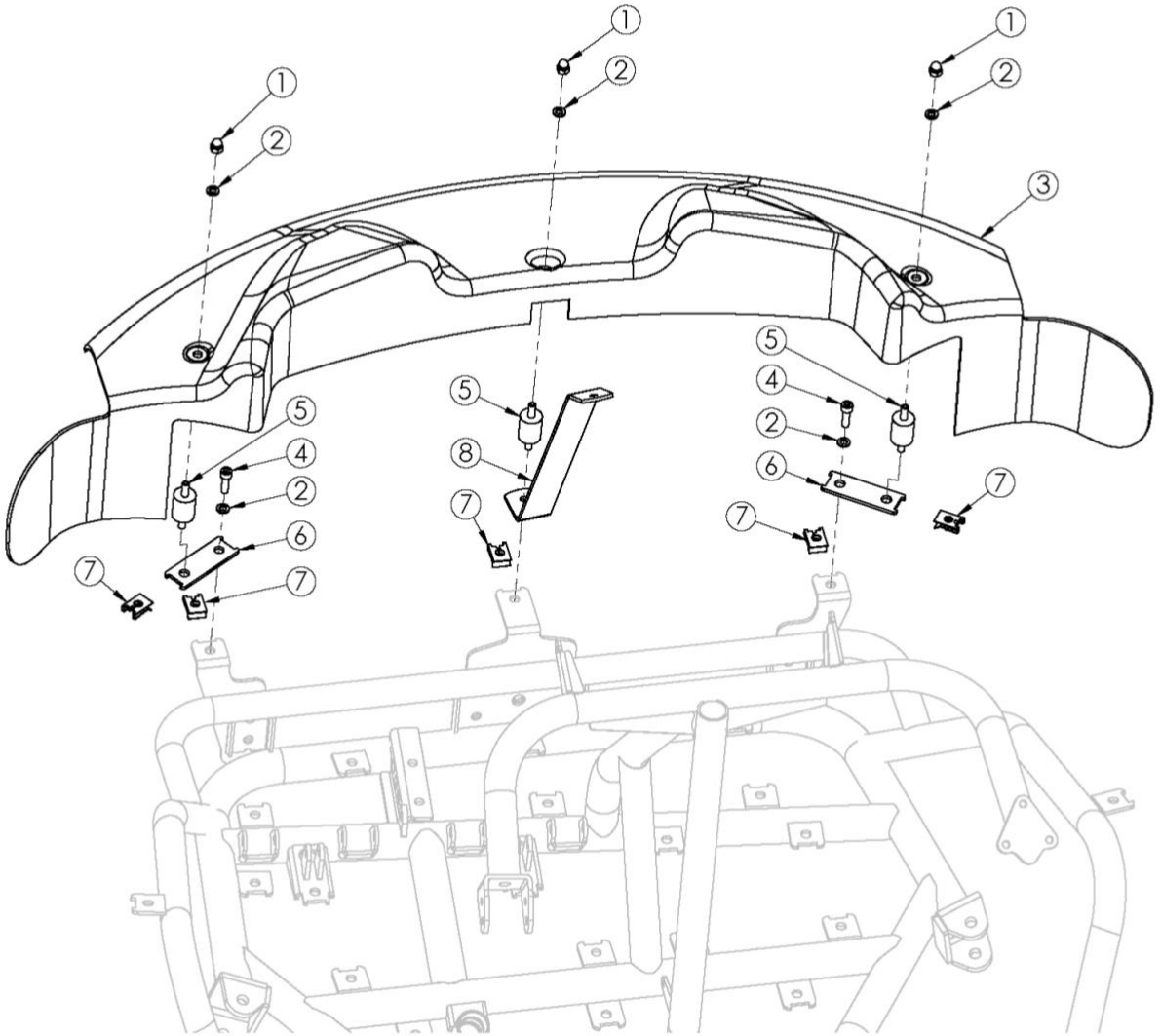

POS.	COD.	DESCRIZIONE	*DESCRIPTION*
1	SBN.02376	Dado m 6 cieco zincato cent	*Blind nut m 6 black cent*
2	SAN.00249	Rondella 6 svasata nera	*Washer 6 countersunk black*
3	AFS.04455	Spoiler anteriore hercules	*Front spoiler hercules*
4	AFN.00261	Vite m 6x 20 svasata 5933	*M6x20 countersunk head screw*
5	AFS.02296	Silentblock m+m m 6 ø25x20 centurion	*Silentblock m+m m 6 25x20 cent*
6	SZ0.02511	Piastra silentblock spoiler dx/sx cent	*Spoiler rh/lf silentblock plate cent*
7	AFS.02327	Clips prestola m6 centurion	*enturion clips m6 for fitting*

MARMITTA - EXHAUST

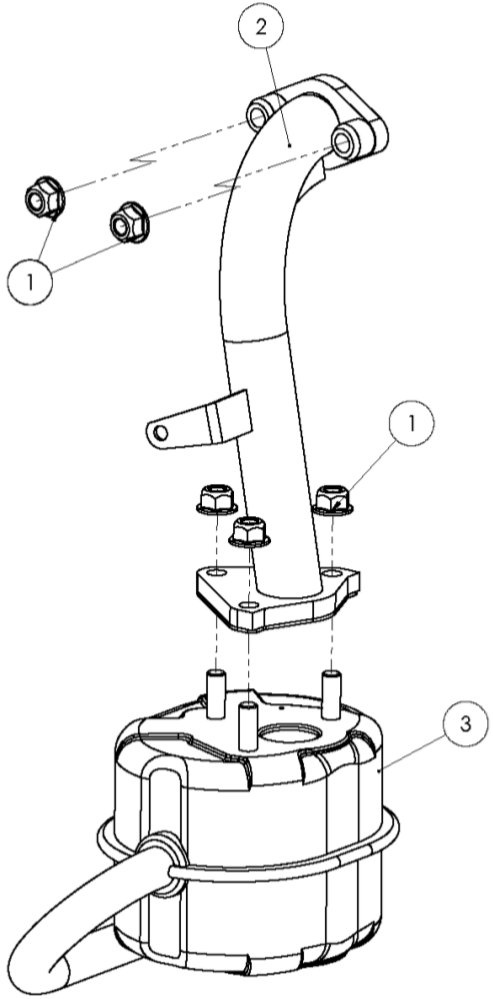

POS.	COD.	DESCRIZIONE	*DESCRIPTION*
1	AFN.00520	Dado m 8 autofrenante flangiato in rame	*M8 copper brake-block*
2	SZ0.02734	Collettore scarico centurionbi	*Exhaust manifold centbi*
3	FVN.03935	Silenziatore scarico centurionbi verniciato	*Exhaust centbi*

MONTAGGIO MOTORE - ENGINE MOUNTING

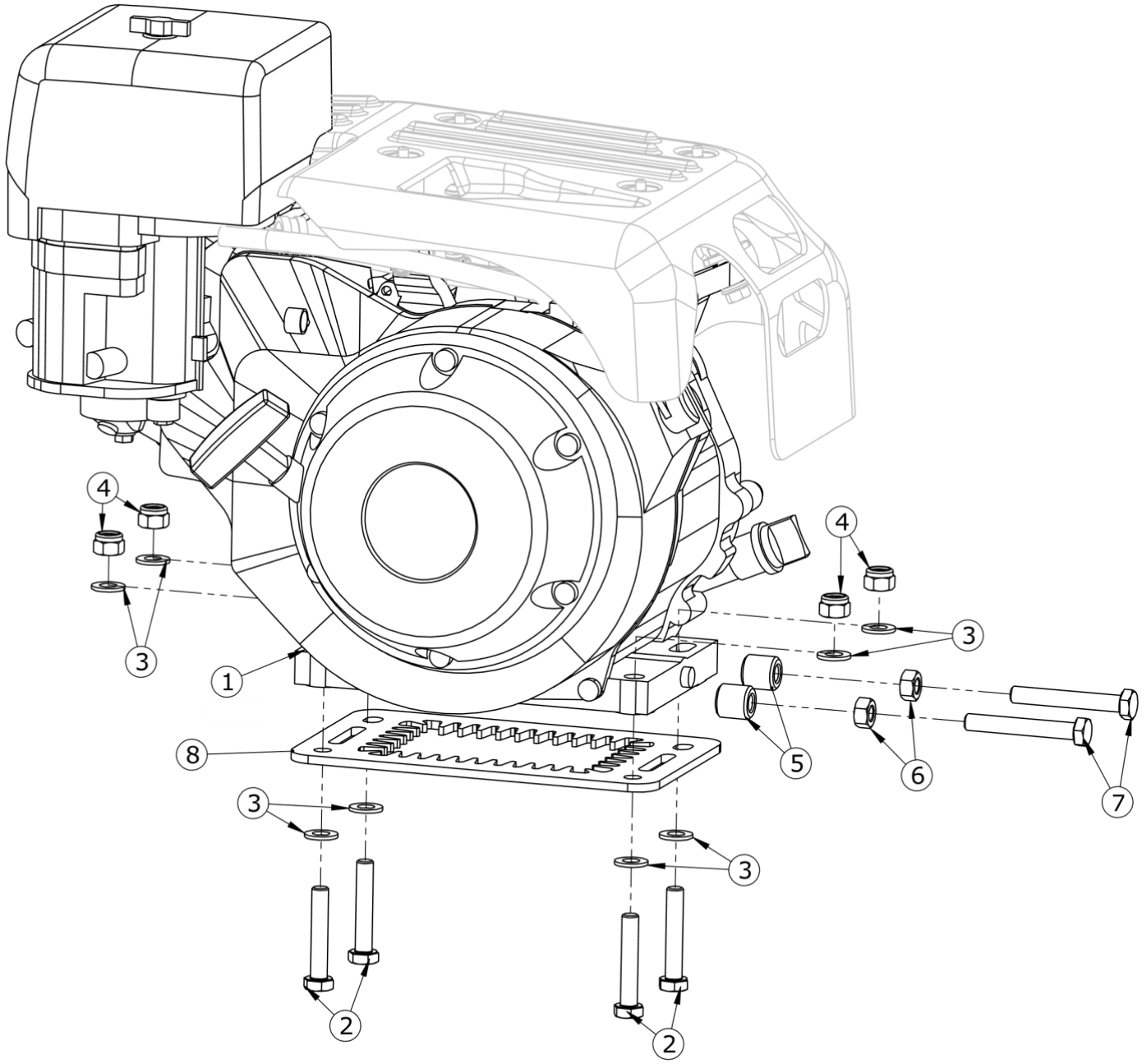

POS.	COD.	DESCRIZIONE	*DESCRIPTION*
1	AFS.03627	Motore honda gx270 no tanica 12v/25w rdg4	*Honda engine gx270 w/o fuel tank*
2	AFN.00982	Vite m10x 55 esagonale 5739	*M10x 55 hexagonal head screw*
3	SZ0.02400	Rondella 10,5-28x4 motore-tend. cent	*Washer spacer 10,5-28x4,5 cent*
4	AFN.02393	Dado m10 autoblock alto	*Nut m10 high self-locking*
5	FL1.03191	Puntale plastica tendimotore cent	*Plastic pivot for engine tightener cent*
6	AFN.00255	Dado m10	*Nut m10*
7	AFN.02149	Vite m10x 70 esagonale 5739	*M10x 70 hexagonal head screw*
8	SZ0.04790	Smorzatore sottomotore gx270	*Gx270 vibration absorber plate*

TENDICATENA - CHAIN TIGHTENER

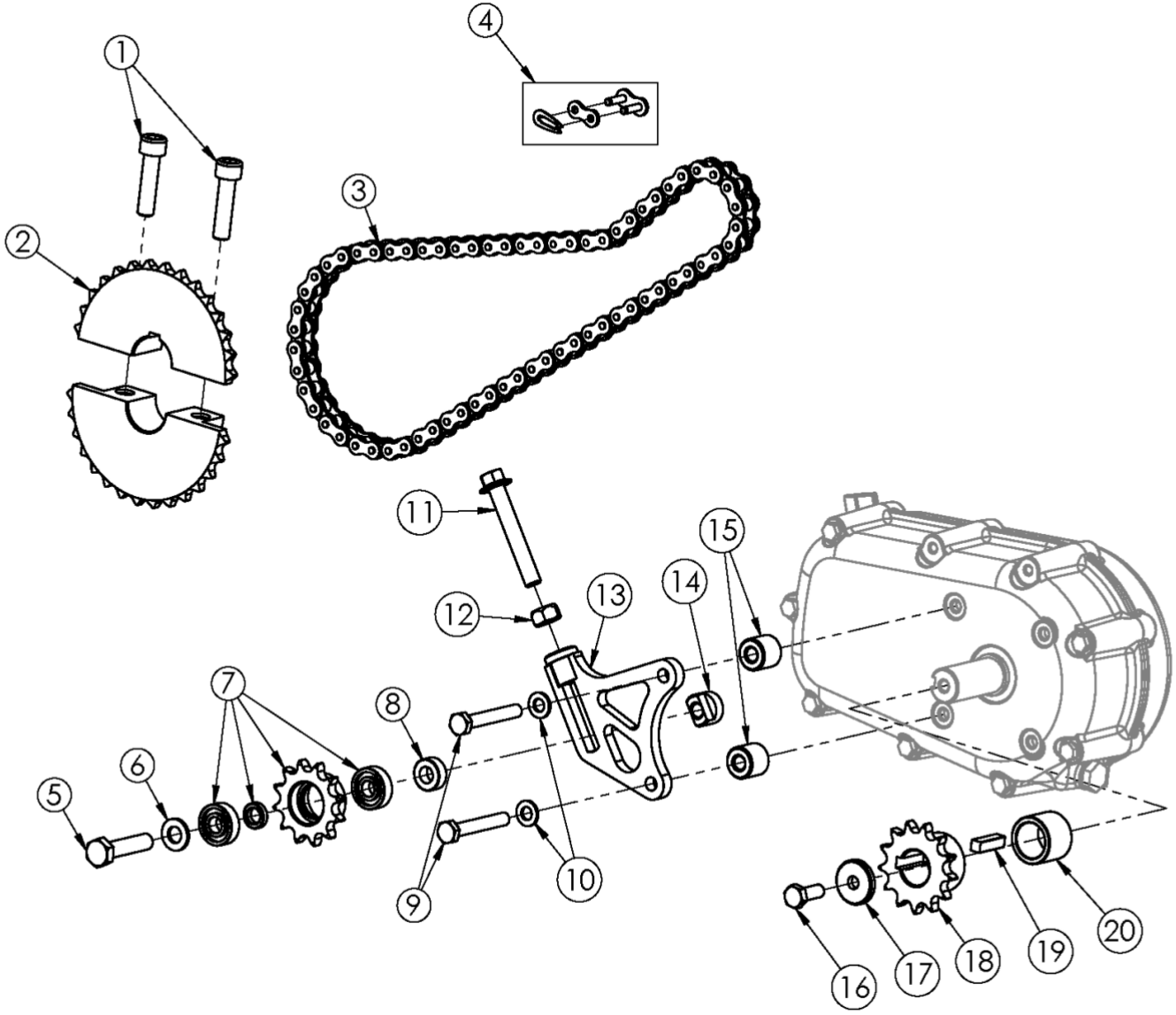

POS.	COD.	DESCRIZIONE	*DESCRIPTION*
1	AFN.00132	Vite m 8x 40 cilindrica 5931	*M8x40 socket head screw*
2	FM0.04407	Corona z26 d30 cent crg con viti comp.	*Sprocket z26 d30 CENT*
3	AMS.00671	Catena al metro kz standard	*Kz chain per meter std*
4	AMS.00779	Maglia congiunzione catena kz	*Joining link for chain kz*
5	TES.10X045	Vite m10x 45 esagonale	*M10x 45 hexagonal head screw*
6	AFN.01637	Rondella 10,5-20x2	*Washer 10,5-20x2*
7	FM0.01293	Pignone tendicatena z12 cent cusc.ø12 comp	*Chain tightener sprocket 12t assy cent*
8	SZ0.04016	Spessore 12-20x11,3 tendicatena cent	*Chain tightener washer 10x20x11,3*
9	AFN.00349	Vite m 8x 35 esagonale 5739	*M 8x35 hexagonal head screw*
10	AFN.00108	Rondella 8,5-18x2	*Washer 8,5-18x2*
11	AFN.02149	Vite m10x 70 esagonale 5739	*M10x 70 hexagonal head screw*
12	AFN.00255	Dado m10	*Nut m10*
13	SZ0.02691	Piastra tendicatena centurionbi	*Tightener plate centbi*
14	SZ0.02720	Dado perno tendicatena centurionbi	*Tightener pivot nut centbi*
15	SZ0.02721	Bussola tendicatena centurionbi	*Tightener bushing centbi*
16	AFN.00307	Vite m 8x 30 esagonale 5739	*M 8x30 hexagonal head screw*
17	SZ0.02365	Rondella pignone x gx270 centurion	*Sprocket washer for gx270 centurion*
18	SZ0.00668	Pignone motore z13 centurion	*Engine gear 13t cent*
19	SL1.02550	Chiavetta 7x7x33 centurion	*Key 7x7x33 cent*
20	SZ0.01292	Spessore pignone honda 270 cent	*Gear spacer honda 270 cent*

CARENA DESTRA - RIGHT SIDE FAIRING

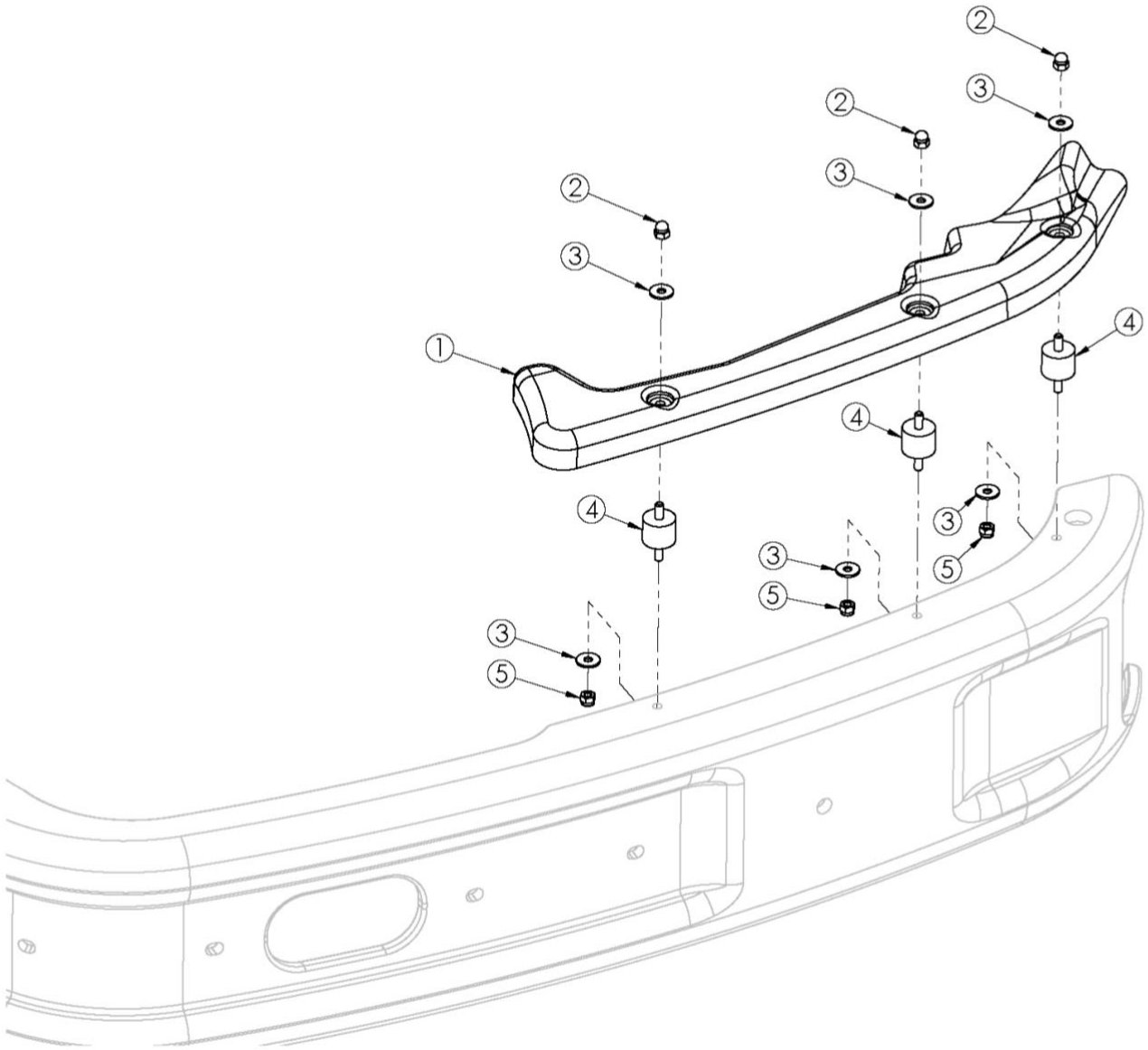

POS.	COD.	DESCRIZIONE	*DESCRIPTION*
1	AFS.4841D	Carena laterale centurion 2019 dx	*Side fairing rh cent*
2	SBN.02376	Dado m 6 cieco zincato cent	*Blind nut m 6 black cent*
3	AFN.00263	Rondella 6,5-18x1,6	*Washer 6,5-18x1,6*
4	AFS.02296	Silentblock m+m m 6 ø25x20 centurion	*Silentblock m+m m 6 25x20 cent*
5	AFN.00264	Dado m 6 autoblock alto	*Nut m6 high self-locking*

CARENA SINISTRA - LEFT SIDE FAIRING

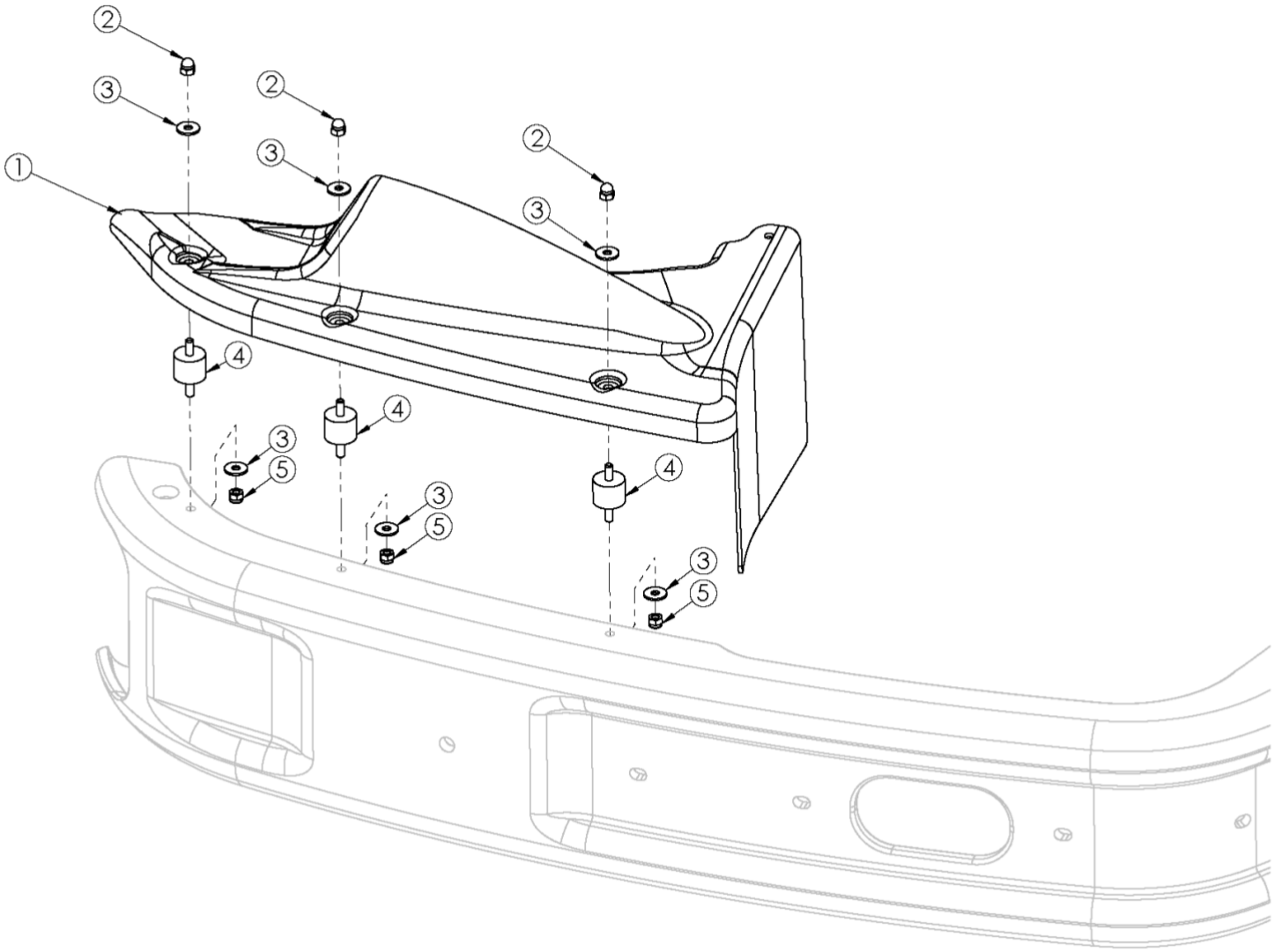

POS.	COD.	DESCRIZIONE	*DESCRIPTION*
1	AFS.4841S	Carena laterale centurion 2019 sx	*Side fairing lh cent*
2	SBN.02376	Dado m 6 cieco zincato cent	*Blind nut m 6 black cent*
3	AFN.00263	Rondella 6,5-18x1,6	*Washer 6,5-18x1,6*
4	AFS.02296	Silentblock m+m m 6 ø25x20 centurion	*Silentblock m+m m 6 25x20 cent*
5	AFN.00264	Dado m 6 autoblock alto	*Nut m6 high self-locking*

CARENA POSTERIORE - REAR FENDER

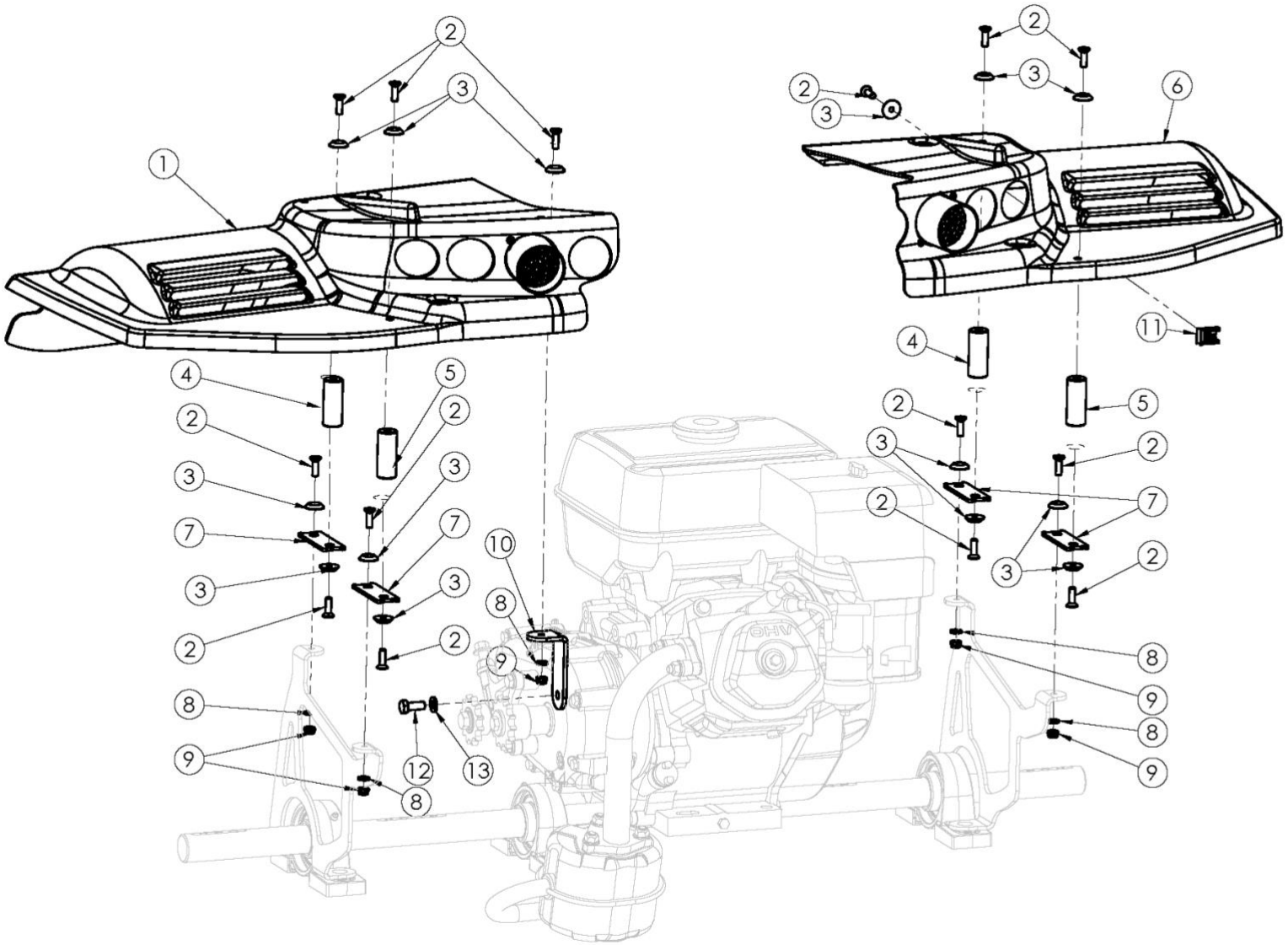

POS.	COD.	DESCRIZIONE	*DESCRIPTION*
1	SL1.2170S	Carena posteriore sx centbi	*Rear fender lf centbi*
2	AFN.00261	Vite m 6x 20 svasata 5933	*M6x20 countersunk head screw*
3	SAN.00249	Rondella 6 svasata nera	*Washer 6 countersunk black*
4	SZ0.04903	Piastra distanziale carena post.biposto 70mm	*Rear fairing spacer plate 70mm*
5	SZ0.04902	Piastra distanziale carena post.biposto 53mm	*Rear fairing spacer plate 53mm*
6	SL1.2170D	Carena posteriore dx centbi	*Rear fender rh centbi*
7	SZ0.02511	Piastra silentblock spoiler dx/sx cent	*Spoiler rh/lf silentblock plate cent*
8	AFN.00263	Rondella 6,5-18x1,6	*Washer 6,5-18x1,6*
9	AFN.00106	Dado m 6 autoblock basso	*Nut m6 low self-locking*
10	SZ0.02985	Supporto carena posteriore centbi	*Rear fender support centbi*
11	AFS.02327	Clips prestola m6 centurion	*Centurion clips m6 for fitting*

FRONTALINO - FRONT FAIRING

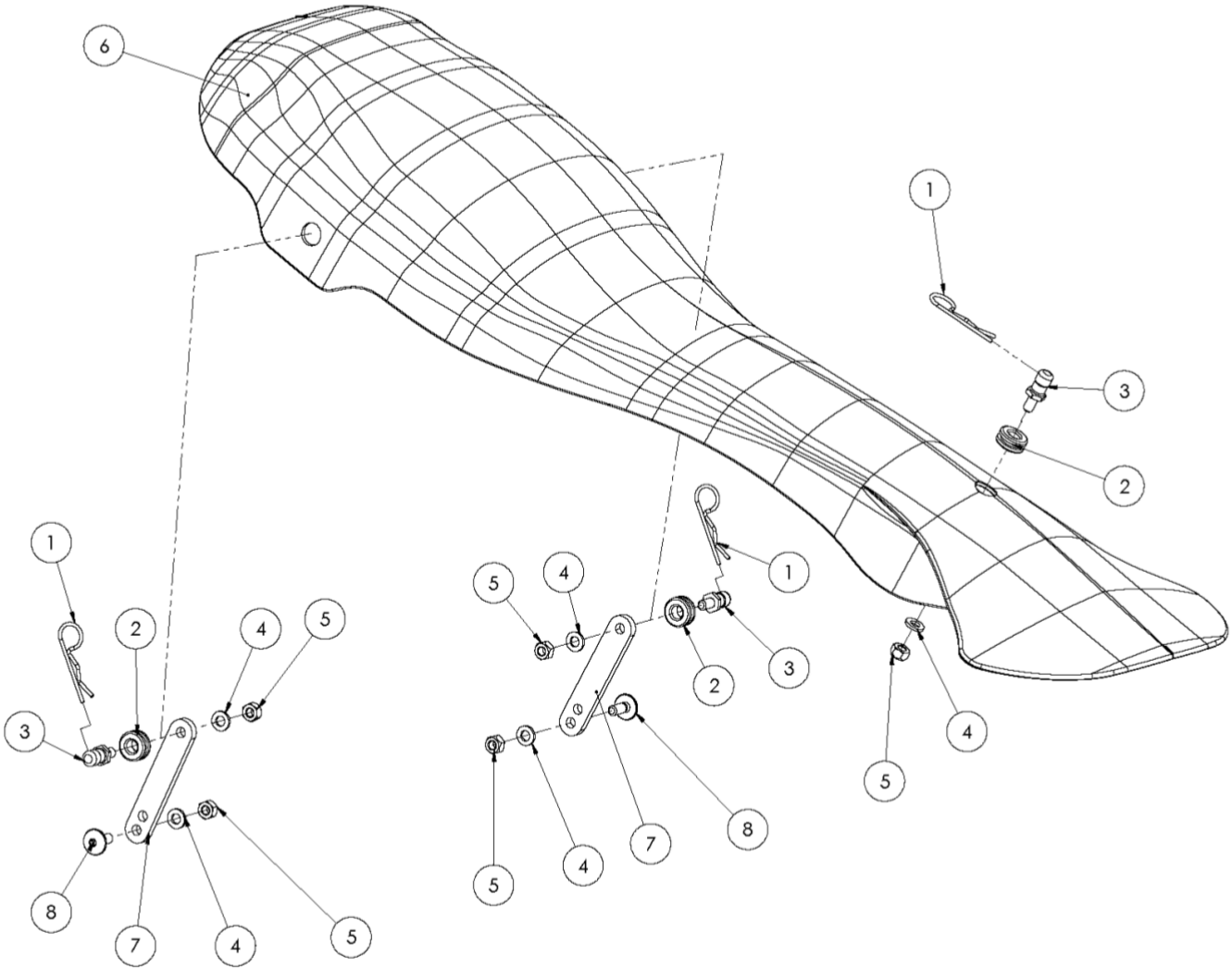

POS.	COD.	DESCRIZIONE	*DESCRIPTION*
1	SZ0.00102	Spina elastica supporto frontalino	*Front fairing elastic pin*
2	AFS.04522	Gommino supporto frontalino kg	*Front fairing rubber kg*
3	SBN.00103	Perno supporto frontalino inferiore	*Front fairing support pivot black*
4	AFN.00105	Rondella 6,5-12x1,5	*Washer 6,5-12x1,5*
5	AFN.00264	Dado m 6 autoblock alto	*Nut m6 high self-locking*
6	AFS.04226	Frontalino na3 cik-fia nero	*Na3 cik-fia front fairing black*
7	FZ0.01220	Piastrina prolunga frontalino centbi	*Front fairing extension plate*
8	AFS.00261	Vite testa tonda larga m 6x 16 pianale	*Floor tray screw large round head m6x16*

RUOTA POSTERIORE - REAR WHEEL

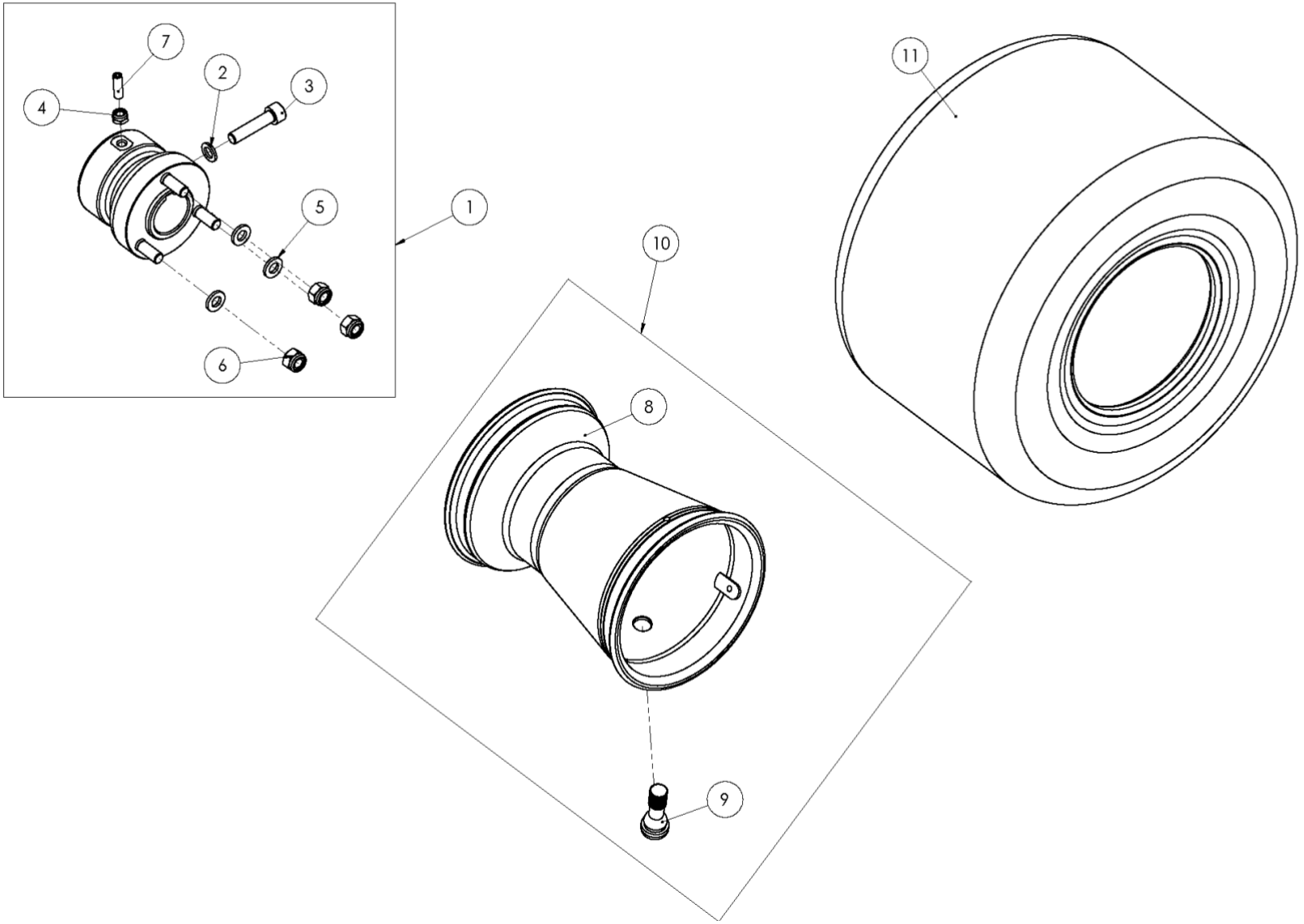

POS.	COD.	DESCRIZIONE	*DESCRIPTION*
1	FM0.01845	Mozzo posteriore 30x 60 centurion	*Rear hub 30x 60 complete*
2	AFN.00287	Rondella 8,5-14x1,5	*Washer 8,5-14x1,5*
3	AFN.02153	Vite m 8x 35 cilindrica 5931	*M 8x35 socket head screw*
4	AFN.00106	Dado m 6 autoblock basso	*Nut m6 low self-locking*
5	AFN.00108	Rondella 8,5-18x2	*Washer 8,5-18x2*
6	AFN.00128	Dado m 8 autoblock alto	*Nut m8 high self-locking*
7	AFN.02639	Grano m 6x20 testa piana	*M6x20 grub screw*
8	FVO.00293	Cerchio al h180 post no fori viti nero opaco	*Rim to h180 post no screw holes matt black*
9	AFS.02649	Valvola tubless corta	*Tubless valve short*
10	FM0.00293	Cerchio al h180 post no viti puffo/cent nero comp.	*Alu rear rim h180 no screws black complete*
11	*XXX.XXXX*	*Pneumatico 11x6.00-5*	*Tyre 11x6.00-5*

RUOTA ANTERIORE - FRONT WHEEL

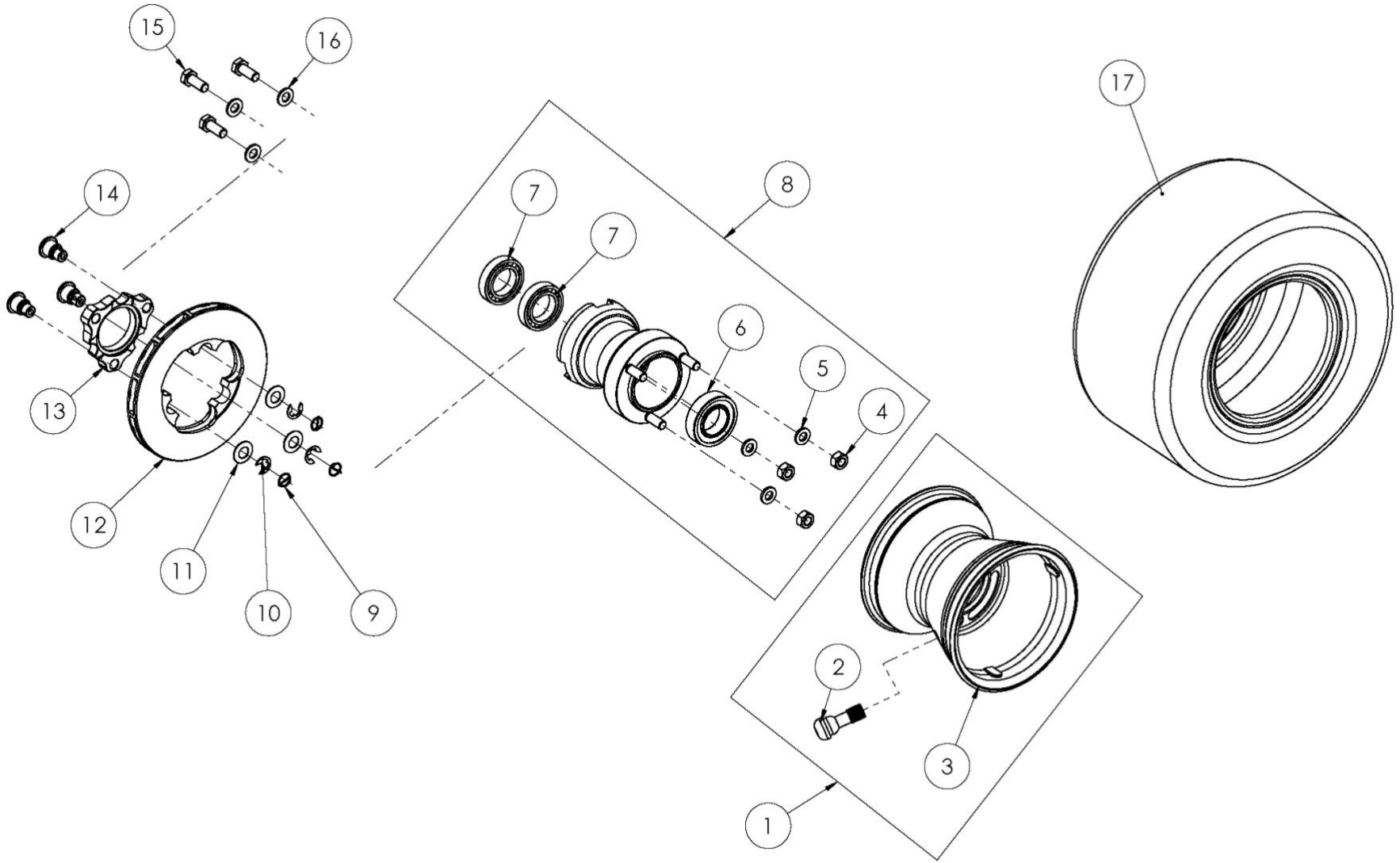

POS.	COD.	DESCRIZIONE	*DESCRIPTION*
1	FM0.03794	Cerchio al h132 ant no viti cent comp.	*Alu front wheel h132 n/screws assy cent*
2	AFS.02649	Valvola tubless corta	*Tubless valve short*
3	FVO.03794	Cerchio al h132 ant no fori viti cent nero opaco	*Al h132 rim no holes black matte*
4	AFN.00128	Dado m 8 autoblock alto	*Nut m8 high self-locking*
5	AFN.00108	Rondella 8,5-18x2	*Washer 8,5-18x2*
6	AFN.00685	Cuscinetto 6005 zz mozzo ant.nol	*Bearing rental front wheel hub*
7	AFN.01750	Cuscinetto 61905 zz mozzo ant. d25	*Bearing front hub ø25*
8	FM0.02949	Mozzo anteriore per disco freno cent compl.	*Front wheel hub centurion*
9	AFS.00232	Spina elastica d10 disco freno	*Elastic pin ø10 brake disc*
10	AFN.00231	Seeger d 8 disco freno	*Seeger d8 brake disc*
11	AFN.01677	Rondella disco freno elastica post ø10-23	*V09/v10 brake disc elastic washer*
12	SL1.01731	Rett>disco freno anteriore autoventilato cent	*Front brake disc cent ventilated*
13	SZ0.02140	Flangia disco autoventilato cent	*Pulley flange cent*
14	SBN.00372	Bussola disco freno anteriore v09-v11	*Front brake disc bush*
15	AFN.00316	Vite m 8x 22 esagonale 5739	*M 8x22 hexagonal head screw*
16	AFN.00129	Rondella 8,5-17x1,5	*Washer 8,5-17x1,5*
11	*XXX.XXXX*	*Pneumatico anteriore Centurion Biposto*	*Front tyre Centurion two seats*

KIT ADESIVI - STICKERS KIT



POS.	COD.	DESCRIZIONE	*DESCRIPTION*
1	AFS.04477	Kit adesivi centurion 2018 compl.	*Centurion stickers kit complete*
2	AFS.03366GIALLO	Kit adesivi centurion 2017 compl. giallo	*Centurion yellow stickers kit complete*
3	AFS.03366BLU	Kit adesivi centurion 2017 compl. blu	*Centurion blue stickers kit complete*

TUTA KART- RACING SUIT/ CASCO - HELMET



POS.	COD.	DESCRIZIONE	*DESCRIPTION*
1	XXX.XXXX	Tuta kart CRG-Sparco	*CRG-Sparco racing suit*
2	XXX.XXXX	Casco integrale con visiera	*Full face helmet with visor*
3	XXX.XXXX	Casco aperto	*Open helmet*

Centurion BIGFOOt

C.R.G. S.r.l. Via Mantova 4F - 25017 Lonato del Garda (BS) Tel. +39.030.9912604 Fax +39.030.9130714
www.crgrentalkart.com - rental@kartcrg.com