CRG

Catalogo
Catalogue

2024



Centurion BIPOSTO

Rel 006

DICHIARAZIONE DI CONFORMITA'

CE

Il fabbricante C.R.G. S.r.l.
Via Mantova, 4F/G 25017 Lonato del Garda (BS) Italia

dichiara che la macchina

Denominazione: **Kart da noleggio Tipo B**
Funzione: **Kart progettato e costruito per noleggio**
Modello: **CENTURION**
Matricola n.:

è stata sviluppata e prodotta in conformità alle seguenti disposizioni:

Direttiva Macchine 2006/42/CE

Principali norme applicate:

UNI EN 16230-1 : 2015 Kart da noleggio – Requisiti di sicurezza e metodi di prova per kart

UNI EN ISO 12100 : 2010 Sicurezza del macchinario – Principi generali di progettazione - Valutazione del rischio e riduzione del rischio.

UNI EN ISO 3744 : 2010 Acustica – Determinazione dei livelli di potenza sonora delle sorgenti di rumore mediante misurazione della potenza sonora

EN ISO 4871 Acustica - Dichiarazione e verifica dei valori di emissione sonora in macchinari e attrezzature

UNI EN ISO 11202 : 2010 Acustica – Rumore emesso dalle macchine e dalle apparecchiature. Determinazione dei livelli di pressione sonora di emissione al posto di lavoro e in altre specifiche posizioni applicando correzioni ambientali approssimate.

UNI EN ISO 5349-1: 2004 Vibrazioni meccaniche – Misurazione e valutazione dell'esposizione dell'uomo alle vibrazioni trasmesse alla mano

Persona autorizzata a costituire il Fascicolo Tecnico: Luca Bravo
c/o CRG Srl Via Mantova, 4F/G - 25017 Lonato del Garda (BS) Italia

Marina Vanaria
Legale rappresentante

DECLARATION OF CONFORMITY

CE

The manufacturer C.R.G. S.r.l.
Via Mantova, 4F/G 25017 Lonato del Garda (BS) Italia

declares that the vehicle

Denomination: **Rental kart Type B**
Function: **Kart designed and constructed for rental use**
Model: **CENTURION**
Year of production:
Serial code n.:

was developed and produced in compliance with the following regulations:

Car directive 2006/42/CE

Principle norms applicable:

UNI EN 16230-1 : 2015 Rental kart - Prescriptions for safety and test methods applicable for kart

UNI EN ISO 12100 : 2010 Safety of machinery – General principles for design. Risk assessment and risk reduction.

UNI EN ISO 3744 : 2010 Acoustics - Determination of sound power levels of noise source by measuring sound output

EN ISO 4871 Acoustic – Declaration and verification of noise emission values on machinery and equipment

UNI EN ISO 11202 : 2010 Acoustics - Noise emitted by machinery and equipment. Determination of emission sound pressure levels at a work station and at other specified positions applying approximate environmental corrections.

UNI EN ISO 5349-1: 2004 Mechanical vibration - Measurement and evaluation of human exposure to hand-transmitted vibration

Person authorized to compile the Technical File:
Luca Bravo
c/o CRG Srl Via Mantova, 4F/G - 25017 Lonato del Garda (BS) Italia

Marina Vanaria
Legal representative

INDICE

SCOCCA 7
PARAURI LATERALE 9
TUBI E PRESTOLE 11
PIANTONE E VOLANTI 13
BARRETTA E FUSELLO 15
PIANALE CENTRALE 17
PIANALE INFERIORE & ANTERIORE 19
PEDALE FRENO 21
PEDALE GAS 23
POMPA FRENO 25
INTERRUZIONE GAS 27
PIASTRA SUPPORTO FILO KIT INTERRUZIONE GAS 29
LEVA INTERRUZIONE GAS 31
ASSALE 33
DISCO FRENO & MOZZO 35
PINZA FRENO 37
PINZA FRENO ANTERIORE 39
SALVA DISCO 41
BATTERIA 43
CABLAGGIO LUCI STOP 45
CINTURE SICUREZZA 47
CINTURE SICUREZZA 48
SEDILI 49
BALESTRA 51
PROTEZIONE ANTERIORE 53
PROTEZIONE POSTERIORE 55
PROTEZIONE LATERALE DESTRA 57
PROTEZIONE LATERALE SINISTRA 59
SPOILER ANTERIORE 61
MARMITTA 63
MONTAGGIO MOTORE 65
TENDICATENA 67
CARENA DESTRA 69
CARENA SINISTRA 71
CARENA POSTERIORE 73
FRONTALINO 75
RUOTA POSTERIORE 77
RUOTA ANTERIORE 79
OPTIONAL ROLL BAR 81
KIT ADESIVI 83
TUTA KART / CASCO 85

INDEX

FRAME 7
SIDE FEARING 9
BRAKE TUBE AND CLIPS 11
STEERING WHEEL AND COLUMN 13
STEERING ROD AND STUB AXLE 15
INNER FLOOR TRAY 17
FRONT & BOTTOM FLOOR TRAY 19
BRAKE PEDAL 21
GAS PEDAL 23
MASTER CYLINDER 25
GAS SHUT OFF 27
GAS CABLE SHUT OFF SUPPORT PLATE BRACKET 29
GAS SHUT OFF LEVER 31
REAR AXLE 33
BRAKE DISC & HUB 35
BRAKE CALIPER 37
FRONT BRAKE CALIPER 39
PROTECTION PLATE 41
BATTERY 43
REAR STOP LIGHT WIRING 45
SAFETY BELT 47
SAFETY BELT 48
SEATS 49
LEAF SPRING 51
FRONT PROTECTION 53
REAR PROTECTION 55
RIGHT SIDE PROTECTION 57
LEFT SIDE PROTECTION 59
FRONT SPOILER 61
EXHAUST 63
ENGINE MOUNTING 65
CHAIN TIGHTENER 67
RIGHT SIDE FAIRING 69
LEFT SIDE FAIRING 71
REAR FENDER 73
FRONT FAIRING 75
REAR WHEEL 77
FRONT WHEEL 79
OPTIONAL ROLL BAR 81
STICKERS KIT 83
RACING SUIT/ HELMET 85

REL N°	DATE	CHANGELOG
005	03/2023	Added discount color scheme , Edited pg3
006	02/2024	*MINOR FIXES*

OPTIONAL	**PREZZO** *PRICE*
AVVIAMENTO ELETTRICO PER HONDA GX270 *ELECTRIC START IGNITION FOR HONDA GX270*	€
BOBINA MAGGIORAZIONE RPM PER HONDA GX390 *RPM PERFORMANCE ENHANCER COIL FOR HONDA GX390* **NOTE**: USANDO QUESTA BOBINA VERRÀ ESCLUSO IL PRODOTTO DALLA GARANZIA HONDA - ***NOTE****: USING THIS COIL WILL EXCLUDE YOUR PRODUCT FROM HONDA'S PRODUCT WARRANTY*	€
ROLL BAR CON CINTURA DI SICUREZZA A 4 PUNTI *ROLL BAR WITH FOUR POINT HARNESS*	€
ROLL BAR CON CUSCINO POGGIA TESTA *PADDED HEAD SUPPORT ROLL BAR* **NOTE:** IL CENTURION MINI VIENE FORNITO CON ROLL BAR CROMATO SENZA SUPPORTO POGGIA TESTA - ***NOTE:*** *CENTURION MINI COMES STANDARD WITH NORMAL CHROME ROLL BAR (NO PADDED HEAD SUPPORT)*	€
COMANDI MANUALI PER DISABILI *DISABLED HAND CONTROLS*	€
FRENI ANTERIORI *FRONT BRAKE SYSTEM*	€
KIT PIOMBO COMPLETO *LEAD WEIGHT KITS COMPLETE*	€
SEDILE REGOLABILE *ADJUSTABLE SEAT*	€
VOLANTE REGOLABILE *ADJUSTABLE STEERING WHEEL*	€

ACCESSORI - *ACCESSORIES*	**PREZZO** *PRICE*
TRANSPONDER DI SPEGNIMENTO PER KART *SHUTDOWN TRANSPONDER FOR KART*	€
TELECOMANDO WIRELESS REMOTE CON GUSCIO PROTETTIVO *WIRELESS REMOTE WITH PROTECTIVE COVER*	€

INFORMAZIONI: TERMINI DI PAGAMENTO: ANTICIPATO O LETTERA DI CREDITO. TUTTA LA LINEA CENTURION VIENE FORNITO CON 6 MESI DI GARANZIA SULLA SCOCCA.

INFORMATIONS: PAYMENT TERMS: *ADVANCE WIRE TRANSFER OR STAND BY LETTER OF CREDIT. ALL CRG RENTAL KARTS COME COMPLETE WITH A 6 MONTH WARRANTY ON THE FRAME.*

SCOCCA – FRAME

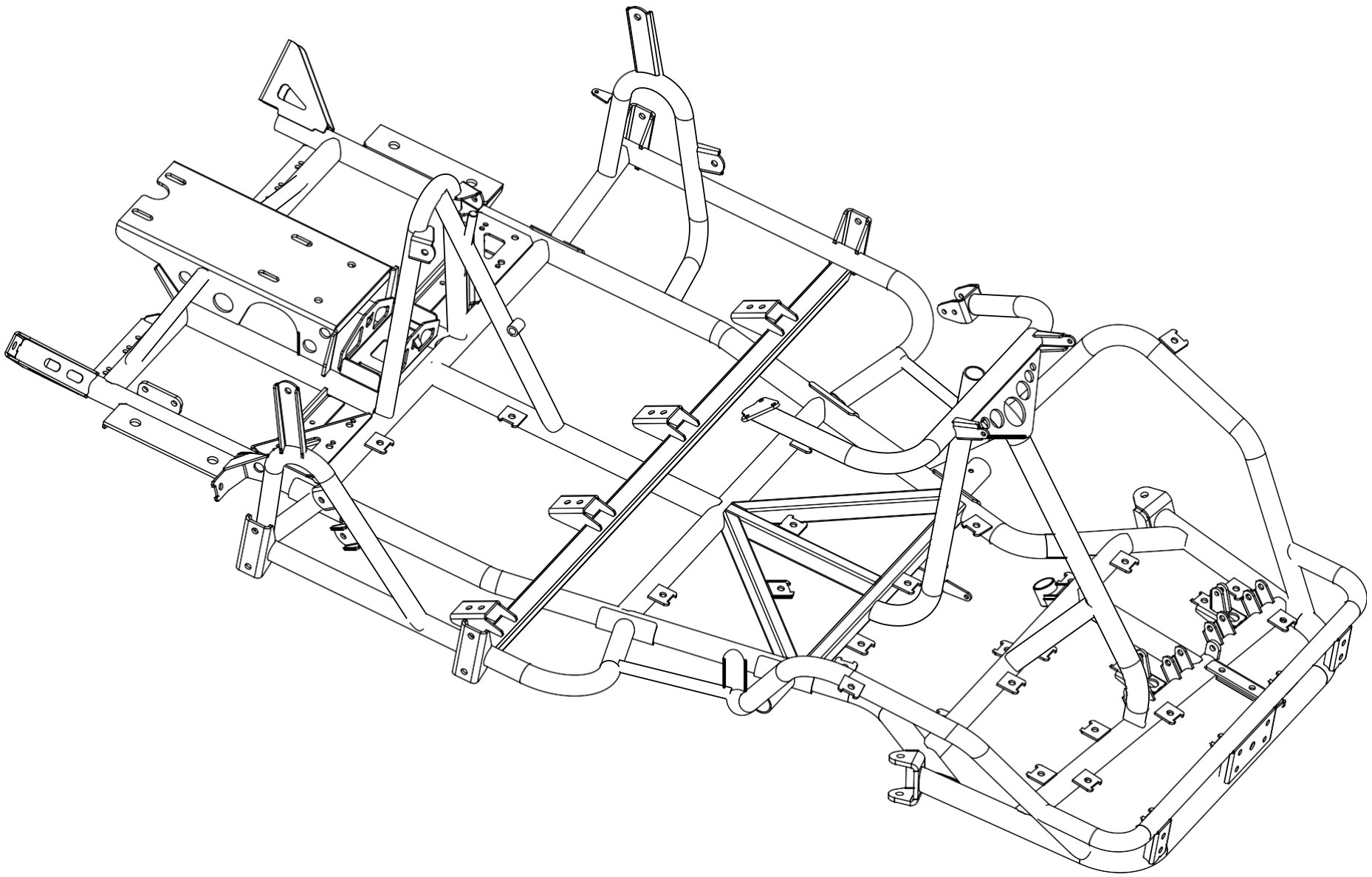

POS.	COD.	DESCRIZIONE	*DESCRIPTION*
1	FVN.00746	Scocca centbi nera	*Black frame centbi*

PARAURI LATERALE – SIDE FAIRING

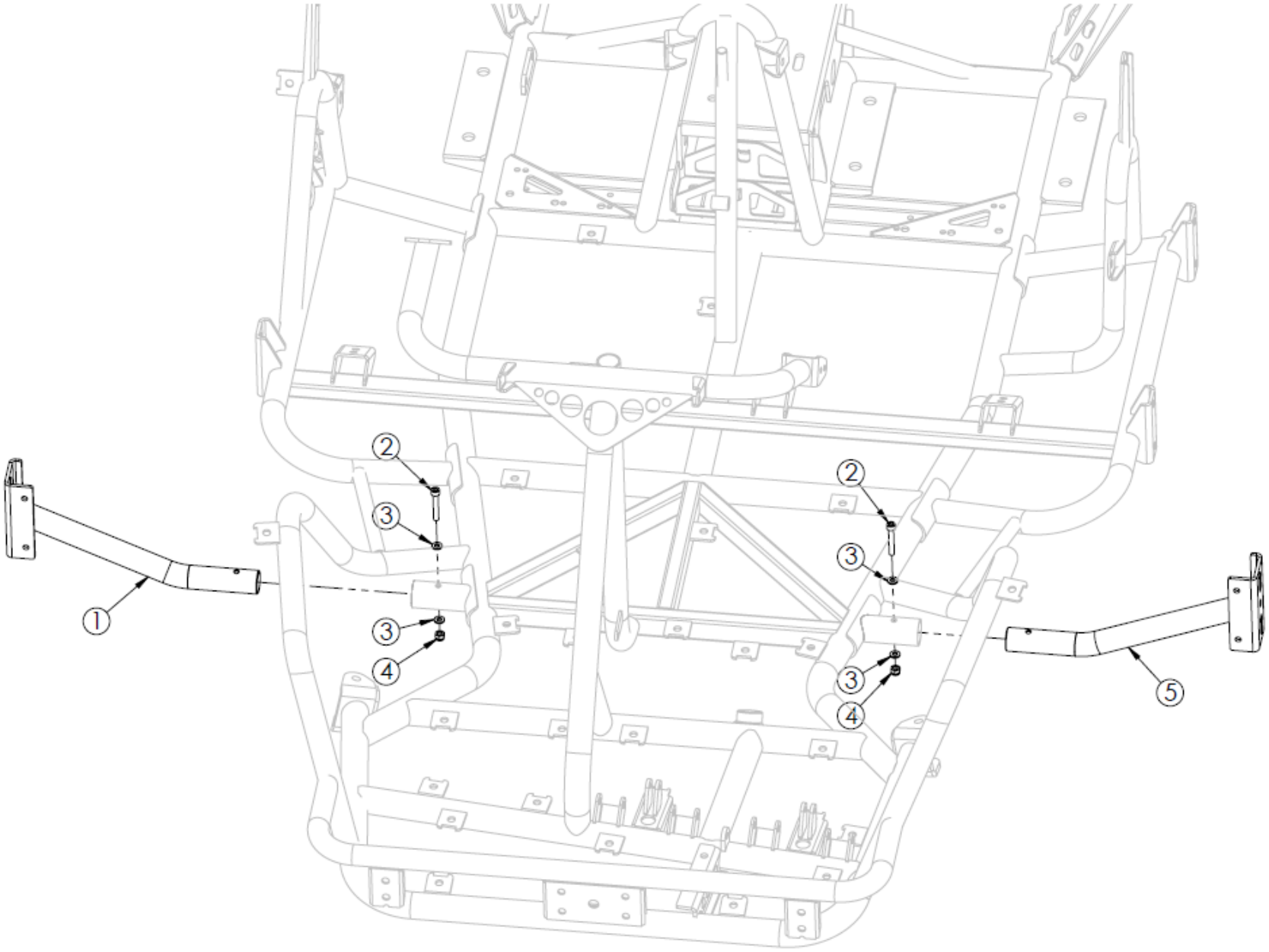

POS.	COD.	DESCRIZIONE	*DESCRIPTION*
1	SZE.2151D	Paraurti laterale centbi dx	*Side bumper rh centbi*
2	AFN.02035	Vite m 6x 45 cilindrica 5931	*M6x45 socket head screw*
3	AFN.00105	Rondella 6,5-12x1,5	*Washer 6,5-12x1,5*
4	AFN.00264	Dado m 6 autoblock alto	*Nut m6 high self-locking*
5	SZE.2151S	Paraurti laterale centbi sx	*Side bumper lf centbi*

TUBI E PRESTOLE – BRAKE TUBE AND CLIPS

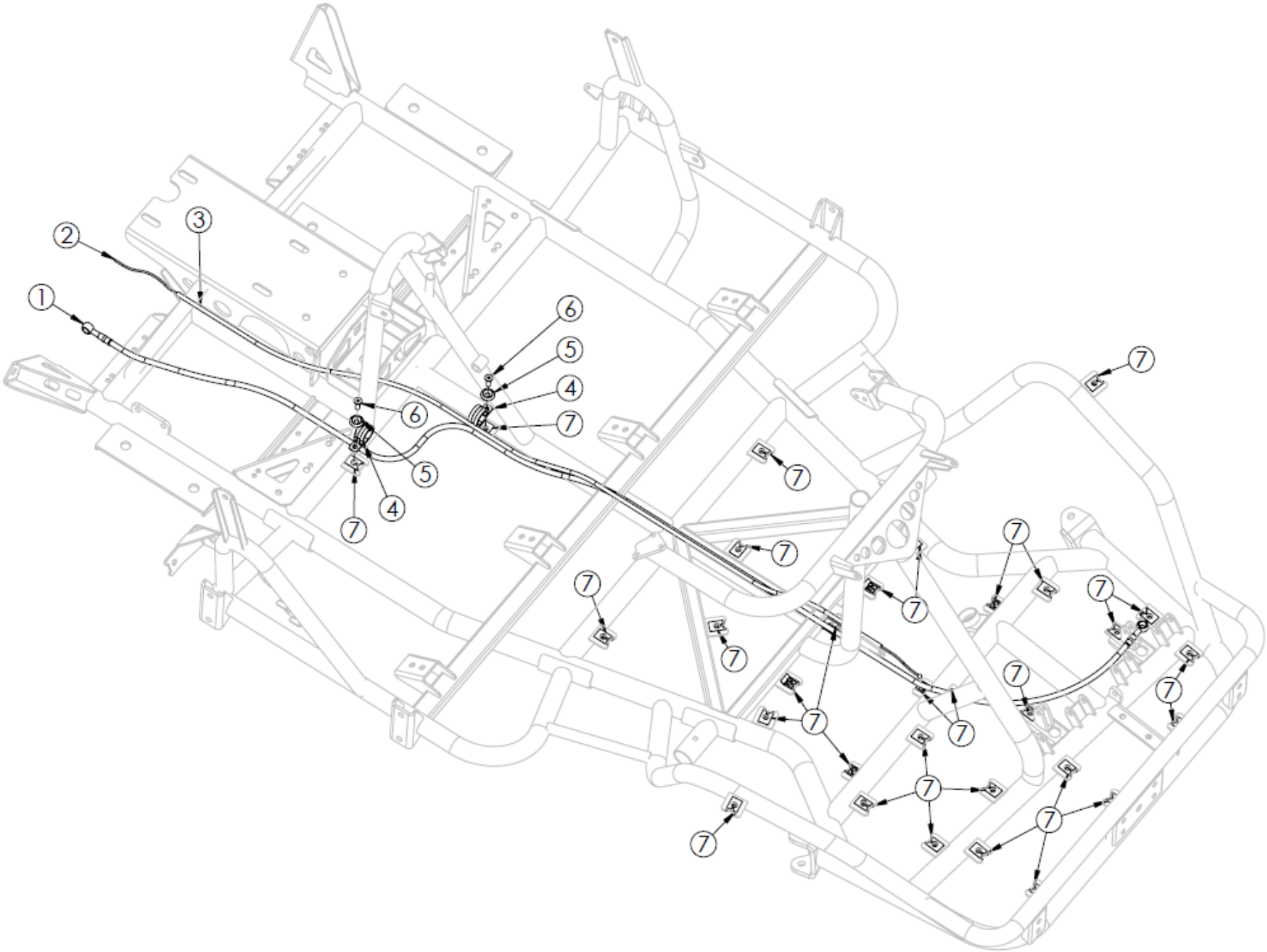

POS.	COD.	DESCRIZIONE	*DESCRIPTION*
1	AFS.01792	Tubo freno occhiello mm1800 rosso post cent disab	*Brake tube eyelet 1800mm red*
2	AFS.02130	Filo gas mm2200 centurion sp.1,5	*Gas cable cent sp.1,5*
3	AMS.00516	Guaina filo d6 frizione	*Sheater ø6 for clutch*
4	AFS.02945	Morsetto cavo 26/m6 centurion	*Cable clamp 26/m6 cent*
5	SAN.00249	Rondella 6 svasata nera	*Washer 6 countersunk black*
6	AFN.00261	Vite m 6x 20 svasata 5933	*M6x20 countersunk head screw*
7	AFS.02327	Clips prestola m6 centurion	*Centurion clips m6 for fitting*

PIANTONE E VOLANTI – STEERING WHEEL AND COLUMN

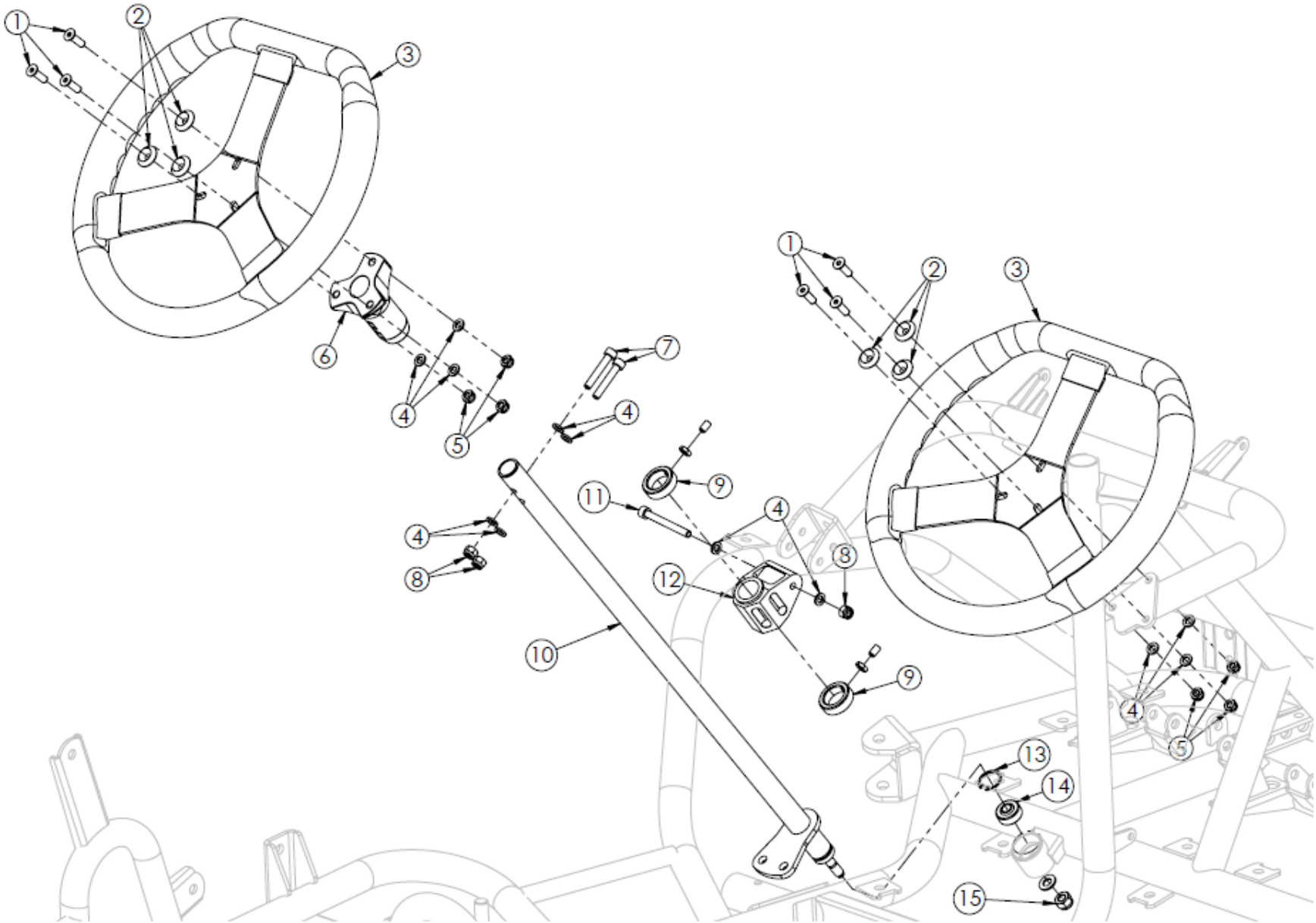

POS.	COD.	DESCRIZIONE	*DESCRIPTION*
1	AFN.00261	Vite m 6x 20 svasata 5933	*M6x20 countersunk head screw*
2	SAN.00249	Rondella 6 svasata nera	*Washer 6 countersunk black*
3	AFS.04221	Volante noleggio centurion 360 2018	*Steering wheel cent ø360*
4	AFS.04288	Volante noleggio centurion 320 2018	*Steering wheel cent ø320*
5	AFN.00105	Rondella 6,5-12x1,5	*Washer 6,5-12x1,5*
6	AFN.00106	Dado m 6 autoblock basso	*Nut m6 low self-locking*
7	FAN.01626	Mozzo volante inclinato nero	*Steering wheel hub inclined black*
8	AFN.02154	Vite m 6x 35 cilindrica 12.9 5931	*M 6x35 socket head screw 12.9*
9	AFN.00264	Dado m 6 autoblock alto	*Nut m6 high self-locking*
10	FKN.00356	Kit boccola piantone (2)	*Steering column lock ring kit*
11	FC0.02068	Piantone sterzo centurionbi	*Steering wheel column centbi*
12	AFN.00594	Vite m 6x 60 cilindrica 5931	*M 6x 60 socket head screw*
13	AFS.04812	Supporto piantone plastica 4 fori	*Plastic column support 4 holes*
14	AFN.00154	Seeger d22 piantone/pompa acqua	*Seeger d22 steering column/water pump*
15	AFN.00153	Uniball piantone ø 8	*Steering column bearing*

BARRETTA E FUSELLO – STEERING ROD AND STUB AXLE

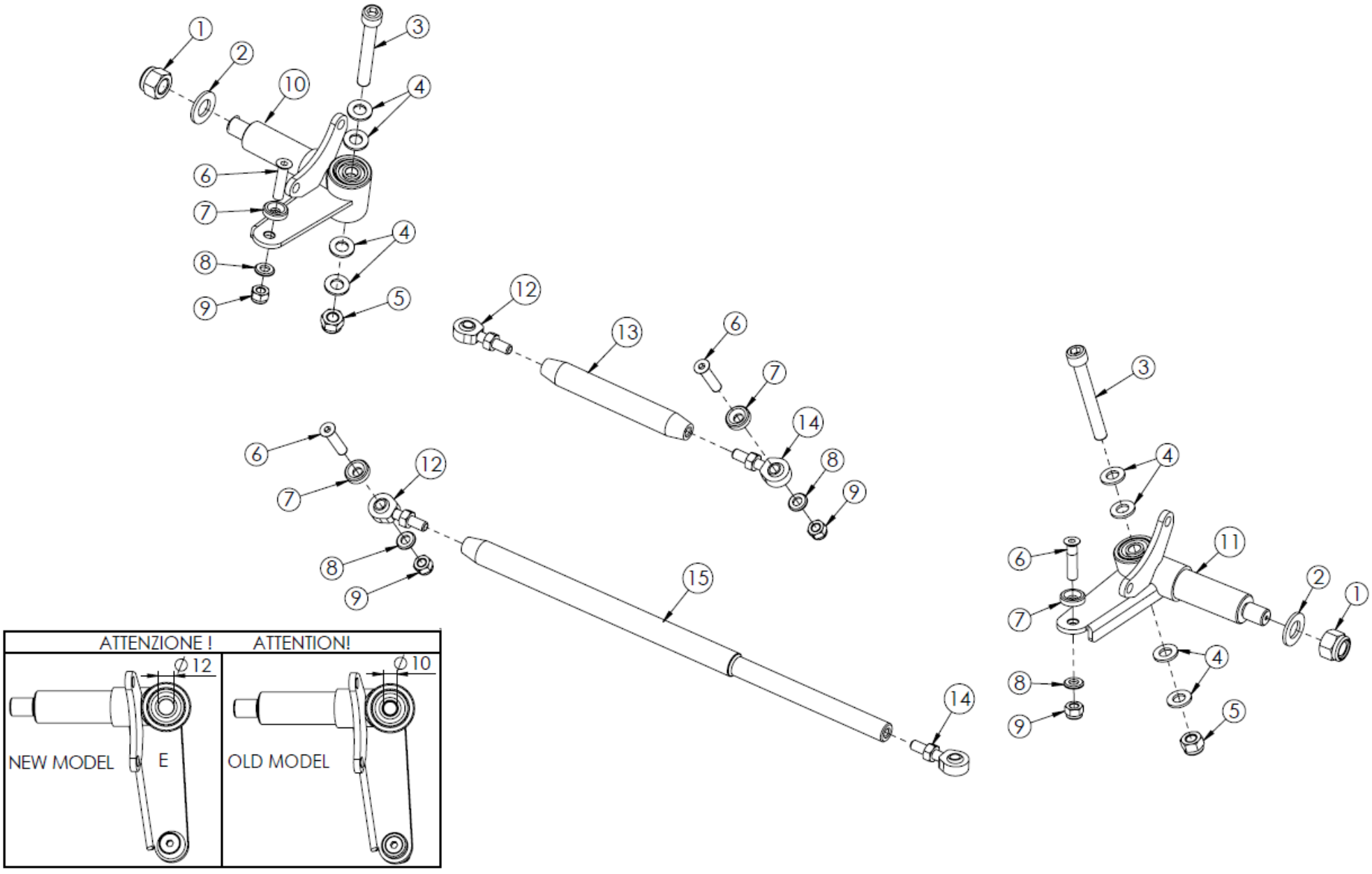

POS.	COD.	DESCRIZIONE	*DESCRIPTION*
1	AFN.00058	Dado m14x1,5 autoblock basso	*Nut m14x1,5 self-locking*
2	AFN.02414	Rondella 14 -28x3	*Washer 14-28x3*
3	AFN.02328	Vite m10x 80 cilindrica 12.9 5931	*M10x 80 socket head screw 12,9*
4	AFN.01637	Rondella 10,5-20x2	*Washer 10,5-20x2*
5	AFN.02393	Dado m10 autoblock alto	*Nut m10 high self-locking*
6	AFN.00483	Vite m 8x 40 svasata 5933	*M 8x 40 countersunk head screw*
7	SAN.00146	Rondella 8 svasata nera	*Washer 8 countersunk black*
8	AFN.00287	Rondella 8,5-14x1,5	*Washer 8,5-14x1,5*
9	AFN.00128	Dado m 8 autoblock alto	*Nut m8 high self-locking*
10	FM0.0424S	Fusello nol ce ø12 sx completo	*Stub axle ø12 lf completo ce*
11	FM0.0424D	Fusello nol ce ø12 dx completo	*Stub axle ø12 rh complete ce*
12	AFS.0047S	Uniball sterzo sx c/dado	*Ball joint left with nut*
13	SL1.02696	Barretta sterzo tonda cm.14,0 centbi	*Steering rod rounded cm.13,5 centbi*
14	AFS.0047D	Uniball sterzo dx c/dado	*Ball joint rh with nut*
15	SL1.02956	Barretta sterzo tonda cm.41,5 centbi	*Steering rod rounded cm.42 centbi*

PRIMA DI ORDINARE RICAMBI, VI CONSIGLIAMO DI VERIFICARE IL VOSTRO MODELLO - BEFORE ORDERING PARTS, WE ADVISE YOU TO CHECK YOUR MODEL

1	AFN.02328	Vite m10x 80 cilindrica 12.9 5931	*M10x 80 socket head screw 12,9*
2	AFN.01637	Rondella 10,5-20x2	*Washer 10,5-20x2*
3	AFN.02393	Dado m10 autoblock alto	*Nut m10 high self-locking*
4	FM0.0424S	Fusello nol ce ø12 sx completo	*Stub axle ø12 lf completo ce*
5	FM0.0424D	Fusello nol ce ø12 dx completo	*Stub axle ø12 rh complete ce*

PIANALE CENTRALE – INNER FLOOR TRAY

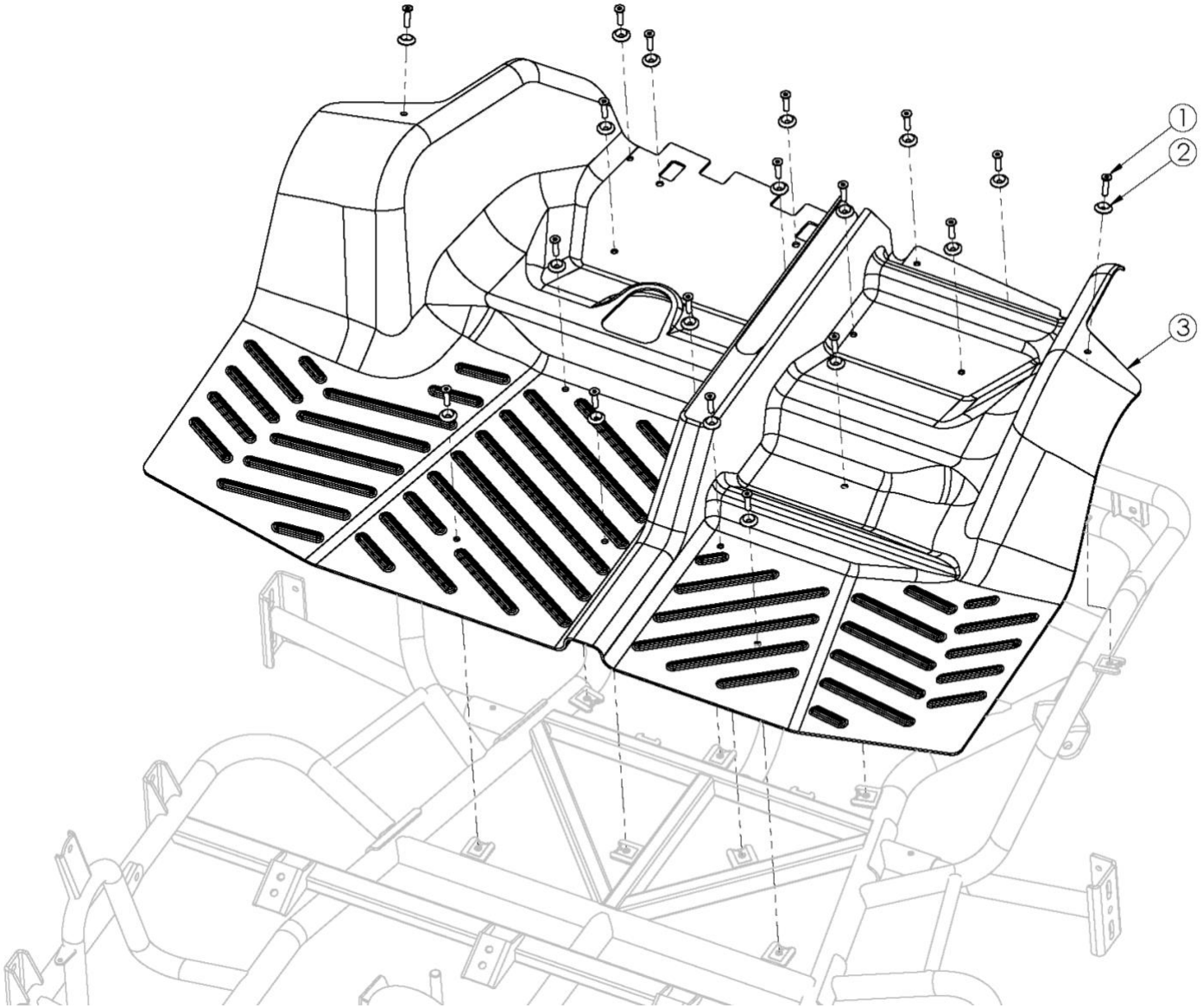

POS.	COD.	DESCRIZIONE	*DESCRIPTION*
1	AFN.00295	Vite m 6x 25 svasata 5933	*M6x25 countersunk head screw*
2	SAN.00249	Rondella 6 svasata nera	*Washer 6 countersunk black*
3	AFS.02674	Pianale centurionbi centrale	*Central floor tray centbi*

PIANALE INFERIORE & ANTERIORE – FRONT & BOTTOM FLOOR TRAY

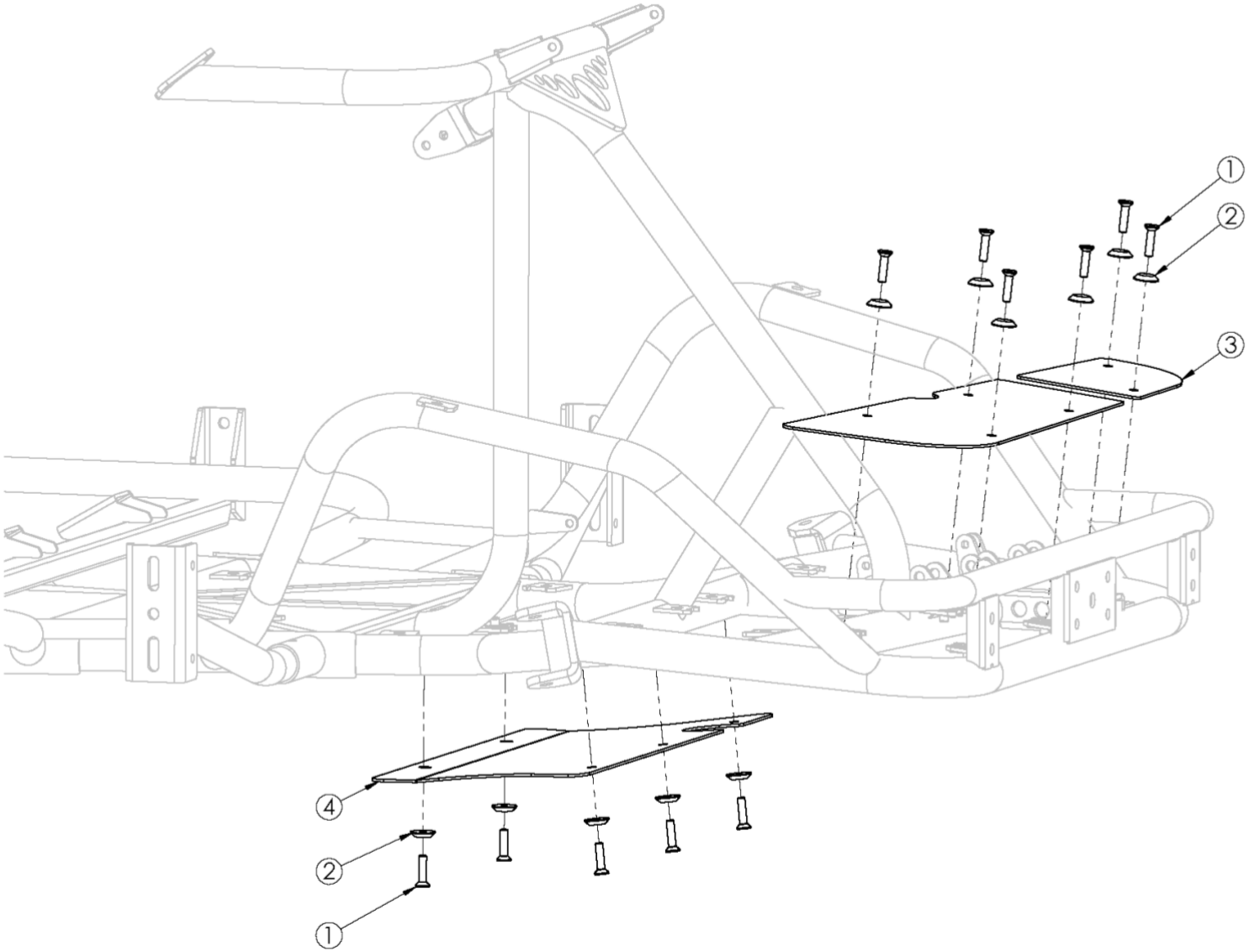

POS.	COD.	DESCRIZIONE	*DESCRIPTION*
1	AFN.00295	Vite m 6x 25 svasata 5933	*M6x25 countersunk head screw*
2	SAN.00249	Rondella 6 svasata nera	*Washer 6 countersunk black*
3	AFS.02822	Pianale centurionbi anteriore	*Front floor tray centbi*
3	AFS.02859	Pianale inferiore-carter sterzo centbi	*Bottom floor tray centbi*

PEDALE FRENO – BRAKE PEDAL

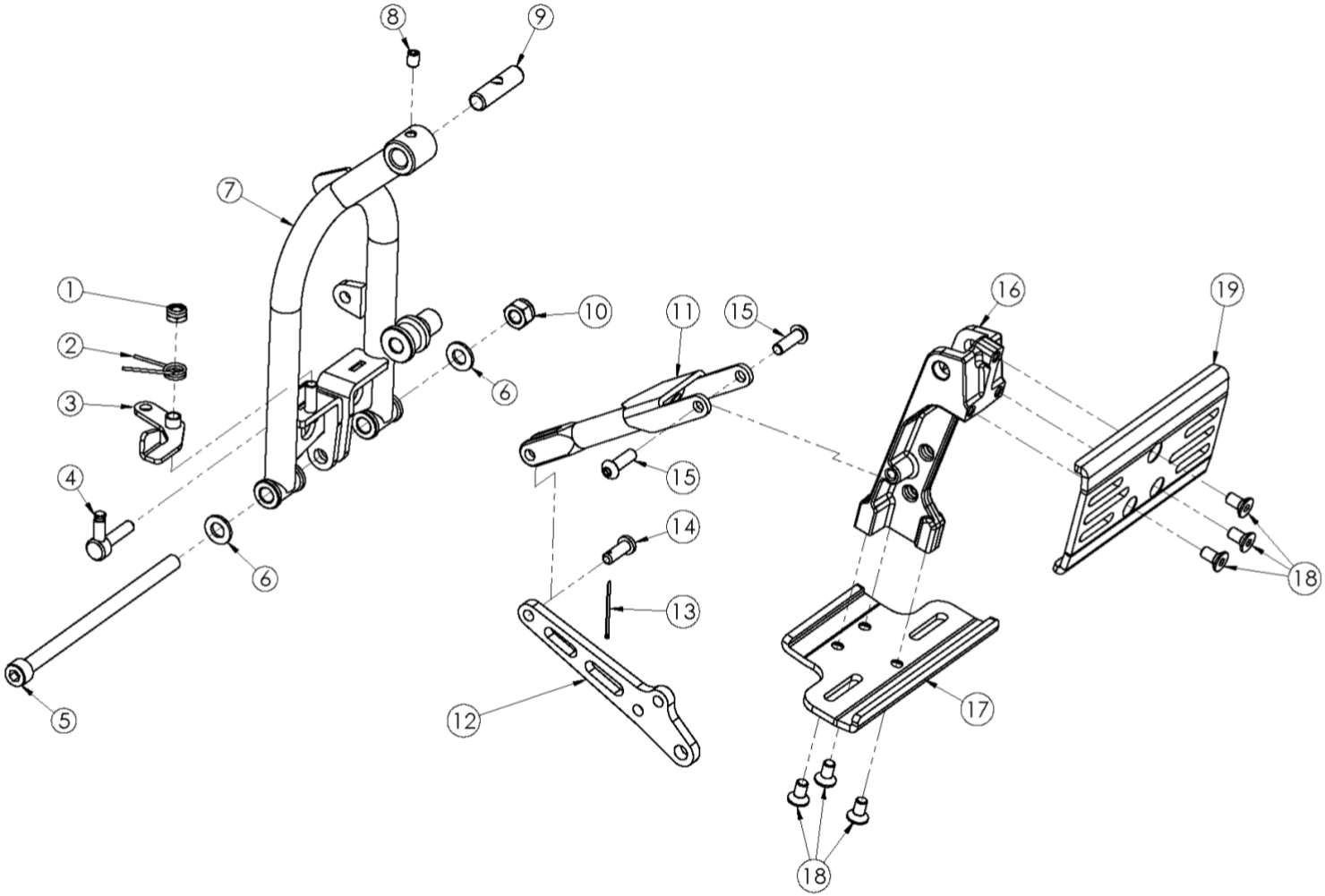

POS.	COD.	DESCRIZIONE	*DESCRIPTION*
1	AFN.00106	Dado m 6 autoblock basso	*Nut m6 low self-locking*
2	SZ0.02756	Molla manopola pedale centurionbi	*Pedal spring knob centbi*
3	SZ0.02711	Manopola fissaggio pedale centurionbi	*Pedal fixing knob centbi*
4	SZ0.02870	Perno manopola fissaggio pedale centbi	*Pedal fixing knob pivot centbi*
5	AFN.00114	Vite m 8x140 cilindrica 5931	*M 8x140 socket head screw*
6	AFN.02209	Rondella 8,4-16x1,6	*Washer 8,4-16x1,6*
7	SC0.02717	Pedale freno centbi	*Brake pedal centbi*
8	AFN.02409	Grano m 6x 8 bloccaggio pedale centbi	*Grub screw m6x 8 centbi block system*
9	SZ0.02703	Perno pedale d10 2012 centurionbi	*Pedal pivot d10 centbi*
10	AFN.00128	Dado m 8 autoblock alto	*Nut m8 high self-locking*
11	SC0.02715	Arretramento pedale freno e gas centbi	*Back trolley for pedals centbi*
12	SC0.02569	Biella pedale centurionbi	*Foot pedal conrod centbi*
13	AFN.00201	Copiglia	*Master cylinder split pin*
14	SBN.00214	Spina ripartitore mm17,5	*Divider pin 17,5mm*
15	AFN.00502	Vite m 6x 16 bombata 7380	*M 6x16 convex head screw*
16	SL1.02864	Corpo pedale evo centbi	*Pedal body evo centbi*
17	SC0.02731	Piastrina poggiapiedi bassa freno centbi	*Feet support plate low -brake centbi*
18	AFN.01717	Vite m 6x 16 svasata 5933	*M6x16 countersunk head screw*
19	SC0.02730	Piastrina poggiapiedi alta freno centbi	*Feet support plate high-brake centbi*

PEDALE GAS – GAS PEDAL

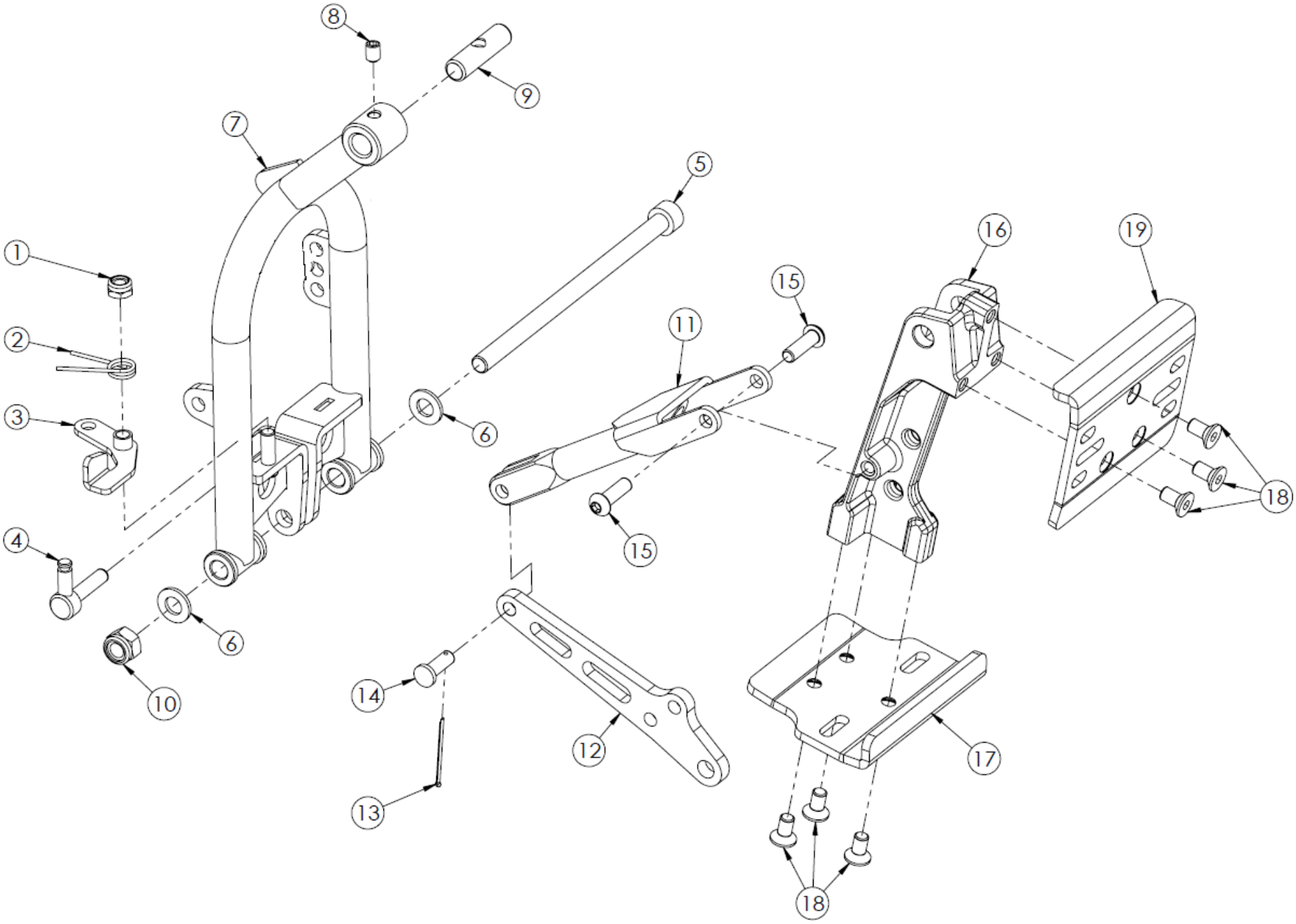

POS.	COD.	DESCRIZIONE	*DESCRIPTION*
1	AFN.00106	Dado m 6 autoblock basso	*Nut m6 low self-locking*
2	SZ0.02756	Molla manopola pedale centurionbi	*Pedal spring knob centbi*
3	SZ0.02711	Manopola fissaggio pedale centurionbi	*Pedal fixing knob centbi*
4	SZ0.02870	Perno manopola fissaggio pedale centbi	*Pedal fixing knob pivot centbi*
5	AFN.00114	Vite m 8x140 cilindrica 5931	*M 8x140 socket head screw*
6	AFN.02209	Rondella 8,4-16x1,6	*Washer 8,4-16x1,6*
7	SC0.02716	Pedale gas centbi	*Gas pedal centbi*
8	AFN.02409	Grano m 6x 8 bloccaggio pedale centbi	*Grub screw m6x 8 centbi block system*
9	SZ0.02703	Perno pedale d10 2012 centurionbi	*Pedal pivot d10 centbi*
10	AFN.00128	Dado m 8 autoblock alto	*Nut m8 high self-locking*
11	SC0.02715	Arretramento pedale freno e gas centbi	*Back trolley for pedals centbi*
12	SC0.02569	Biella pedale centurionbi	*Foot pedal conrod centbi*
13	AFN.00201	Copiglia	*Master cylinder split pin*
14	SBN.00214	Spina ripartitore mm17,5	*Divider pin 17,5mm*
15	AFN.00502	Vite m 6x 16 bombata 7380	*M 6x16 convex head screw*
16	SL1.02864	Corpo pedale evo centbi	*Pedal body evo centbi*
17	SC0.02732	Piastrina poggiapiedi bassa gas centbi	*Feet support plate low-gas centbi*
18	AFN.01717	Vite m 6x 16 svasata 5933	*M6x16 countersunk head screw*
19	SC0.02733	Piastrina poggiapiedi alta gas centbi	*Feet support plate high-gas centbi*

POMPA FRENO – MASTER CYLINDER

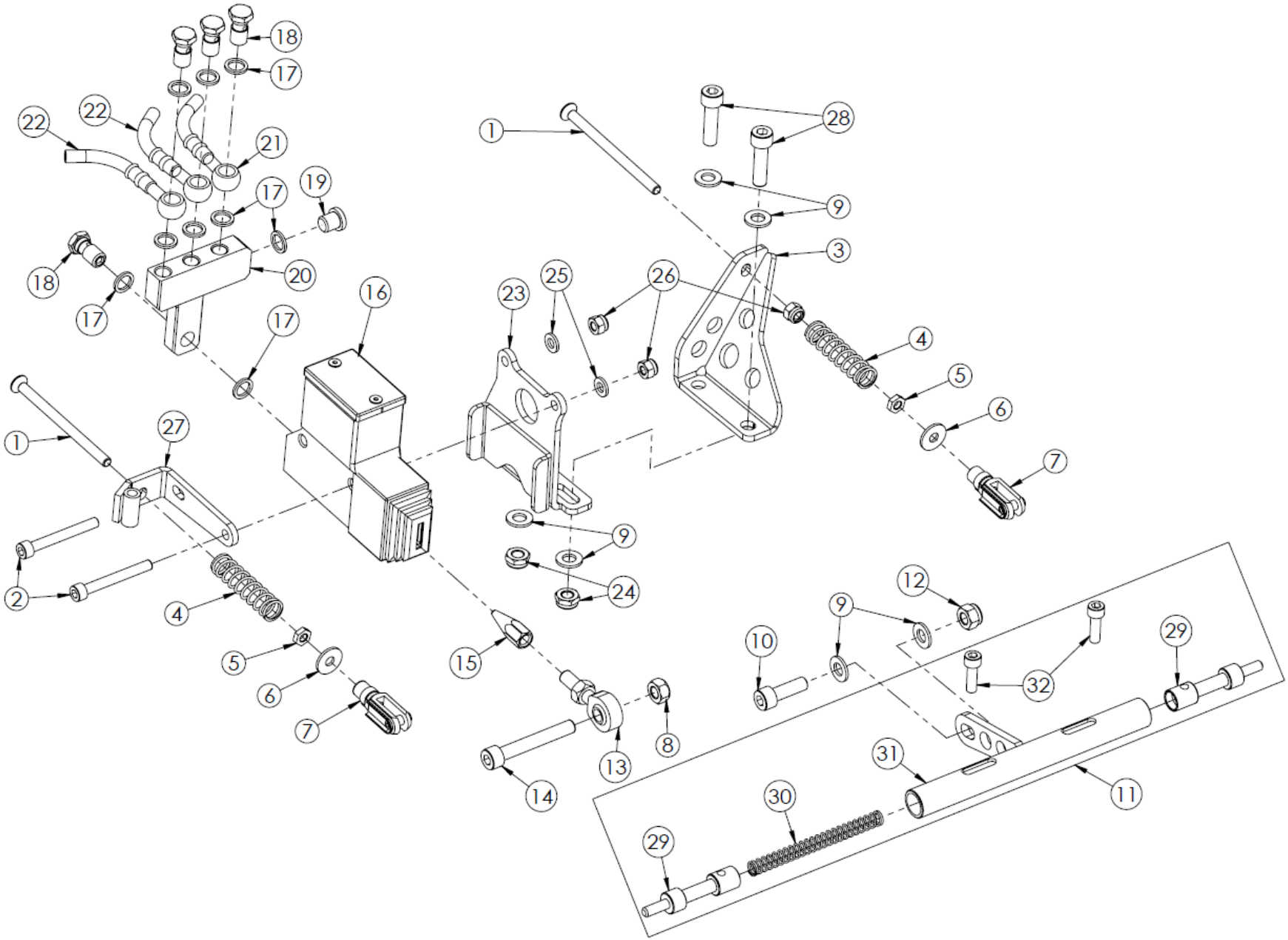

POS.	COD.	DESCRIZIONE	*DESCRIPTION*
1	AFN.02322	Vite m 6x 70 svasata 5933	*M 6x 70 countersunk head screw*
2	AFN.00358	Vite m 6x 50 cilindrica 5931	*M 6x 50 socket head screw*
3	SZ0.02683	Supporto molla pedale freno centbi	*rake pedal spring support centbi*
4	SZ0.00422	Molla pompa freni v08	*Master cylinder spring v08*
5	AFN.00093	Dado m 6	*Nut m 6*
6	AFN.00263	Rondella 6,5-18x1,6	*Washer 6,5-18x1,6*
7	AFS.00216	Forchetta semplice std sp.6	*Simple fork standard*
8	AFN.0049D	Dado m 8 dx	*Nut m8*
9	AFN.00129	Rondella 8,5-17x1,5	*Washer 8,5-17x1,5*
10	AFN.00732	Vite m 8x 25 cilindrica 5931	*M 8x25 socket head screw*
11	FM0.02704	Corpo fissaggio pedale completo centbi	*Pedal fix body complete centbi*
12	AFN.00128	Dado m 8 autoblock alto	*Nut m8 high self-locking*
13	AFS.0047D	Uniball sterzo dx c/dado	*Ball joint rh with nut*
14	AFN.00681	Vite m 8x 50 cilindrica 5931	*M8x50 hex socket screw*
15	SZ0.00607	Puntale pompa freni att.uniball centbi	*Master cyl.pivot uniball connec centbi*
16	FM0.00199	Pompa freni completa centbi	*Rear master cylinder complete centbi*
17	AFN.00186	Rondella 10,5-14x2 rame	*Copper washer 10,5-14x2*
18	SZ0.00185	Raccordo m10 v09/10	*Fitting m10*
19	SBN.00369	Tappo m10 v09/10	*Caliper cap m10 v09/v10*
20	FAN.01604	Riduzione tripla pompa freno centbi	*Master cyl.triple reduction centbi*
21	AFS.02753	Tubo freno occhiello mm2000 rosso centbi	*Brake tube eyelet mm2000*
22	AFS.00937	Tubo freno occhiello mm1000 rosso ant cent	*Bflash front brake pipe 1000mm*
23	SZ0.02560	Piastra pompa centbi	*Master cylinder plate centbi*
24	AFN.00160	Dado m 8 autoblock basso	*Nut m8 low self-locking*
25	AFN.00105	Rondella 6,5-12x1,5	*Washer 6,5-12x1,5*
26	AFN.00264	Dado m 6 autoblock alto	*Nut m6 high self-locking*
27	SZ0.03594	Supporto molla pedale acc. bigfoot biposto	*Acc. Pedal spring support bigfoot biposto*
28	AFN.00827	Vite m 8x 30 cilindrica 5931	*M 8x30 socket head screw*
29	SZ0.02705	Perno fissaggio pedale centurionbi	*Pedal fixing pivot centbi*
30	SZ0.02201	Molla ritorno carburatore cent	*Carburettor recovery spring cent*
31	SZ0.02704	Corpo fissaggio pedale centurionbi	*Pedal fixing body centbi*
32	AFN.00183	Vite m 6x 20 cilindrica 5931	*M6x20 socket head screw*

INTERRUZIONE GAS – GAS SHUT OFF

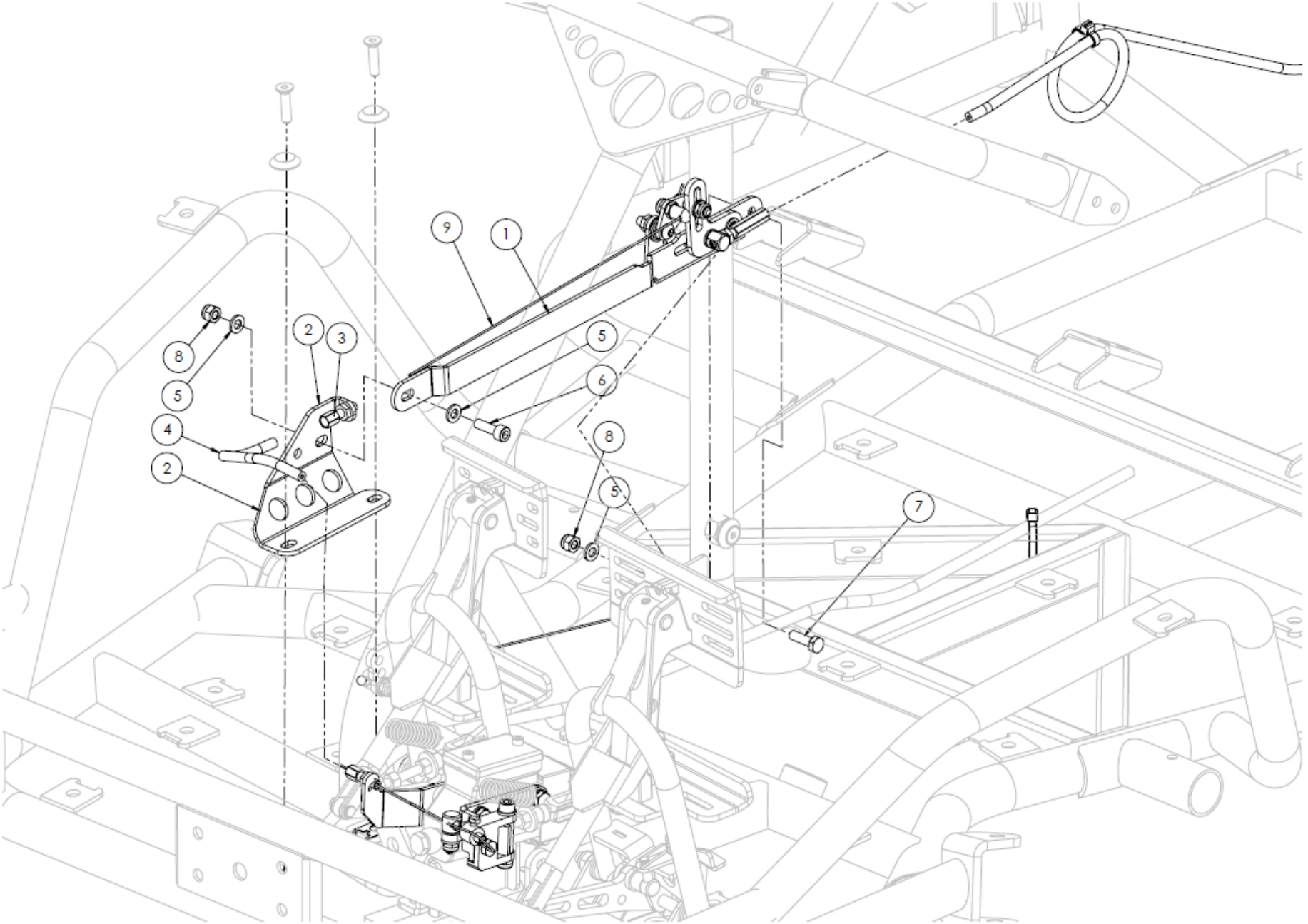

POS.	COD.	DESCRIZIONE	*DESCRIPTION*
1	FK0.01067	Piastra supporto filo evo comp centbi	*Cable register holder plate co centbi*
2	SZ0.01050	Supporto filo centrale centbi	*Central cable holder centbi*
3	AFS.00257	Registro filo m6	*Cable adjuster m6*
4	AMS.00516	Guaina filo d6 frizione	*Sheater ø6 for clutch*
5	AFN.00105	Rondella 6,5-12x1,5	*Washer 6,5-12x1,5*
6	AFN.00183	Vite m 6x 20 cilindrica 5931	*M6x20 socket head screw*
7	AFN.00233	Vite m 6x 20 esagonale 5739	*M6x20 hexagonal head screw*
8	AFN.00106	Dado m 6 autoblock basso	*Nut m6 low self-locking*
9	AFS.02130	Filo gas mm2200 centurion sp.1,5	*Gas cable cent sp.1,5*

PIASTRA SUPPORTO FILO KIT INTERRUZIONE GAS- GAS CABLE SHUT OFF SUPPORT PLATE BRACKET

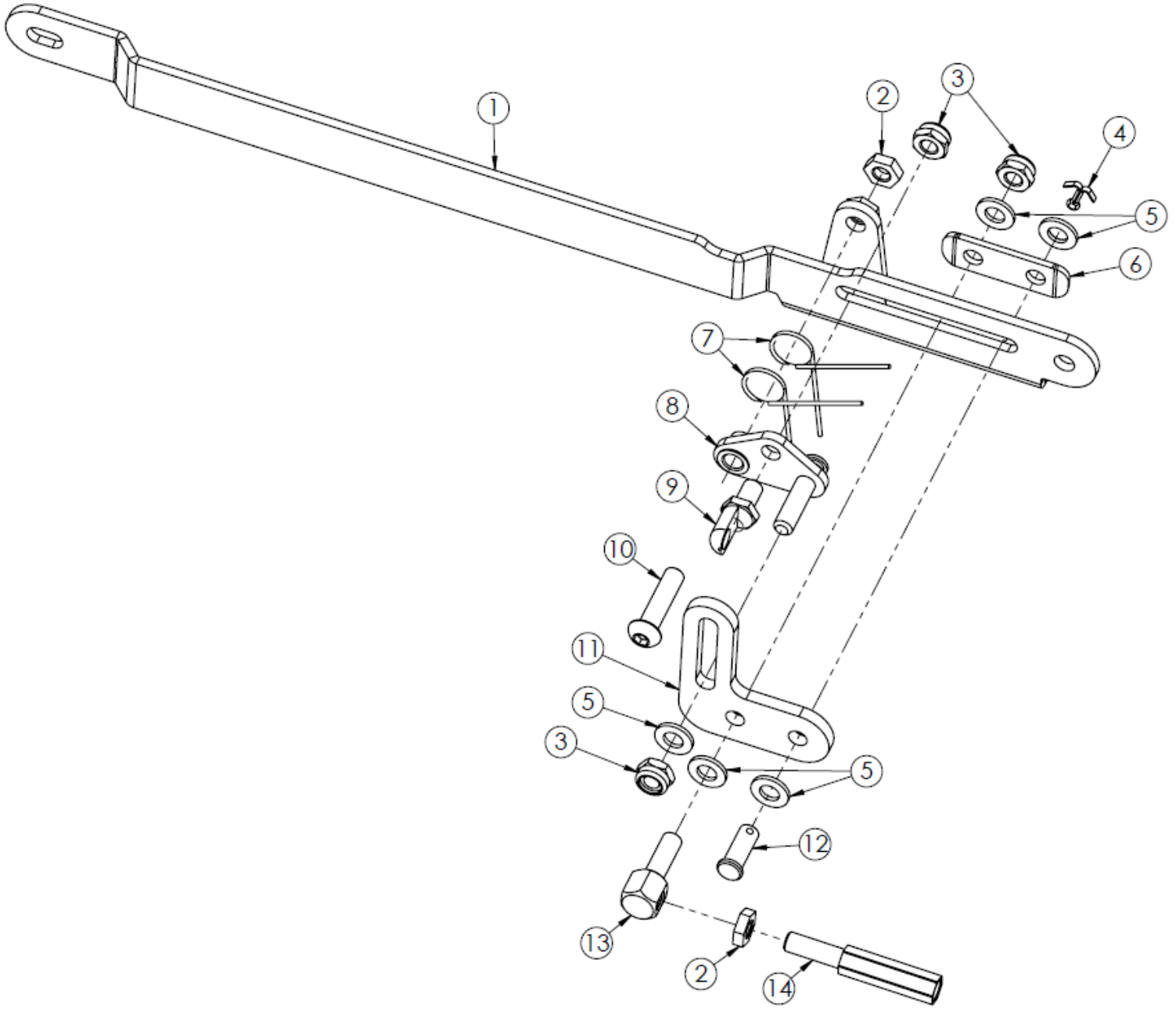

PIASTRA SUPPORTO FILO KIT INTERRUZIONE GAS- GAS CABLE SHUT OFF SUPPORT PLATE BRACKET

POS.	COD.	DESCRIZIONE	*DESCRIPTION*
1	SZ0.01067	Piastra supporto filo evo centbi	*Cable register holder plate centbi*
2	AFN.00093	Dado m 6	*Nut m 6*
3	AFN.00106	Dado m 6 autoblock basso	*Nut m6 low self-locking*
4	AFN.00201	Copiglia	*Master cylinder split pin*
5	AFN.00105	Rondella 6,5-12x1,5	*Washer 6,5-12x1,5*
6	SZ0.01107	Piastrina 14x40x3 centbi	*Plate 14x40x3 centbi*
7	SZ0.01476	Molla triangolo evo centbi	*Triangle spring evo centbi*
8	SZ0.01546	Triangolo evo centbi	*Evo triangle centbi*
9	SZ0.01630	Supporto filo freno evo centbi	*Cable register holder centbi*
10	AFN.01917	Vite m 6x 25 bombata 7380	*M 6x 25 convex head screw*
11	SZ0.00907	Supporto filo/molla pedale fr. centbi	*Cable/spring register holder centbi*
12	SBN.00200	Spina pompa freni mm16	*Master cylinder pin 16mm black*
13	SZ0.00420	Raccordo filo gas evo centbi	*Gas cable fitting evo centbi*
14	SZ0.00390	Registro filo m6 centbi	*Cable adjuster m8 centbi*

LEVA INTERRUZIONE GAS - GAS SHUT OFF LEVER

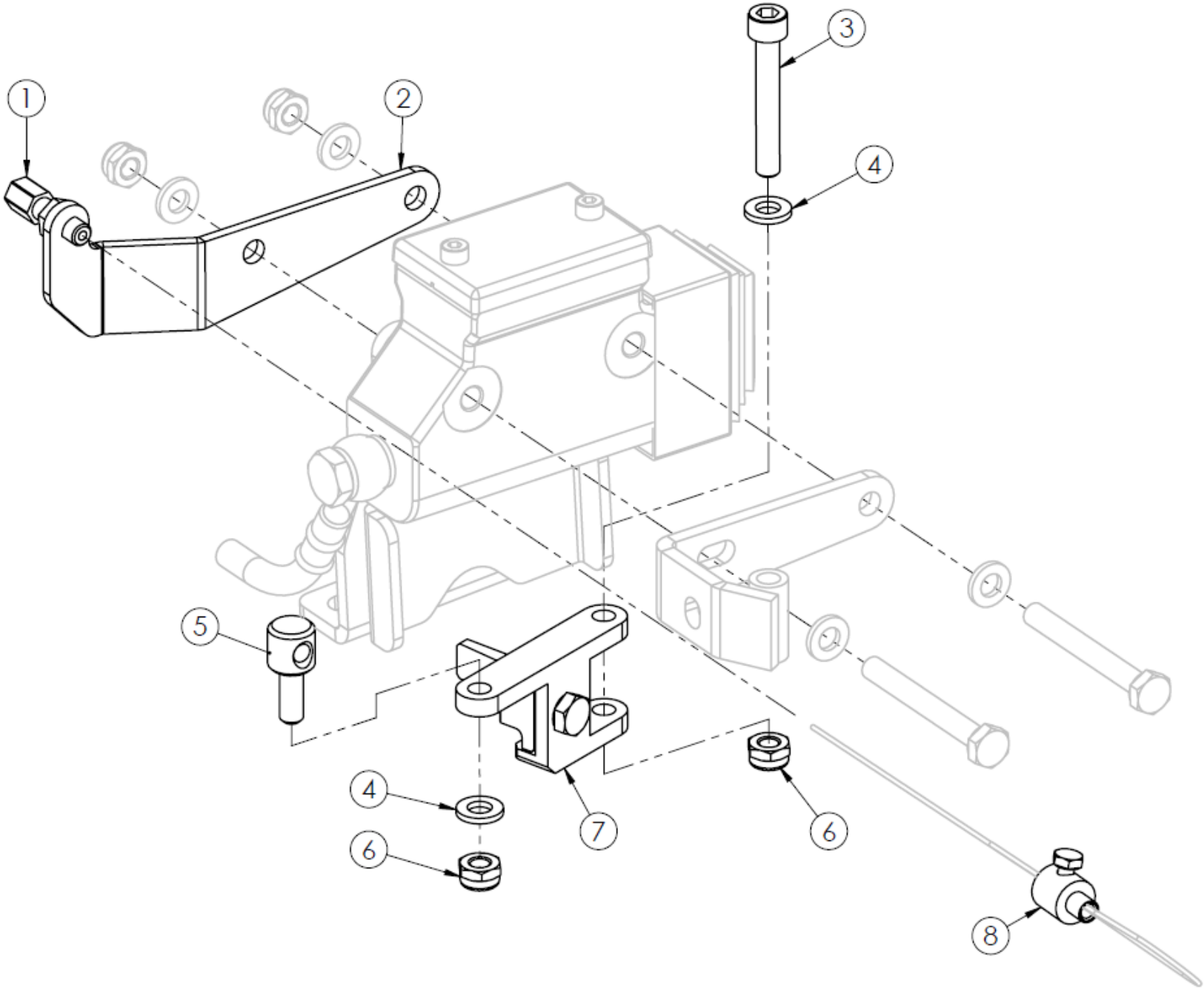

POS.	COD.	DESCRIZIONE	*DESCRIPTION*
1	AFS.00257	Registro filo m6	*Cable adjuster m6*
2	SZ0.01060	Supporto filo pedale freno centbi	*Cable holder for brake pedal centbi*
3	AFN.00368	Vite m 6x 40 cilindrica 5931	*M 6x40 socket head screw*
4	AFN.00105	Rondella 6,5-12x1,5	*Washer 6,5-12x1,5*
5	SBN.02396	Perno fermafilo cent	*Cable adjuster pivot black*
6	AFN.00106	Dado m 6 autoblock basso	*Nut m6 low self-locking*
7	FK0.01815	Biella pedale completa ass centurionbi	*Pedal conrod assy centurionbi*
8	AFS.02130	Filo gas mm2200 centurion sp.1,5	*Gas cable cent sp.1,5*

ASSALE – REAR AXLE

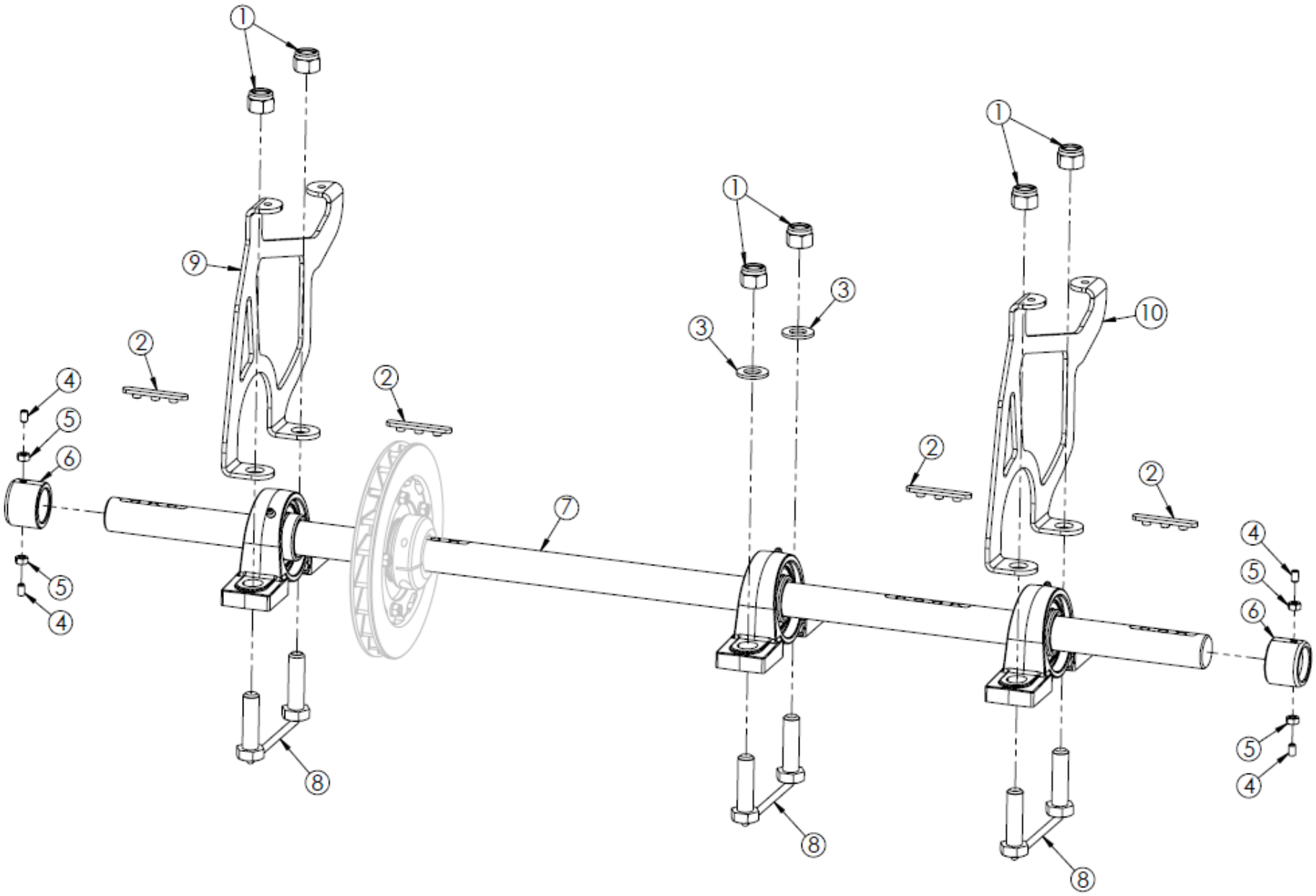

POS.	COD.	DESCRIZIONE	*DESCRIPTION*
1	AFN.02682	Dado m14 autoblock alto	*M14 tall selflocking nut*
2	AFS.0024701	Chiavetta assale 3 pioli brunita	*Rear axle keyway 3 pins*
3	AFN.01564	Rondella 15x30x2,5	*Washer 15-30x2,5*
4	AFN.00357	Grano m 6x10 (piantone-pompa v06)	*Grub screw m6x10*
5	AFN.00093	Dado m 6	*Nut m 6*
6	SZ0.02519	Boccola centurion fissaggio assale	*Rear axle clamp bushing cent*
7	FZ0.02754	Assale 30 bianco centurionbi	*Centurionbi rear axle 30 white*
8	SZ0.02368	Coppia viti cusc. assale cent 14x45	*Axle bearing couple of screws cent*
9	SZ0.2249S	Supporto carena posteriore sx centurion	*Rear fairing support lf centurion*
10	SZ0.2249D	Supporto carena posteriore dx centurion	*Rear fairing support rh centurion*

DISCO FRENO & MOZZO – BRAKE DISC & HUB

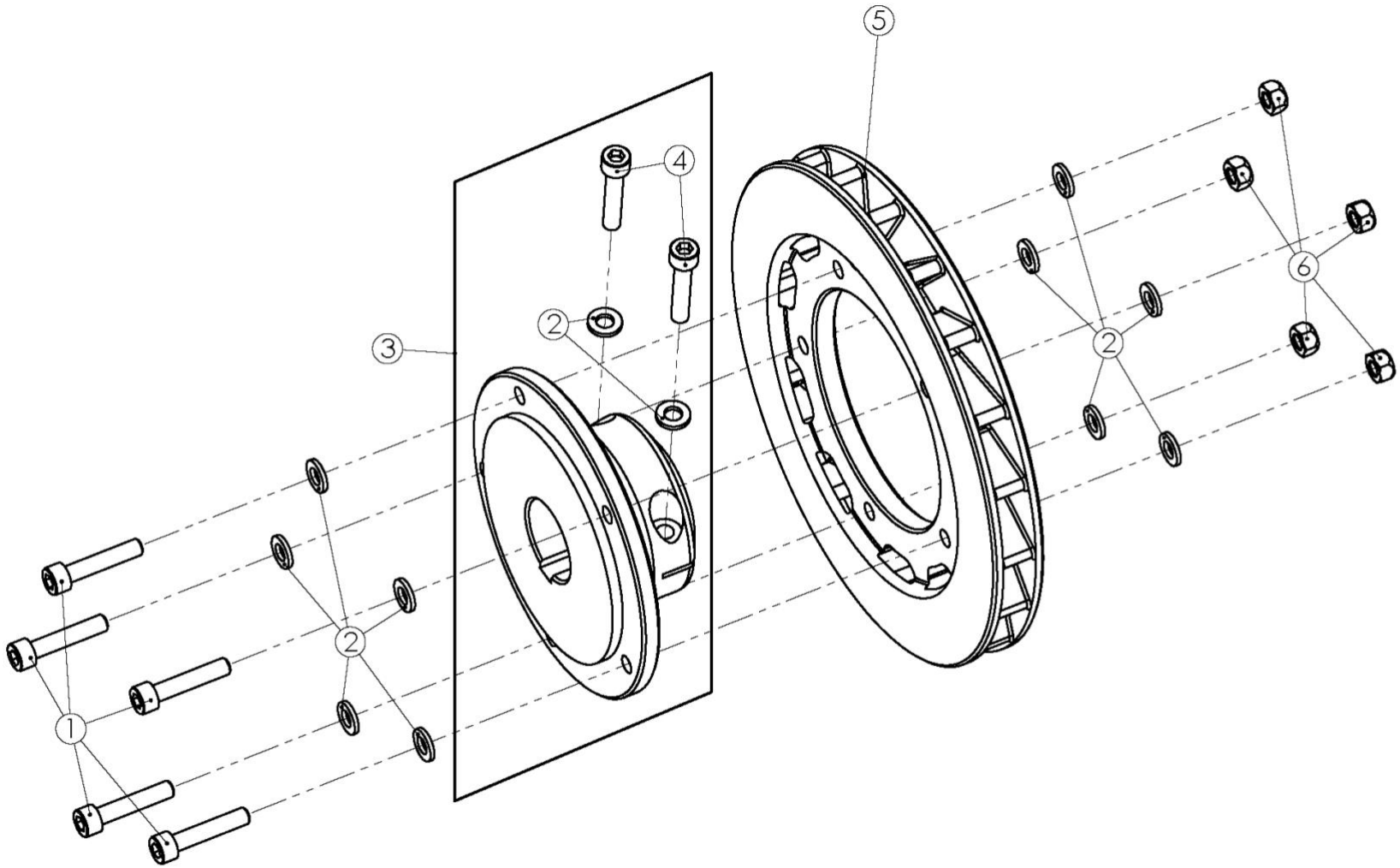

POS.	COD.	DESCRIZIONE	*DESCRIPTION*
1	AFN.00478	Vite m 6x 25 cilindrica 5931	*M 6x25 socket head screw*
2	AFN.06156	Rondella 6,5-10x1 acciaio inox	*Brass washer 6,5-10x1 inox*
3	FM0.02344	Mozzo disco posteriore al 30 cent completo	*Rear brake disc hub 30 complete cent*
4	AFN.02154	Vite m 6x 35 cilindrica 12.9 5931	*M 6x35 socket head screw 12.9*
5	SL1.02345	Rett>disco freno posteriore cent	*Rear brake disc cent*
6	AFN.00234	Dado m 6 metalblock	*Nut m 6 metalblock*

PINZA FRENO – BRAKE CALIPER

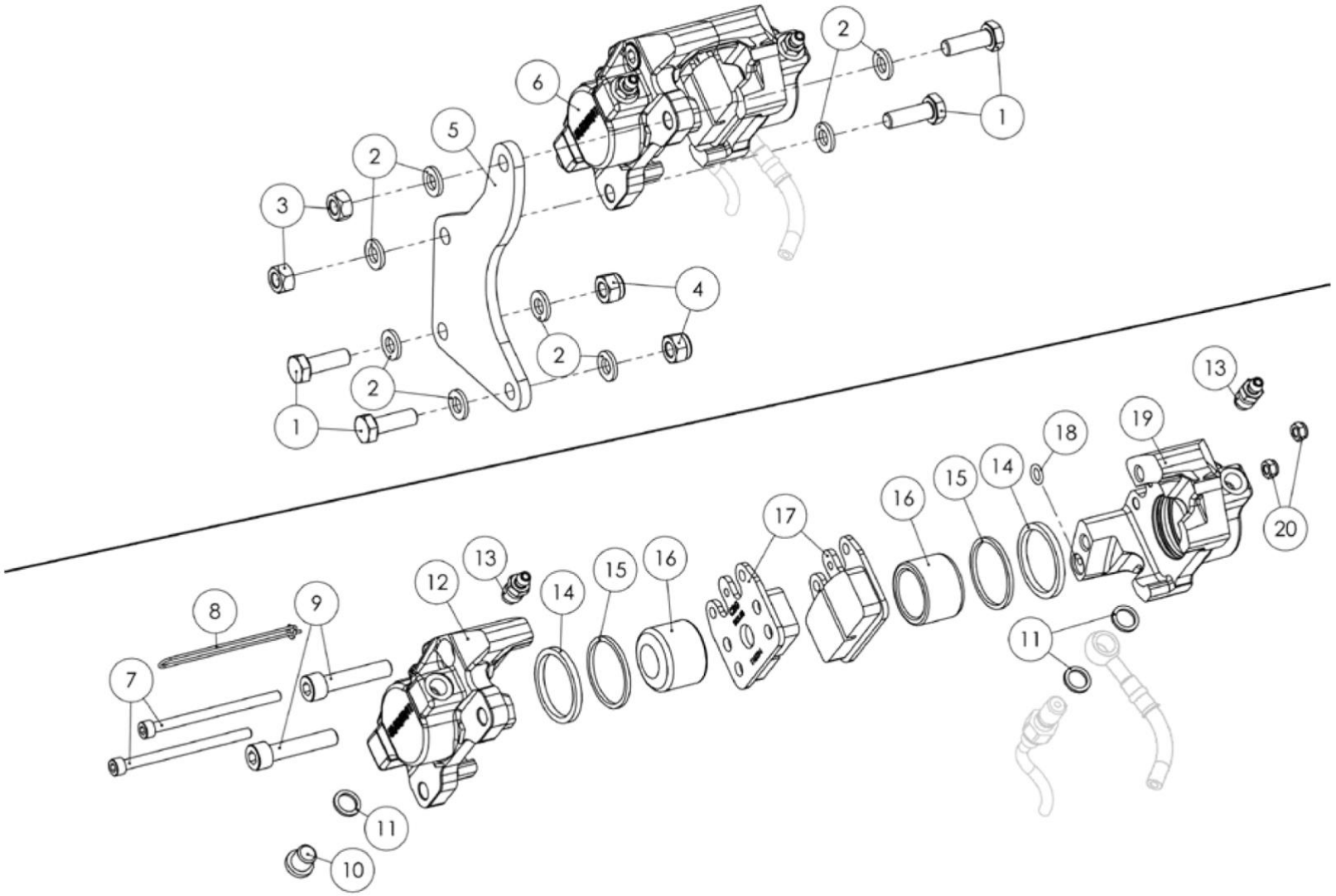

POS.	COD.	DESCRIZIONE	*DESCRIPTION*
1	AFN.00107	Vite m 8x 25 esagonale 5739	*M 8x25 hexagonal head screw*
2	AFN.00133	Rondella 8,5-14x1	*8,5-14x1 washer*
3	AFN.00286	Dado m 8 metalblock	*Nut m 8 metalblock*
4	AFN.00128	Dado m 8 autoblock alto	*Nut m8 high self-locking*
5	FC0.02398	Piastra supporto pinza v05 centbi	*Rear brake caliper v05 support centbi*
6	FM0.02339	Pinza posteriore v05 g comp.centurion	*Rear brake caliper v05 iron co cent*
7	AFN.01679	Vite m 5x 80 cilindrica 5931	*M 5x80 socket head screw*
8	AFS.01682	Spina sicurezza pinza post.v05/v08	*Rear safety pin*
9	AFN.00159	Vite m 8x 45 cilindrica 5931	*M 8x45 socket head screw*
10	SBN.00369	Tappo m10 v09/10	*Caliper cap m10 v09/v10*
11	AFN.00186	Rondella 10,5-14x2 rame	*Copper washer 10,5-14x2*
12	SDN.1678S	Semi pinza posteriore v05 32 sx nera	*Half rear brake caliper v05 32 lf black*
13	SZ0.00184	Spurgo m10 v09/10	*Bleeder m10*
14	AFS.01051	Gommino pinza posteriore ø32 v05/v08	*Rear brake caliper seal ø32*
15	AFS.01681	Gommino parapolvere ø32 v05/v08	*Dust guard seal ø32*
16	SD1.02338	Pistoncino pinza v05 centurion	*Brake caliper v05 piston cent*
17	AFS.04205	Pastiglia freno post.v11 rossa sp.15mm (pinza ø30)	*Rear brake pad v11 15 mm red*
18	AFN.00182	Or pinza 6 x 2 v09/10 posteriore	*Rear o-ring caliper 6x2 v09/v10*
19	SDN.1678D	Semi pinza posteriore v05 32 dx nera	*Half rear brake caliper v05 32 rh black*
20	AFN.00360	Dado m 5 autoblock basso	*Nut m 5 low self-locking*

PINZA FRENO ANTERIORE – FRONT BRAKE CALIPER

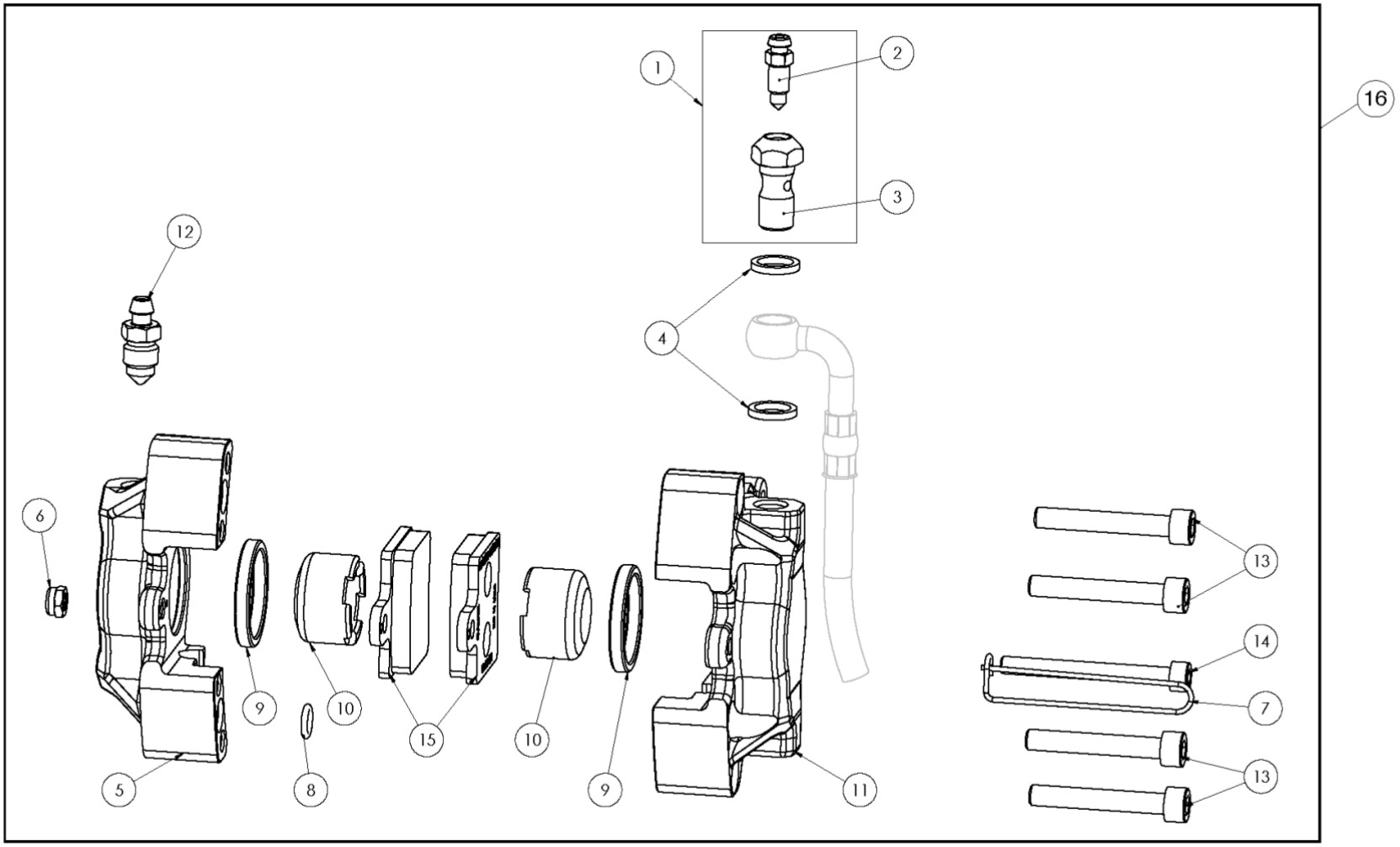

POS.	COD.	DESCRIZIONE	*DESCRIPTION*
1	FM0.00308	Raccordo combinato completo	*Bleeder fitting complete*
2	SZ0.00309	Spurgo m 6 up/v04/v05	*Bleeder m6 up/v04/v05*
3	SZ0.00308	Raccordo combinato m10	*Bleeder fitting m10*
4	AFN.00186	Rondella 10,5-14x2 rame	*Copper washer 10,5-14x2*
5	SDN.0365D	Semi pinza ant.v05/up c/orecchie dx nera	*Front half caliper up/v05 right with fittings*
6	SDN.0364D	Semi pinza ant.v05/up dx nera	*Half caliper up/v05 front right black*
7	AFN.00360	Dado m 5 autoblock basso	*Nut m 5 low self-locking*
8	AFS.00187	Spina sicurezza ant.v09/10	*Front safety pin v09/v10*
9	AFN.00182	Or pinza 6 x 2 v09/10 posteriore	*Rear o-ring caliper 6x2 v09/v10*
10	AFS.00179	Gommino pinza anteriore ø26 up/v05/v09	*Piston seal front d26 up v05/09*
11	SD1.00370	Pistoncino pinza v05-v08 ant(ex up-v04)	*V05/v08 front brake caliper piston*
12	SDN.0365S	Semi pinza ant.v05/up c/orecchie sx nera	*Front half caliper up/v05 left*
13	SDN.0364S	Semi pinza ant.v05/up sx nera	*Half caliper up/v05 front left black*
14	SZ0.00184	Spurgo m10 v09/10	*Bleeder m10*
15	AFN.00368	Vite m 6x 40 cilindrica 5931	*M 6x40 socket head screw*
16	AFN.00367	Vite m 5x 55 cilindrica 5931	*M 5x55 socket head screw*
17	AFS.02997	Pastiglia freno ant. v05-09-11 rossa	*Front brake pad v05-09-11 red*
18	FM0.0363D	Pinza anteriore v09/v11 rossa g dx nero compl.	*Front brake caliper v09/v11 iron rh compl*
19	FM0.0363S	Pinza anteriore v09/v11 rossa g sx nero compl.	*Front brake caliper v09/v11 iron lf compl*

SALVA DISCO - PROTECTION PLATE

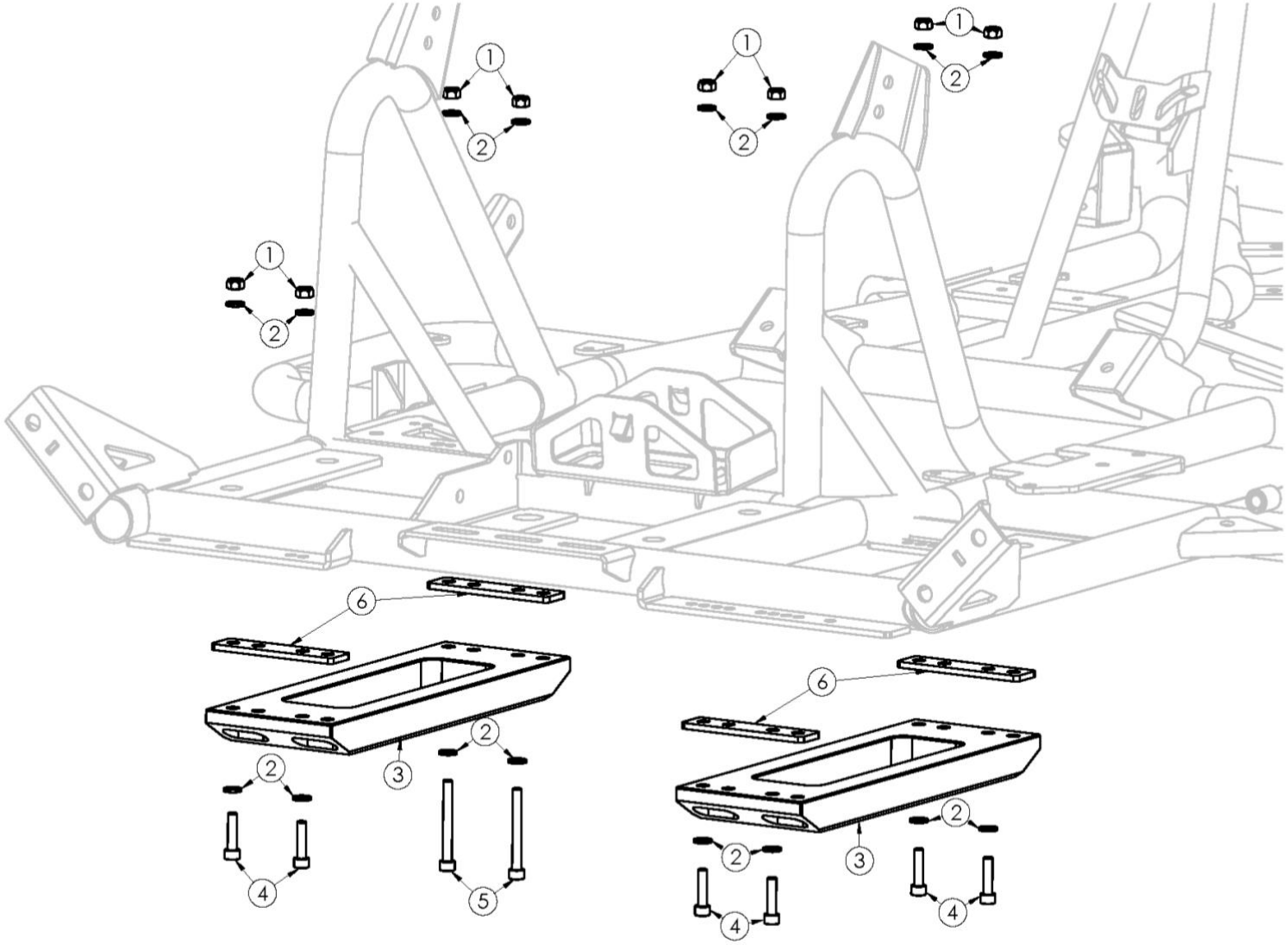

POS.	COD.	DESCRIZIONE	*DESCRIPTION*
1	AFN.00281	Vite m 6x 30 cilindrica 5931	*M 6x30 socket head screw*
2	AFN.00263	Rondella 6,5-18x1,6	*Washer 6,5-18x1,6*
3	SL1.02127	Paradisco parapuleggia cent	*Disc-plate and pulley-plate cent*
4	AFN.02138	Dado m 6 alto grezzo	*Nut m 6 high*
5	AFN.00594	Vite m 6x 60 cilindrica 5931	*M 6x 60 socket head screw*
6	SZ0.01330	Spessore per paradisco cent	*Disc-plate spacer cent*

BATTERIA – BATTERY

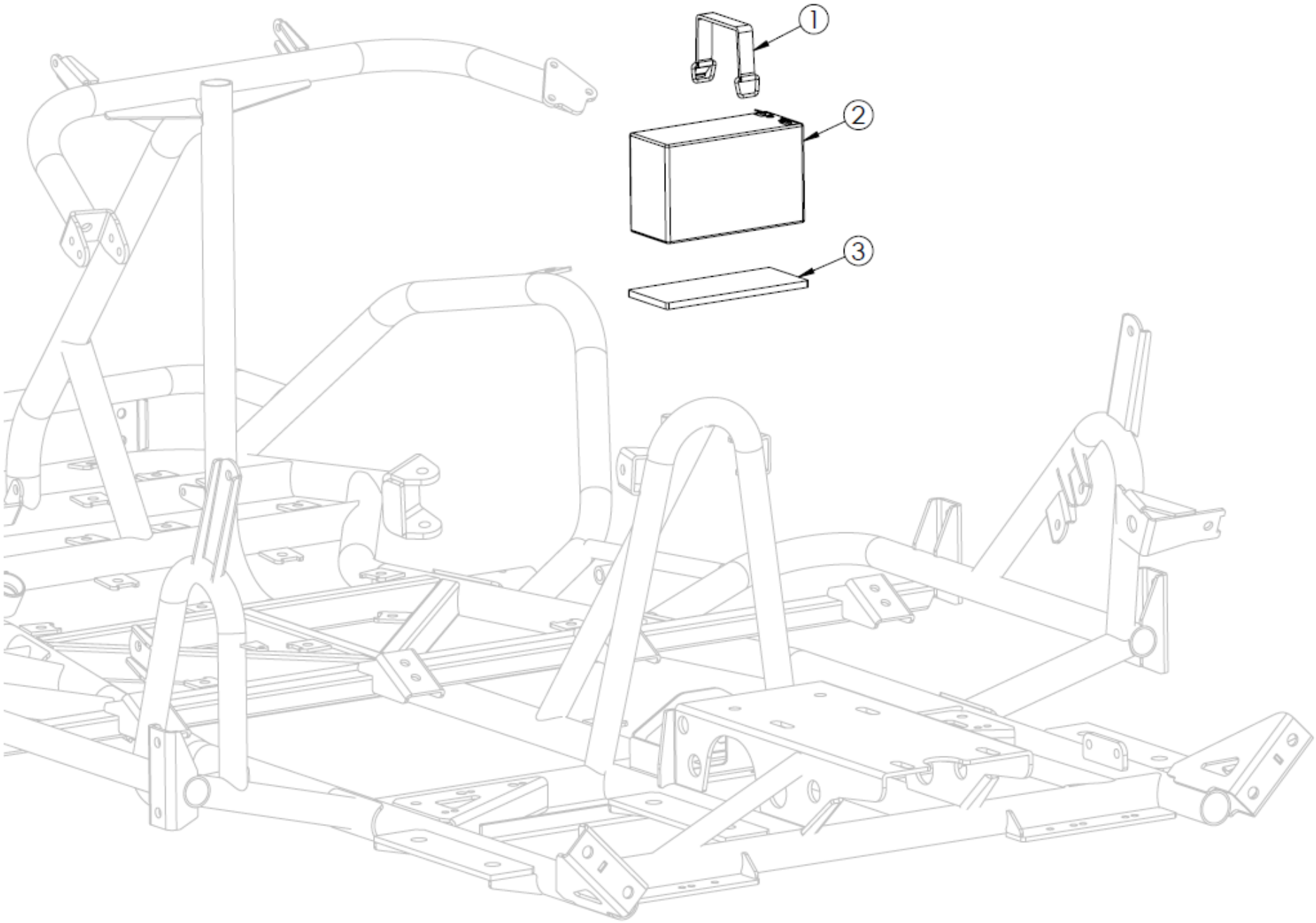

POS.	COD.	DESCRIZIONE	*DESCRIPTION*
1	AFS.03096	Cinghia elastica cin-140 centurionmini (batteria)	*Belt cin-140 centurionmini*
2	AFS.02360	Batteria cent 12v-7,2 ah	*Stop battery v.12 a.7,2 cent*
3	FL1.00820	Gomma batteria centurion	*Rubber battery cent*
4	AFS.03224	Carica batterie cent 12v	*Charger cent 12v*

CABLAGGIO LUCI STOP - REAR STOP LIGHT WIRING

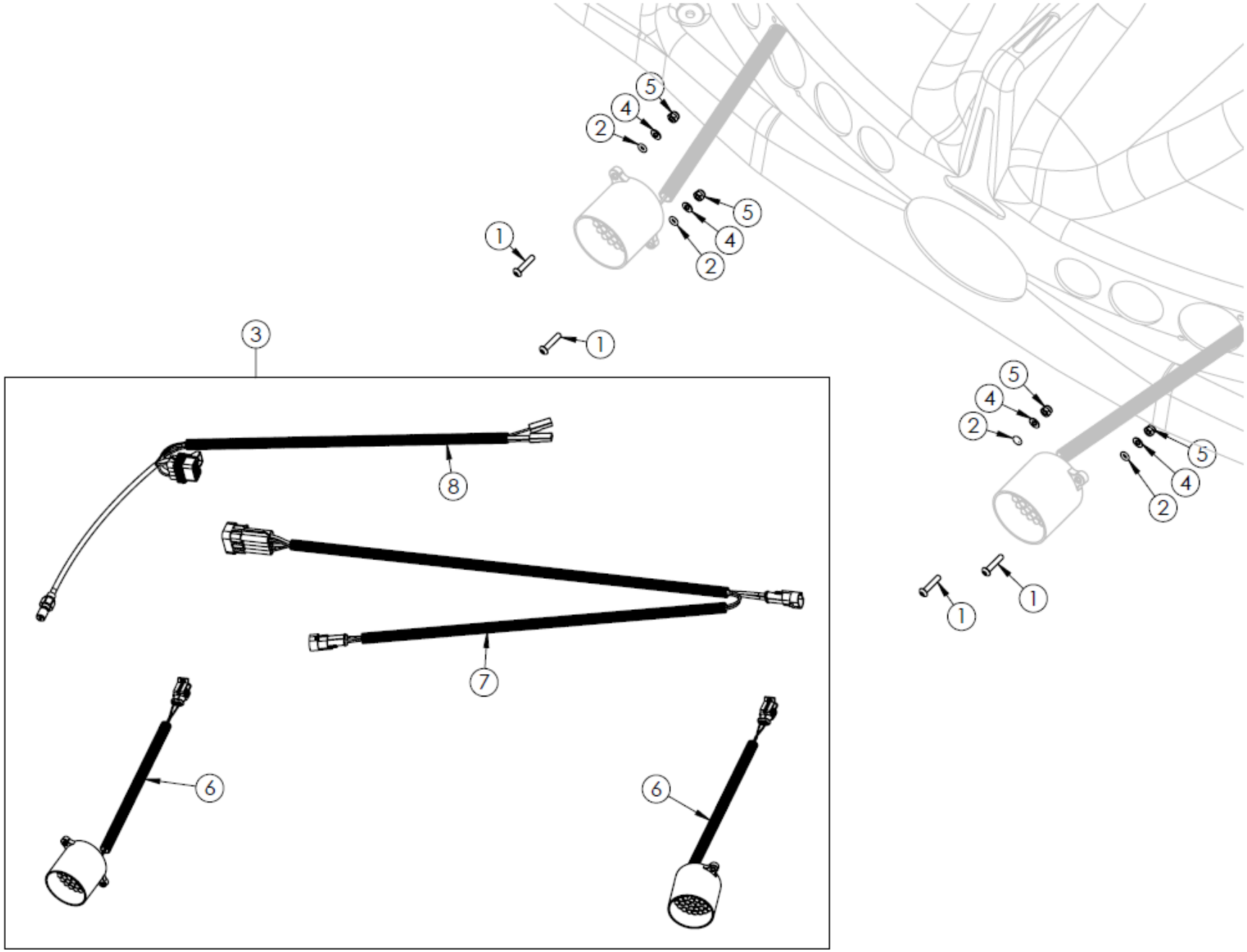

CABLAGGIO LUCI STOP - REAR STOP LIGHT WIRING

POS.	COD.	DESCRIZIONE	*DESCRIPTION*
1	AFN.02543	Vite m 4x 20 bombata 7380 zincata	*M4x20 convex head screw*
2	AFN.02551	Or luce stop posteriore tonda centurion	*Rear-light stop o-ring cent*
3	FM0.01137	Cablaggio completo luci stop centbi senza interr.	*Cabel sys.complete stop light centbi*
4	AFN.02445	Rondella 4,5-12x1,5	*Washer 4,5-12x1,5*
5	AFN.02544	Dado m 4 autoblock basso	*M4 high self-locking nut*
6	AFS.02518	Luce stop posteriore tonda centurion	*Rear stop light round cent*
7	AFS.01137	Cablaggio luci stop cent mod. senza interruttore	*Cabel system stop light cent for system without switch*
8	AFS.02302	Raccordo idro stop centurion	*Idro stop fitting cent*

CINTURE SICUREZZA - SAFETY BELT

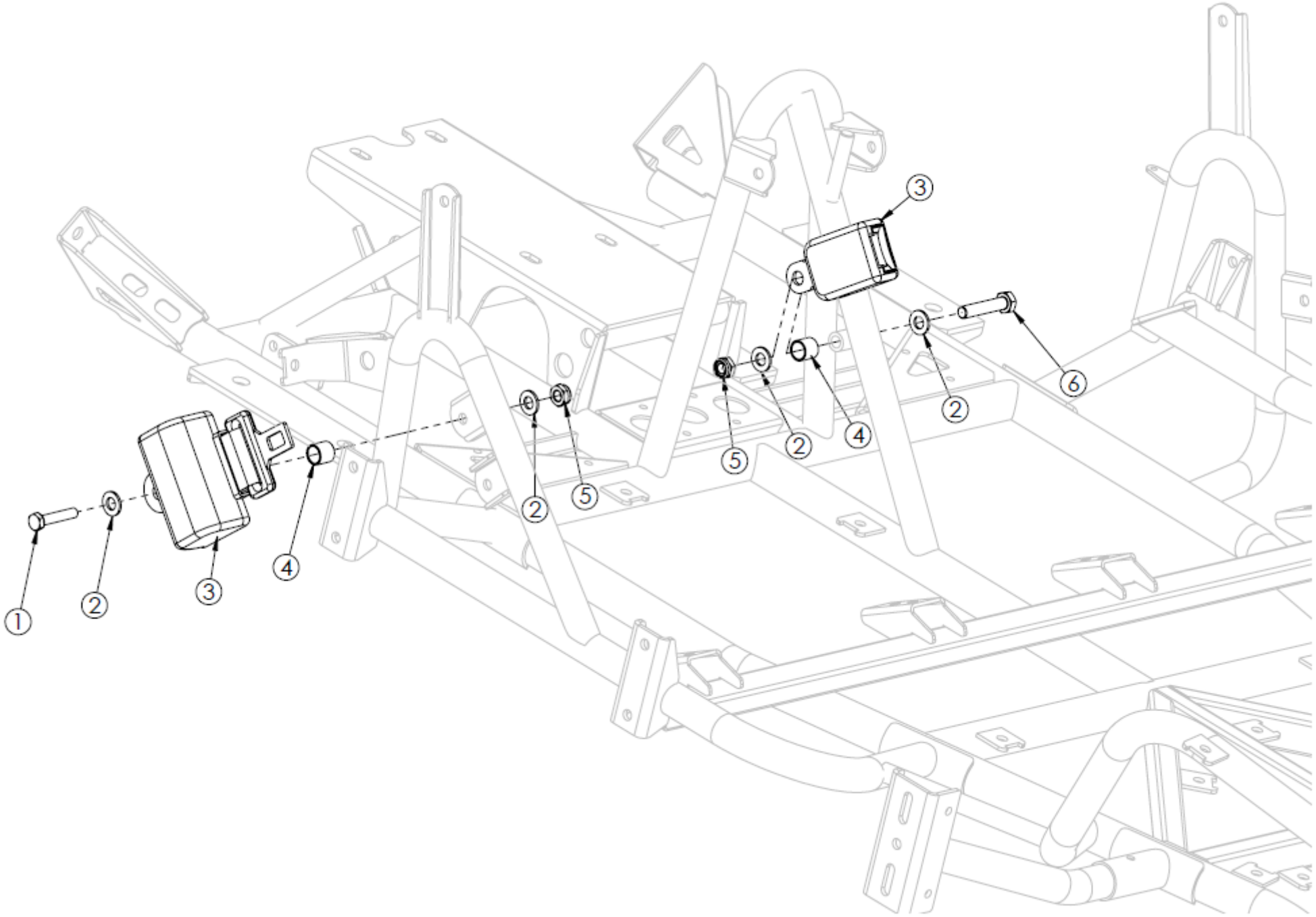

CINTURE SICUREZZA - SAFETY BELT

POS.	COD.	DESCRIZIONE	*DESCRIPTION*
1	TES.10X040	Vite m10x 40 esagonale 5739	*M10x 40 hexagonal head screw*
2	AFN.01637	Rondella 10,5-20x2	*Washer 10,5-20x2*
3	AFS.00966	Cintura sicurezza 2 punti	*Seat safety belt*
4	SBN.02042	Bussola fermo cintura sicurezza centbi	*Safety belt stop bushing centbi*
5	AFN.00657	Dado m10 autoblock basso	*Nut m10 low self-locking*
6	AFN.00678	Vite m10x 50 esagonale 5739	*M10x 50 hexagonal head screw*

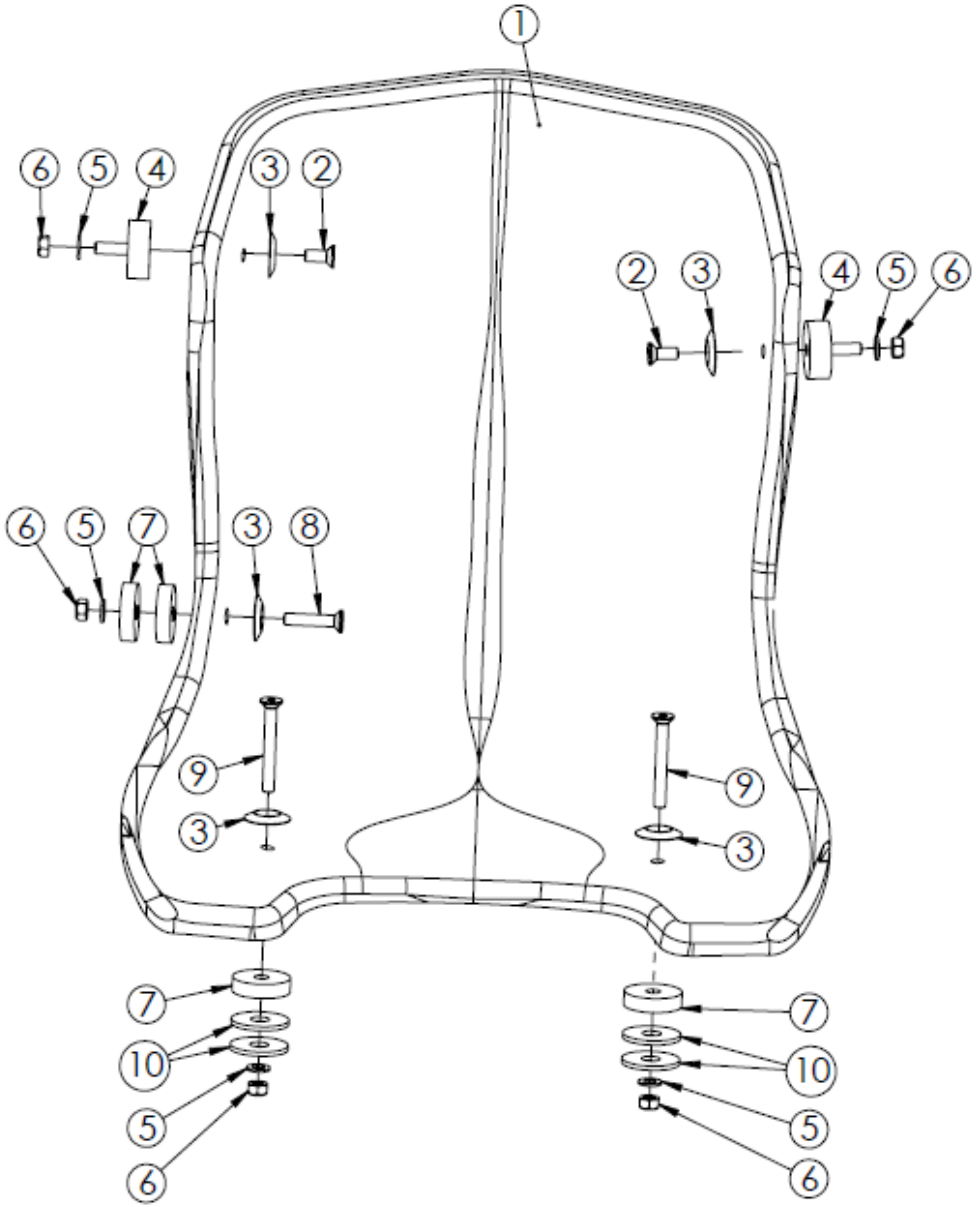
1
6 5 4 3 2
2 3 4 5 6
6 5 7 3 8
9 3
9 3
7 10 5 6
7 10 5 6

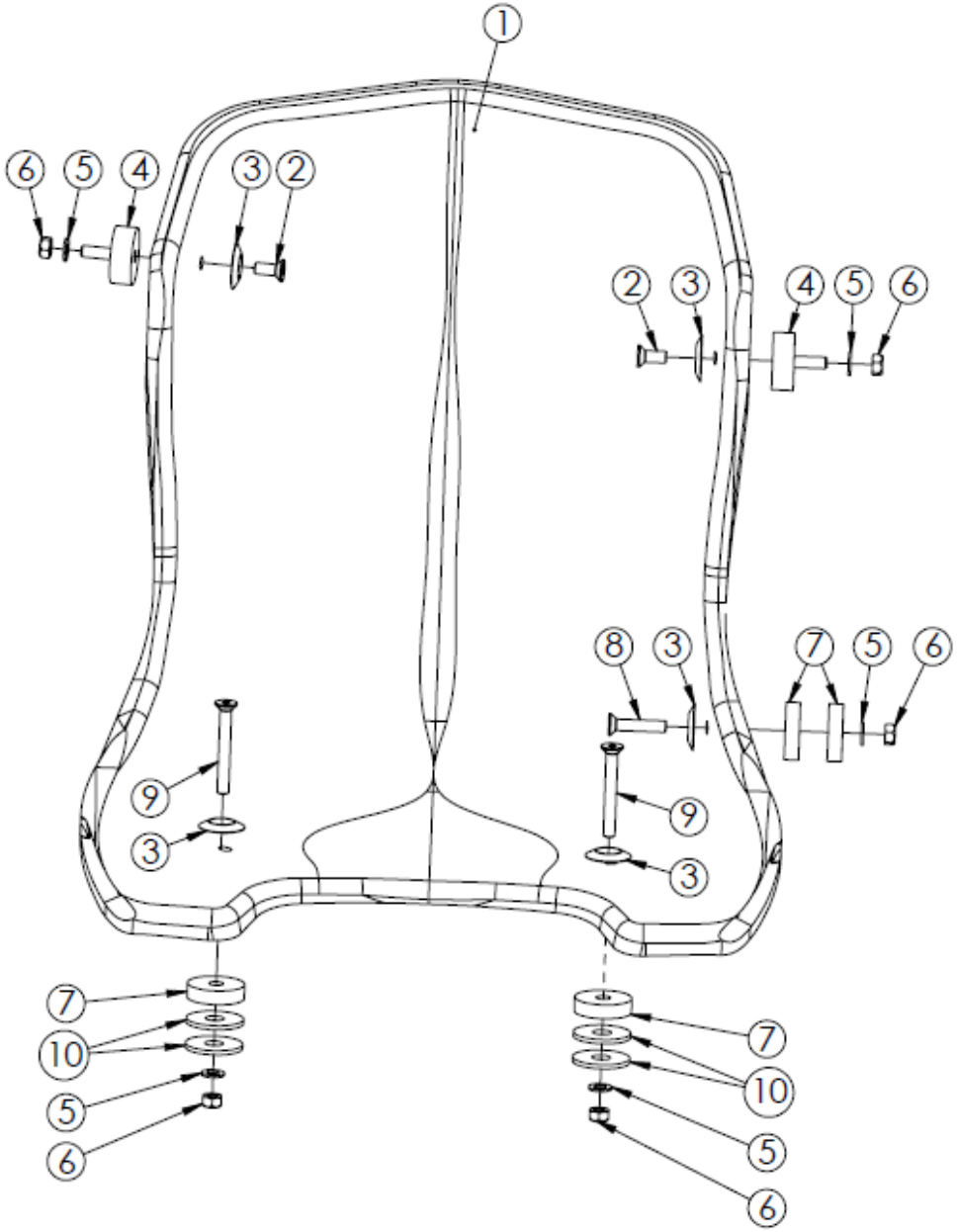
1
6 5 4 3 2
2 3 4 5 6
8 3 7 5 6
9 3
9 3
7 10 5 6
7 10 5 6

POS.	COD.	DESCRIZIONE	*DESCRIPTION*
1	AFS.00451	Sedile in plastica sp.6 centurion	*Plastic seat cent*
2	AFN.00290	Vite m 8x20 svasata 5933	*M8x20 countersunk head screw*
3	FAN.00260	Rondella 8 sedile all.nera	*Aluminum seat washer black 8*
4	AFS.01650	Silentblock m+f m 8 ø40x20 centurion	*Silentblock m+f m 8 40x20 cent*
5	AFN.00129	Rondella 8,5-17x1,5	*Washer 8,5-17x1,5*
6	AFN.00128	Dado m 8 autoblock alto	*Nut m8 high self-locking*
7	AFS.00088	Gommino culla marmitta	*Exhaust cradle rubber*
8	AFN.00483	Vite m 8x 40 svasata 5933	*M 8x 40 countersunk head screw*
9	AFN.00682	Vite m 8x 60 svasata 5933	*M 8x 60 countersunk head screw*
10	AFN.00125	Rondella 10,5-30x2,5	*Washer 10,5-30x2,5*

BALESTRA – LEAF SPRING

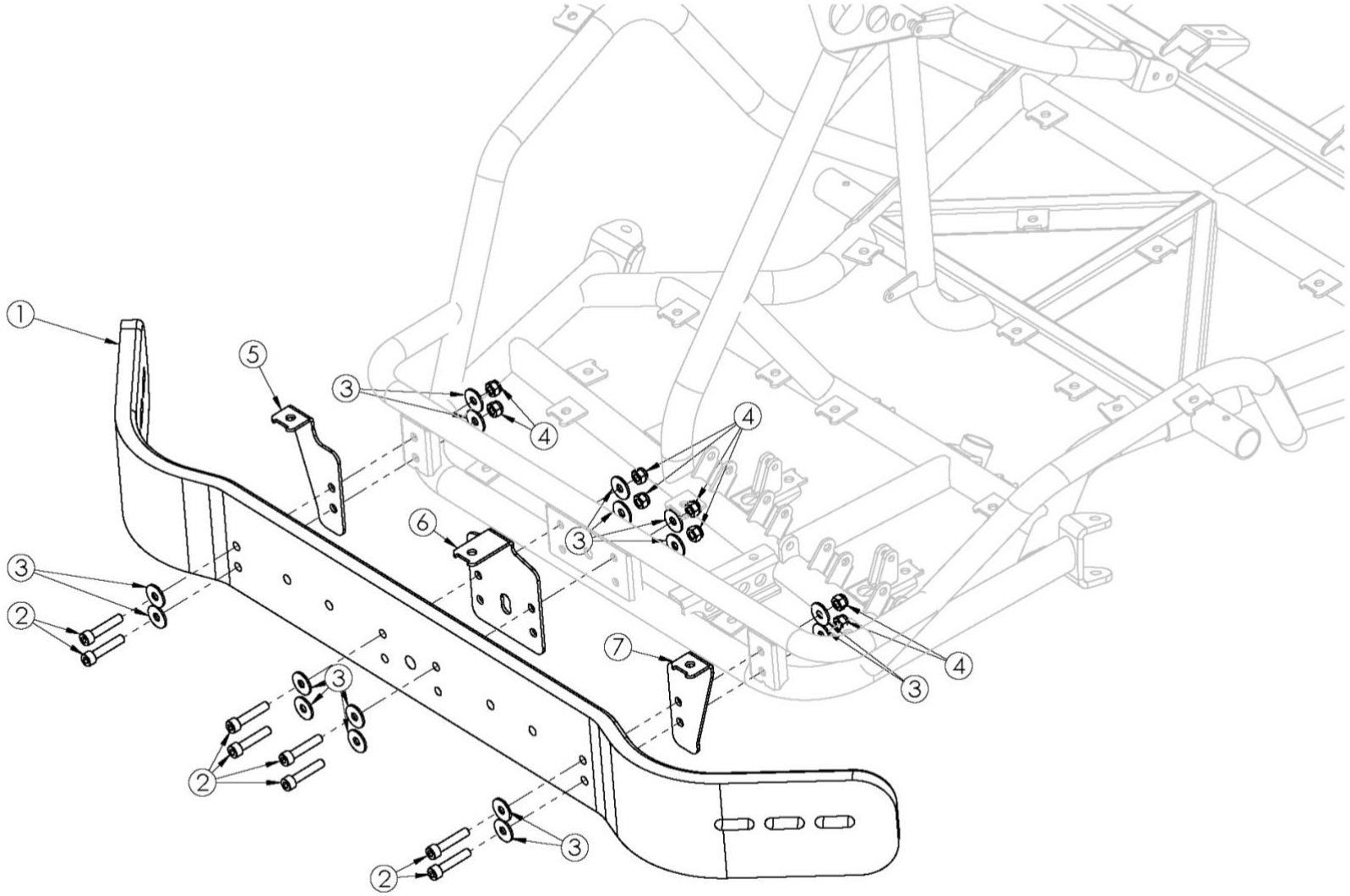

POS.	COD.	DESCRIZIONE	*DESCRIPTION*
1	AFS.0216109	Balestra anteriore centrale centurion	*Front-central leaf spring cent*
2	AFN.03781	Vite m 8x 40 cilindrica 12.9 4762	*M 8x 40 socket head screw*
3	AFN.02415	Rondella 8,5-24x2	*8,5-24x2 washer*
4	AFN.00128	Dado m 8 autoblock alto	*Nut m8 high self-locking*
5	SZA.02240	Piastra supporto spoiler(a) centbi	*Front spoiler plate support(a)centbi*
6	SZB.02240	Piastra supporto spoiler(b) centbi	*Front spoiler plate support(b)centbi*
7	SZC.02240	Piastra supporto spoiler(c) centbi	*Front spoiler plate support(c) centbi*

PROTEZIONE ANTERIORE - FRONT PROTECTION

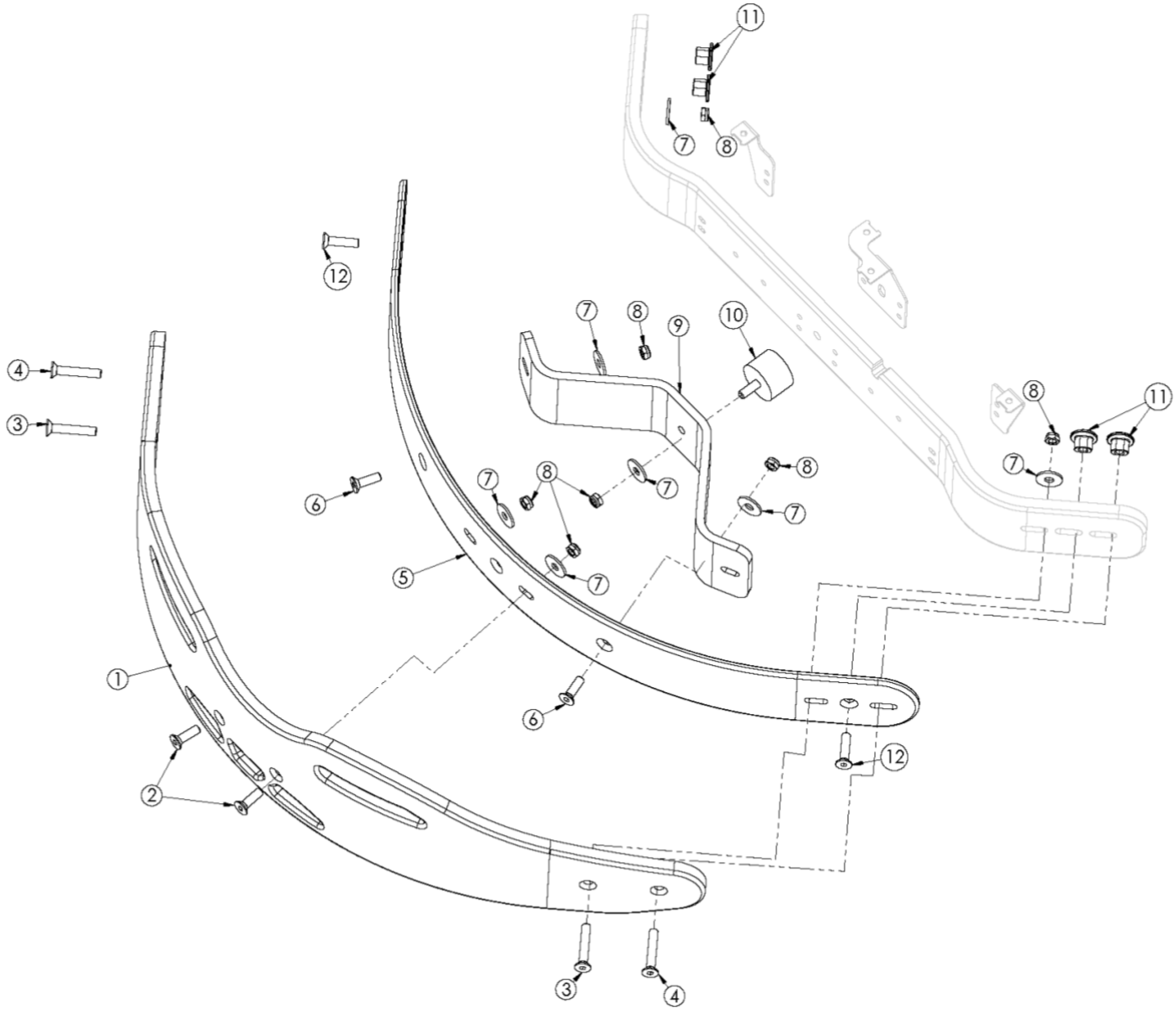

POS.	COD.	DESCRIZIONE	*DESCRIPTION*
1	AFS.04911	Fascia paraurti anteriore cent con protez. pedali	*Centurion front buffer band with side protection*
2	AFN.02294	Vite m12x 50 svasata 5933	*M12x50 countersunk head screw*
3	AFN.02373	Vite m12x 80 svasata 5933	*M12x80 countersunk head screw*
4	AFN.00676	Vite m12x 60 svasata 5933	*M12x60 countersunk head screw*
5	AFS.0216305	Fascia paracolpi centrale ant.int cent	*Int.front-central buffer band cent*
6	AFN.02293	Vite m12x 40 svasata 5933	*M12x40 countersunk head screw*
7	AFN.02416	Rondella 12 -36x3	*12-36x3 washer*
8	AFN.02394	Dado m12 autoblock basso	*M12 low self-locking nut*
9	AFS.0315402	Balestra anteriore centurion	*Front leaf spring cent*
10	AFS.02509	Silentblock m+f m12 ø60x40 centurion	*M12 60x40 silentblock m+f cent*
11	SZ0.00701	Dado m12 ovale 14x25	*Special nut m12 14x25*
12	AFN.03610	Vite m12x 35 svasata 5933	*M12x 35 countersunk head screw*

PROTEZIONE POSTERIORE - REAR PROTECTION

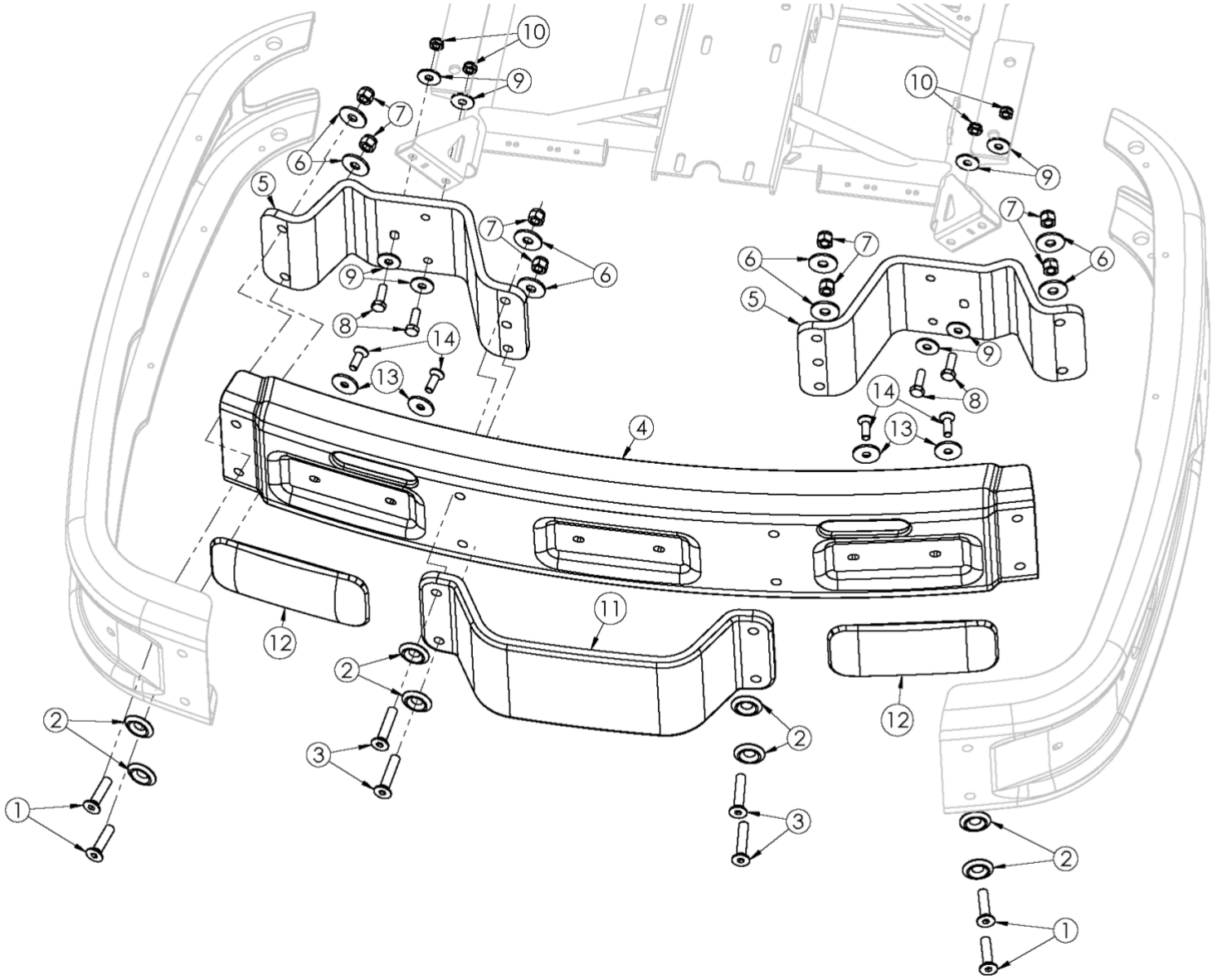

POS.	COD.	DESCRIZIONE	*DESCRIPTION*
1	AFN.02294	Vite m12x 50 svasata 5933	*M12x50 countersunk head screw*
2	SZ0.02367	Rondella 12 svasata bullone cent	*Centurion countersunk bolt m12 washer*
3	AFN.00676	Vite m12x 60 svasata 5933	*M12x60 countersunk head screw*
4	AFS.02160	Fascia paracolpi centrale post.centurion	*Rear-central buffer band cent*
5	AFS.02166	Balestra posteriore centurion	*Rear leaf spring cent*
6	AFN.02416	Rondella 12 -36x3	*12-36x3 washer*
7	AFN.02394	Dado m12 autoblock basso	*M12 low self-locking nut*
8	AFN.02292	Vite m10x 30 esagonale 5739	*M10x 30 hexagonal head screw*
9	AFN.00125	Rondella 10,5-30x2,5	*Washer 10,5-30x2,5*
10	AFN.02393	Dado m10 autoblock alto	*Nut m10 high self-locking*
11	AFS.02473	Balestra posteriore centrale centurionbi	*Rear leaf spring centbi*
12	AFS.00570	Placca paracolpi posteriore cent arancione	*Plastic plate rear cent*
13	SL1.03222	Rondella 10 svasata	*Countersunk washer m10*
14	TSV.10X030	Vite m10x 30 svasata 5933	*M10x 30 countersunk head screw*

PROTEZIONE LATERALE DESTRA - RIGHT SIDE PROTECTION

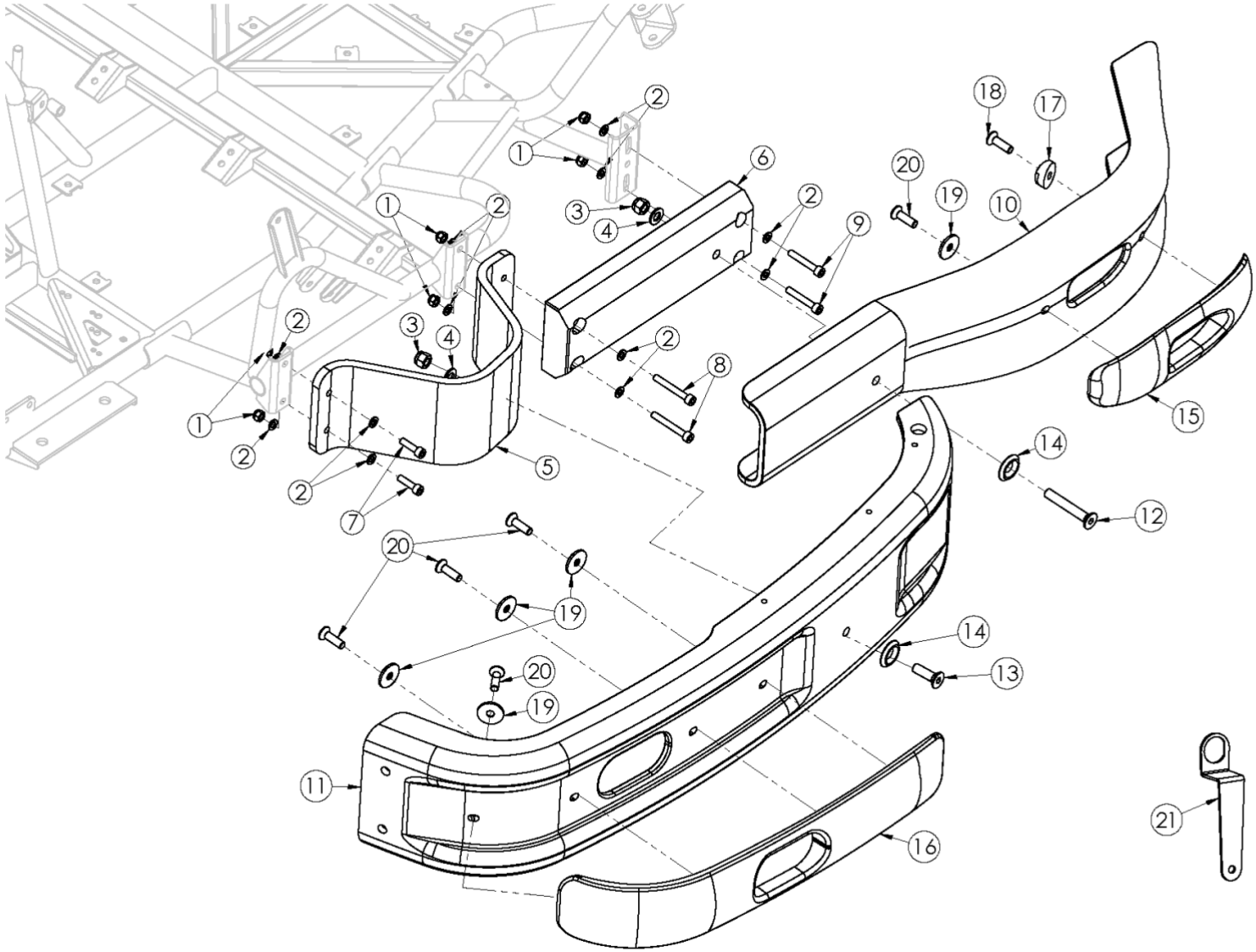

POS.	COD.	DESCRIZIONE	*DESCRIPTION*
1	AFN.00128	Dado m 8 autoblock alto	*Nut m8 high self-locking*
2	AFN.02415	Rondella 8,5-24x2	*8,5-24x2 washer*
3	AFN.02364	Dado m12 autoblock alto	*M12 high self-locking nut*
4	AFN.02416	Rondella 12 -36x3	*12-36x3 washer*
5	AFS.3158D	Balestra laterale dx cent 2014	*Side leaf spring rh cent*
6	SL1.02321	Piastra base protezione centbi	*Protection base plate centbi*
7	AFN.00827	Vite m 8x 30 cilindrica 5931	*M 8x30 socket head screw*
8	AFN.02291	Vite m 8x 60 esagonale 5739	*M 8x 60 hexagonal head screw*
9	AFN.00681	Vite m 8x 50 cilindrica 5931	*M8x50 hex socket screw*
10	AFS.02723	Fascia paracolpi ant. lat. centbi - centmini	*Front side leaf band centbi*
11	AFS.2160DS	Fascia paracolpi lat. post. dx/sx cent	*Centurion rear side buffer band rh/lf*
12	AFN.02373	Vite m12x 80 svasata 5933	*M12x80 countersunk head screw*
13	AFN.02293	Vite m12x 40 svasata 5933	*M12x40 countersunk head screw*
14	SZ0.02367	Rondella 12 svasata bullone cent	*Centurion countersunk bolt m12 washer*
15	AFS.01285	Placca paracolpi laterale ant.cent arancione	*Plastic plate front side cent*
16	AFS.01455	Placca paracolpi laterale post.cent arancione	*Plastic plate rear side cent*
17	SL1.03223	Rondella 10 svasata inclinata	*Countersunk washer m10 inclin*
18	TSV.10X035	Vite m10x 35 svasata 5933	*M10x35 countersunk head screw*
19	SL1.03222	Rondella 10 svasata	*Countersunk washer m10*
20	TSV.10X030	Vite m10x 30 svasata 5933	*M10x 30 countersunk head screw*
21	SZ0.03227	Chiave rondella svasata inclinata	*Countersunk washer key(bumper tool)*

PROTEZIONE LATERALE SINISTRA – LEFT SIDE PROTECTION

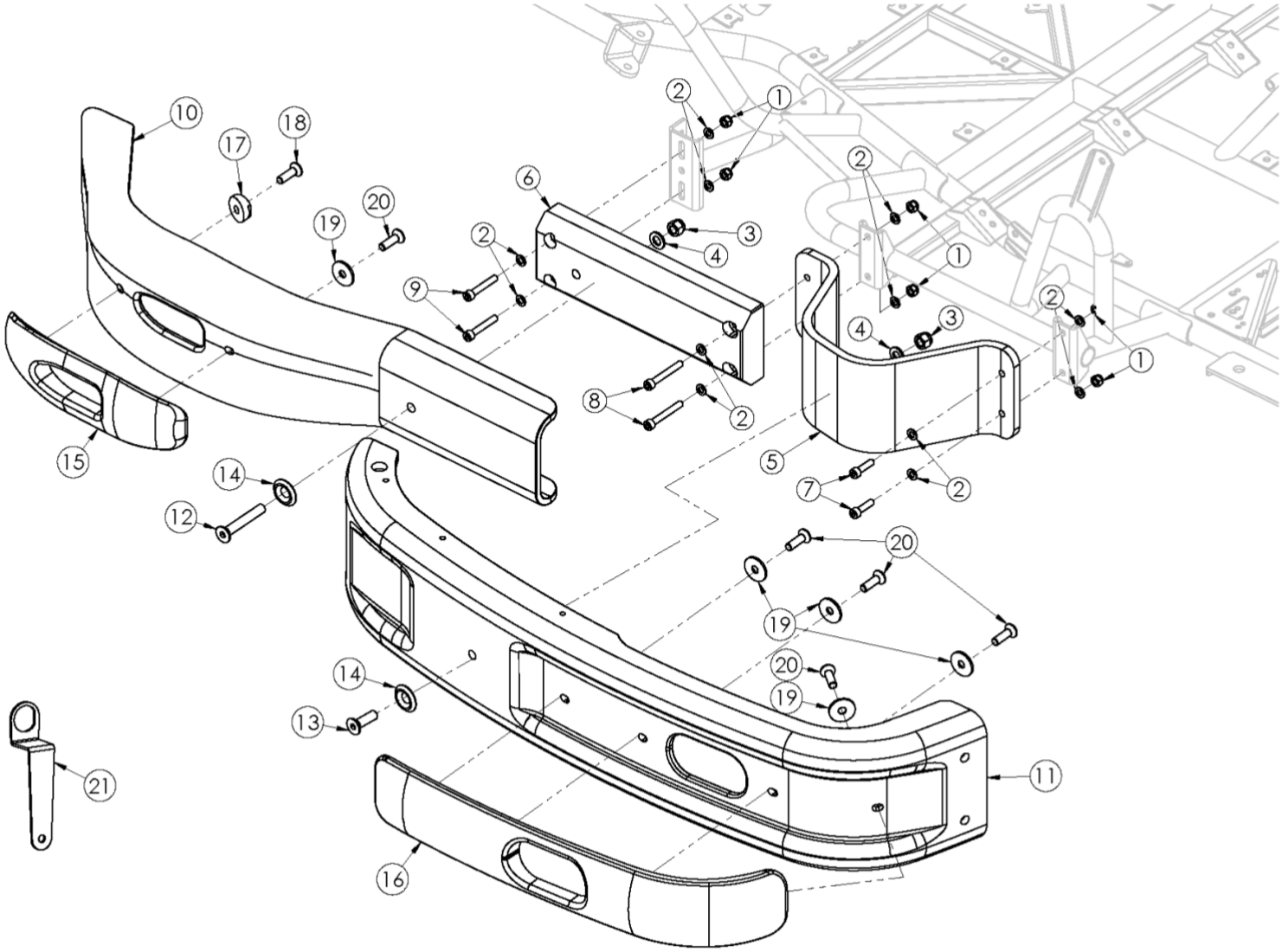

POS.	COD.	DESCRIZIONE	*DESCRIPTION*
1	AFN.00128	Dado m 8 autoblock alto	*Nut m8 high self-locking*
2	AFN.02415	Rondella 8,5-24x2	*8,5-24x2 washer*
3	AFN.02364	Dado m12 autoblock alto	*M12 high self-locking nut*
4	AFN.02416	Rondella 12 -36x3	*12-36x3 washer*
5	AFS.2167S	Balestra laterale sx centurion	*Side leaf spring lf cent*
6	SL1.02321	Piastra base protezione centbi	*Protection base plate centbi*
7	AFN.00827	Vite m 8x 30 cilindrica 5931	*M 8x30 socket head screw*
8	AFN.02291	Vite m 8x 60 esagonale 5739	*M 8x 60 hexagonal head screw*
9	AFN.00681	Vite m 8x 50 cilindrica 5931	*M8x50 hex socket screw*
10	AFS.02723	Fascia paracolpi ant. lat. centbi - centmini	*Front side leaf band centbi*
11	AFS.2160DS	Fascia paracolpi lat. post. dx/sx cent	*Centurion rear side buffer band rh/lf*
12	AFN.02373	Vite m12x 80 svasata 5933	*M12x80 countersunk head screw*
13	AFN.02293	Vite m12x 40 svasata 5933	*M12x40 countersunk head screw*
14	SZ0.02367	Rondella 12 svasata bullone cent	*Centurion countersunk bolt m12 washer*
15	AFS.01285	Placca paracolpi laterale ant.cent arancione	*Plastic plate front side cent*
16	AFS.01455	Placca paracolpi laterale post.cent arancione	*Plastic plate rear side cent*
17	SL1.03223	Rondella 10 svasata inclinata	*Countersunk washer m10 inclin*
18	TSV.10X035	Vite m10x 35 svasata 5933	*M10x35 countersunk head screw*
19	SL1.03222	Rondella 10 svasata	*Countersunk washer m10*
20	TSV.10X030	Vite m10x 30 svasata 5933	*M10x 30 countersunk head screw*
21	SZ0.03227	Chiave rondella svasata inclinata	*Countersunk washer key(bumper tool)*

SPOILER ANTERIORE – FRONT SPOILER

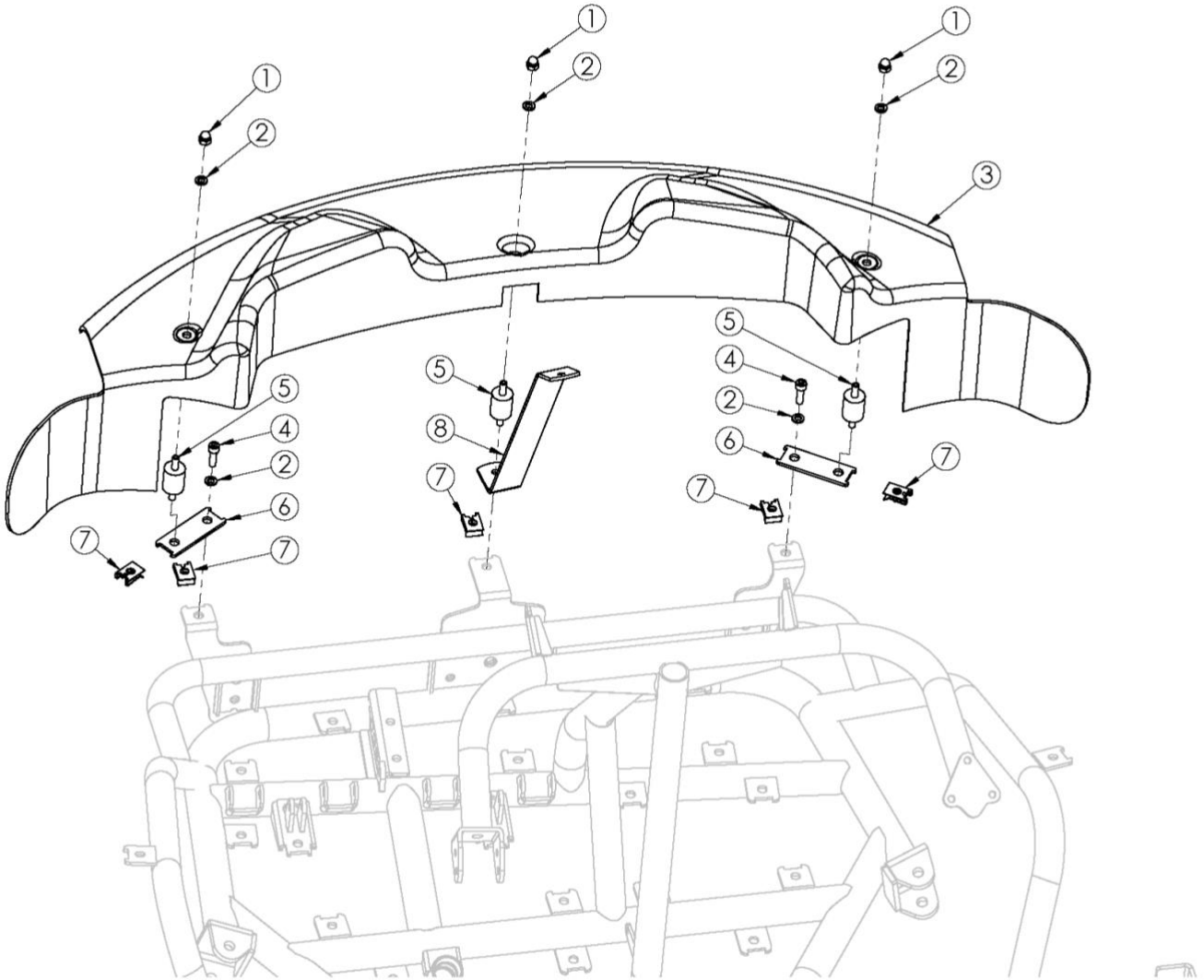

POS.	COD.	DESCRIZIONE	*DESCRIPTION*
1	SBN.02376	Dado m 6 cieco zincato cent	*Blind nut m 6 black cent*
2	SAN.00249	Rondella 6 svasata nera	*Washer 6 countersunk black*
3	AFS.04455	Spoiler anteriore hercules	*Front spoiler hercules*
4	AFN.00261	Vite m 6x 20 svasata 5933	*M6x20 countersunk head screw*
5	AFS.02296	Silentblock m+m m 6 ø25x20 centurion	*Silentblock m+m m 6 25x20 cent*
6	SZ0.02511	Piastra silentblock spoiler dx/sx cent	*Spoiler rh/lf silentblock plate cent*
7	AFS.02327	Clips prestola m6 centurion	*Centurion clips m6 for fitting*

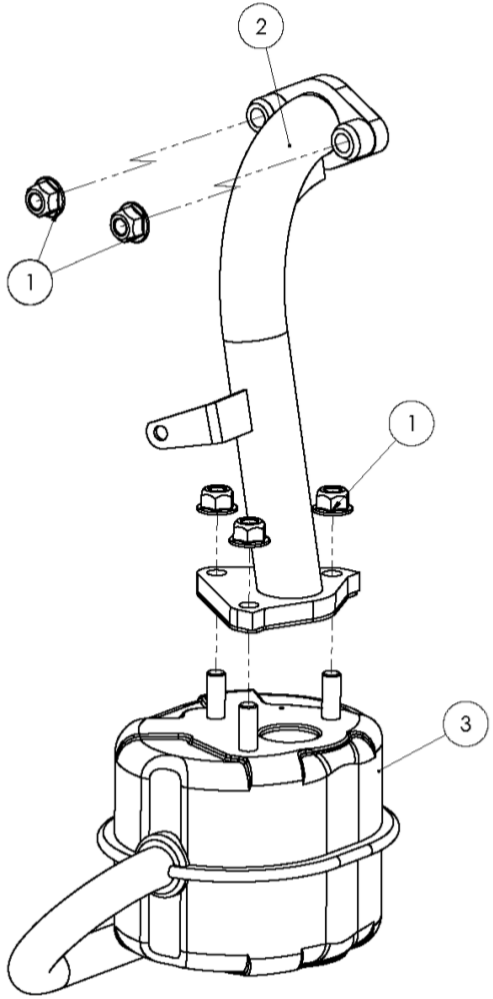
2
1
1
3

POS.	COD.	DESCRIZIONE	*DESCRIPTION*
1	AFN.00520	Dado m 8 autofrenante flangiato in rame	*M8 copper brake-block*
2	SZ0.02734	Collettore scarico centurionbi	*Exhaust manifold centbi*
3	FVN.03935	Silenziatore scarico centurionbi verniciato	Exhaust centbi

MONTAGGIO MOTORE - ENGINE MOUNTING

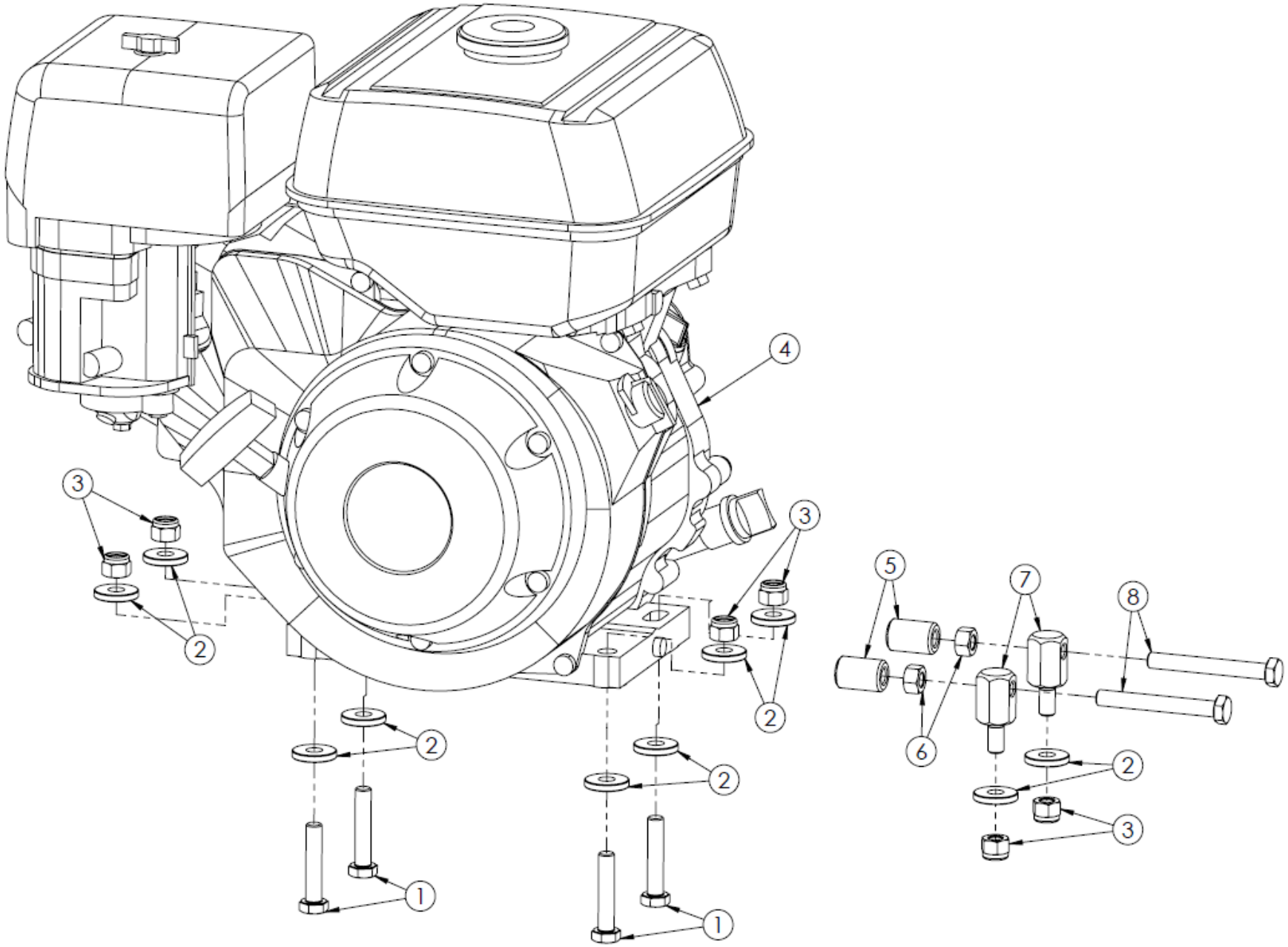

POS.	COD.	DESCRIZIONE	*DESCRIPTION*
1	AFN.00678	Vite m10x 50 esagonale 5739	*M10x 50 hexagonal head screw*
2	SZ0.02400	Rondella 10,5-28x4 motore-tend. cent	*Washer spacer 10,5-28x4,5 cent*
3	AFN.02393	Dado m10 autoblock alto	*Nut m10 high self-locking*
4	AFS.03627	Motore honda gx270 no tanica 12v/25w rdg4	*Honda engine gx270 w/o fuel tank*
5	FL1.03191	Puntale plastica tendimotore cent	*Plastic pivot for engine tightener cent*
6	AFN.00255	Dado m10	*Nut m10*
7	SZ0.03207	Perno fermamotore centbi	*Adj.pivot x engine centbi*
8	AFN.00674	Vite m10x 80 esagonale tutto filetto 5737	*M10x 80 hexagonal head screw*
9	Honda.005	Serbatoio motore honda gx270	*Honda gx270 engine tank*

TENDICATENA - CHAIN TIGHTENER

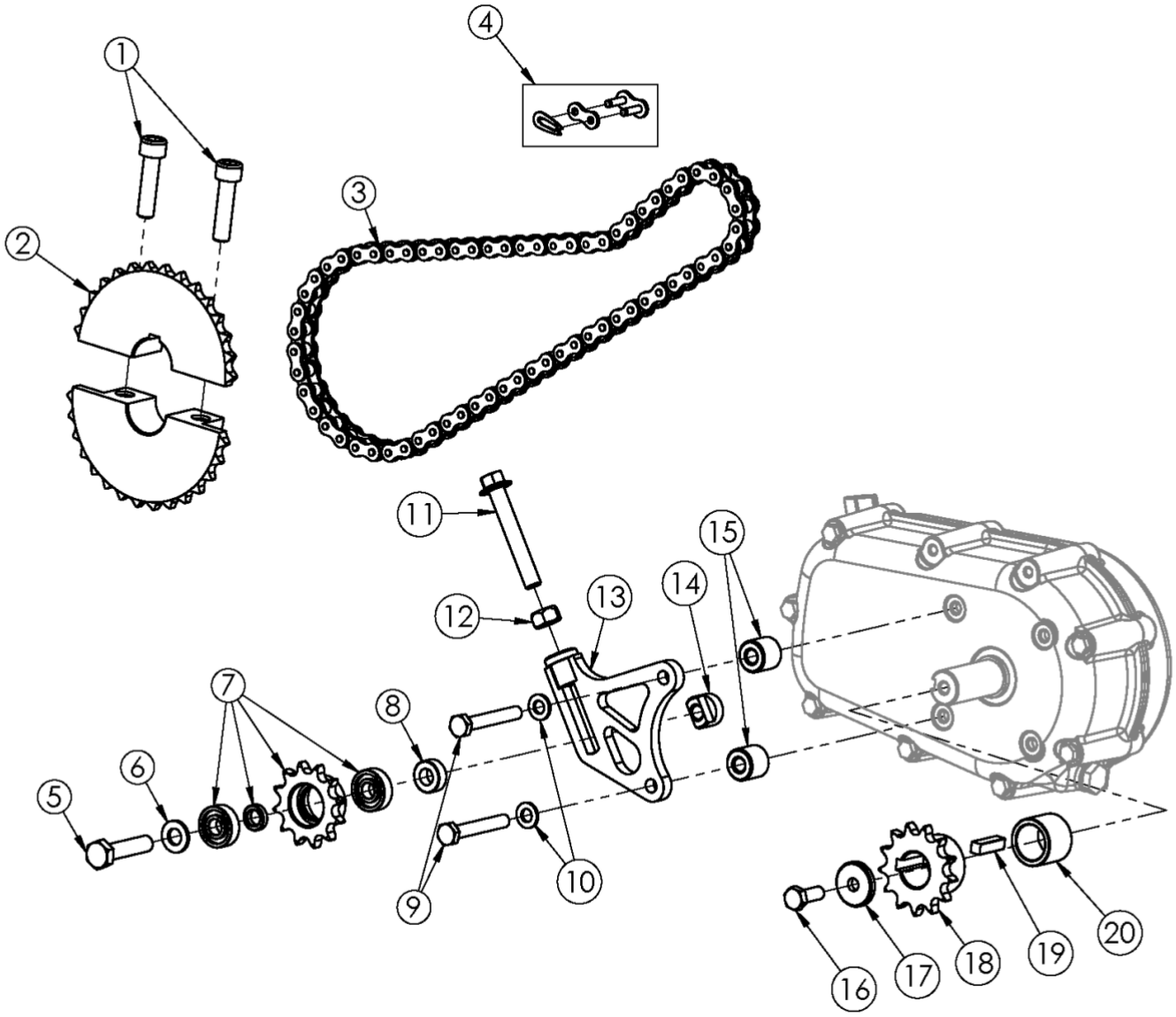

POS.	COD.	DESCRIZIONE	*DESCRIPTION*
1	AFN.00132	Vite m 8x 40 cilindrica 5931	*M8x40 socket head screw*
2	FM0.04407	Corona z26 d30 cent crg con viti comp.	*#VALORE!*
3	AMS.00671	Catena al metro kz standard	*Kz chain per meter std*
4	AMS.00779	Maglia congiunzione catena kz	*Joining link for chain kz*
5	TES.10X045	Vite m10x 45 esagonale	*M10x 45 hexagonal head screw*
6	AFN.01637	Rondella 10,5-20x2	*Washer 10,5-20x2*
7	FM0.01293	Pignone tendicatena z12 cent cusc.ø12 comp	*Chain tightener sprocket 12t assy cent*
8	SZ0.04016	Spessore 12-20x11,3 tendicatena cent	*Chain tightener washer 10x20x11,3*
9	AFN.00349	Vite m 8x 35 esagonale 5739	*M 8x35 hexagonal head screw*
10	AFN.00108	Rondella 8,5-18x2	*Washer 8,5-18x2*
11	AFN.02149	Vite m10x 70 esagonale 5739	*M10x 70 hexagonal head screw*
12	AFN.00255	Dado m10	*Nut m10*
13	SZ0.02691	Piastra tendicatena centurionbi	*Tightener plate centbi*
14	SZ0.02720	Dado perno tendicatena centurionbi	*Tightener pivot nut centbi*
15	SZ0.02721	Bussola tendicatena centurionbi	*Tightener bushing centbi*
16	AFN.00307	Vite m 8x 30 esagonale 5739	*M 8x30 hexagonal head screw*
17	SZ0.02365	Rondella pignone x gx270 centurion	*Sprocket washer for gx270 centurion*
18	SZ0.00668	Pignone motore z13 centurion	*Engine gear 13t cent*
19	SL1.02550	Chiavetta 7x7x33 centurion	*Key 7x7x33 cent*
20	SZ0.01292	Spessore pignone honda 270 cent	*Gear spacer honda 270 cent*

CARENA DESTRA - RIGHT SIDE FAIRING

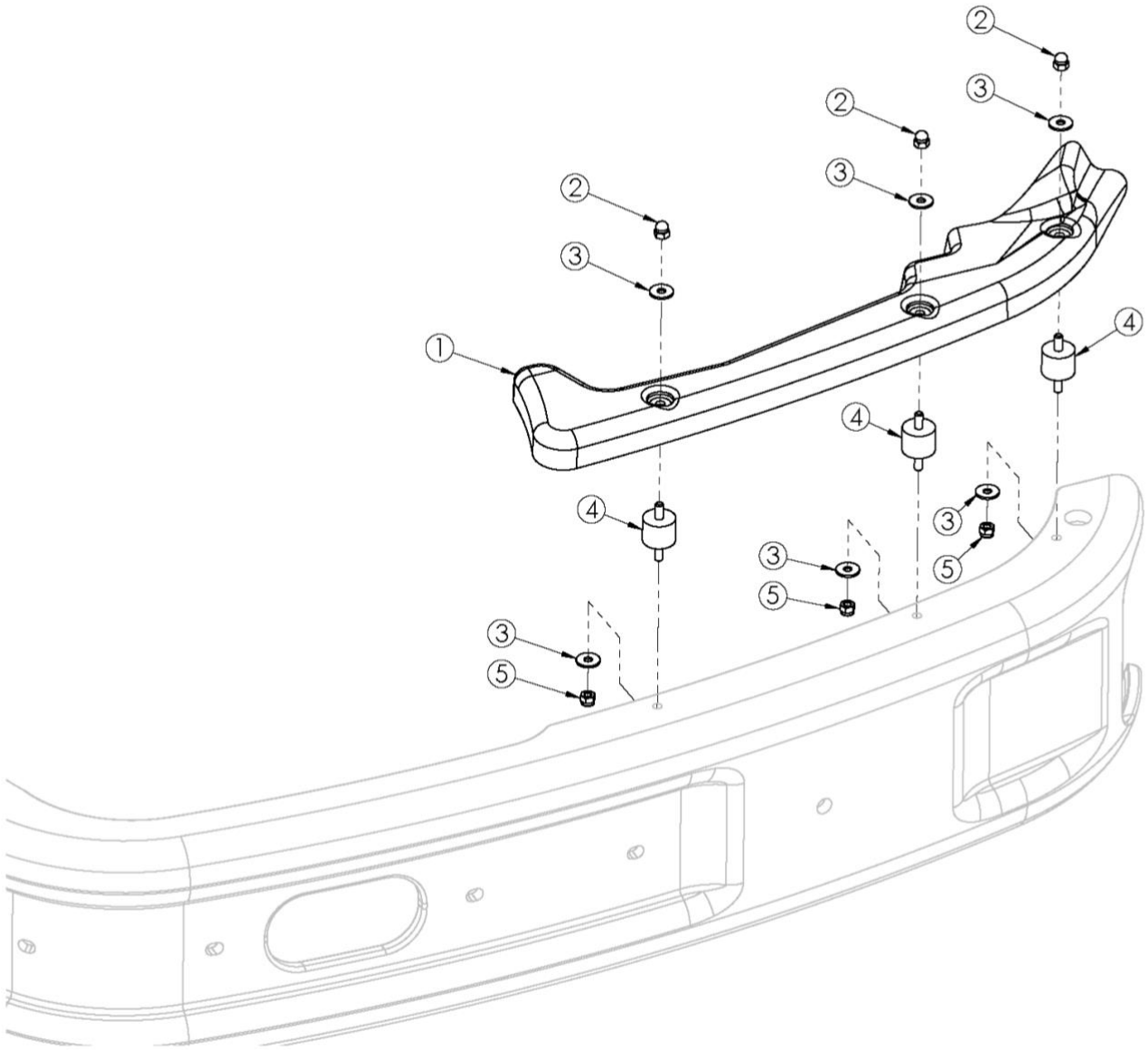

POS.	COD.	DESCRIZIONE	*DESCRIPTION*
1	AFS.4841D	Carena laterale centurion 2019 dx	*Side fairing rh cent*
2	SBN.02376	Dado m 6 cieco zincato cent	*Blind nut m 6 black cent*
3	AFN.00263	Rondella 6,5-18x1,6	*Washer 6,5-18x1,6*
4	AFS.02296	Silentblock m+m m 6 ø25x20 centurion	*Silentblock m+m m 6 25x20 cent*
5	AFN.00264	Dado m 6 autoblock alto	*Nut m6 high self-locking*

CARENA SINISTRA - LEFT SIDE FAIRING

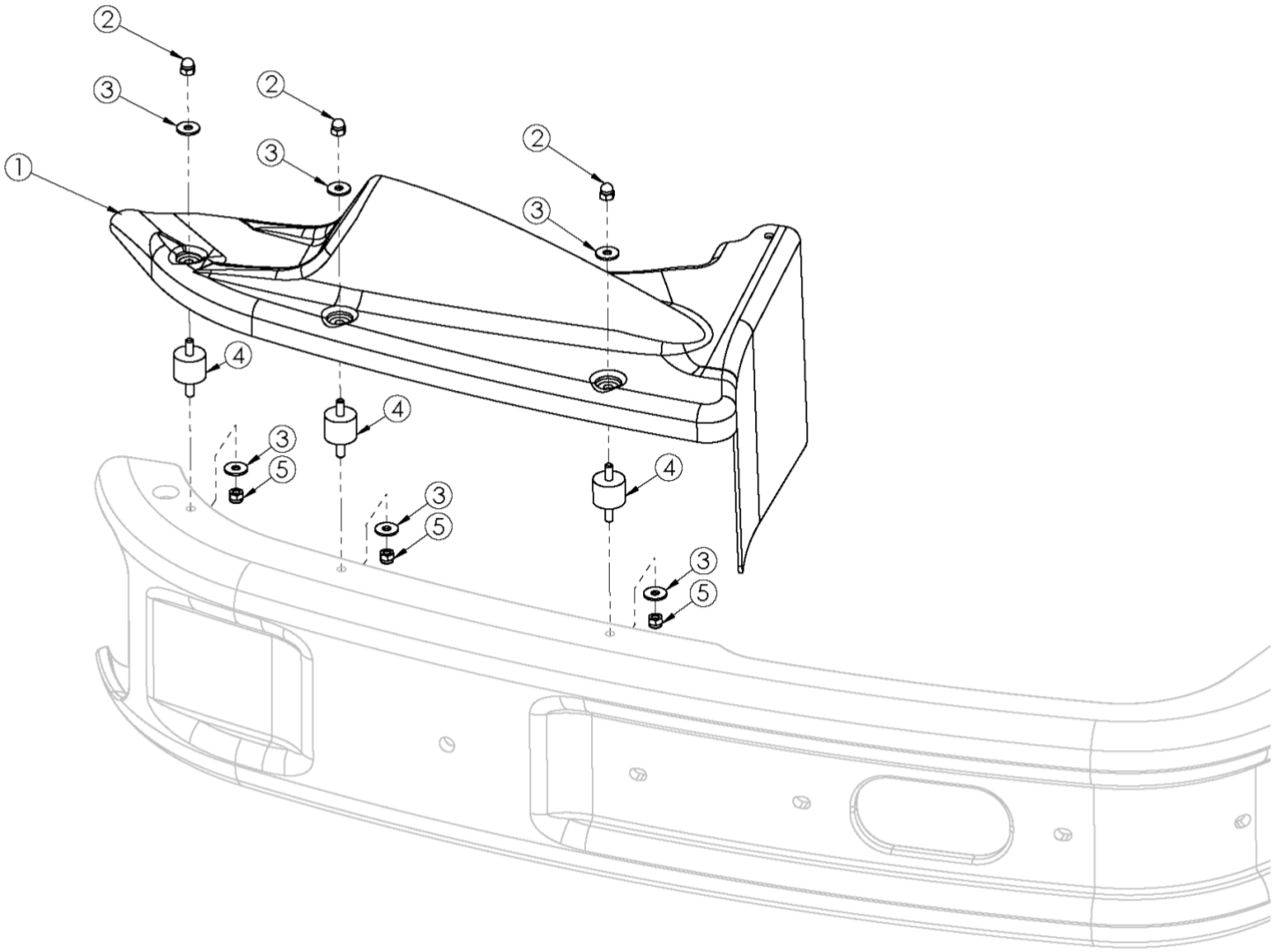

POS.	COD.	DESCRIZIONE	*DESCRIPTION*
1	AFS.4841S	Carena laterale centurion 2019 sx	*Side fairing lh cent*
2	SBN.02376	Dado m 6 cieco zincato cent	*Blind nut m 6 black cent*
3	AFN.00263	Rondella 6,5-18x1,6	*Washer 6,5-18x1,6*
4	AFS.02296	Silentblock m+m m 6 ø25x20 centurion	*Silentblock m+m m 6 25x20 cent*
5	AFN.00264	Dado m 6 autoblock alto	*Nut m6 high self-locking*

CARENA POSTERIORE - REAR FENDER

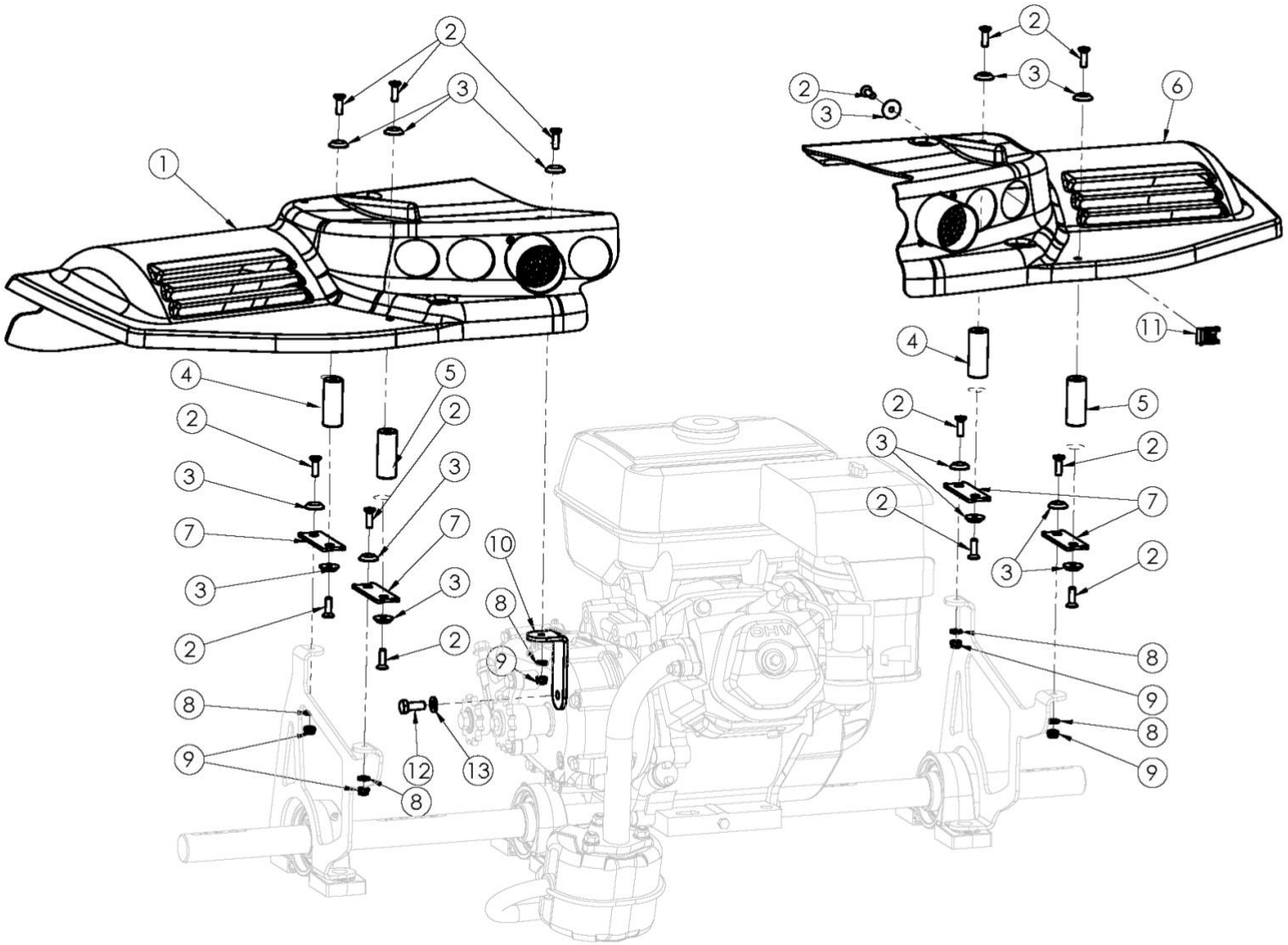

POS.	COD.	DESCRIZIONE	*DESCRIPTION*
1	SL1.2170S	Carena posteriore sx centbi	*Rear fender lf centbi*
2	AFN.00261	Vite m 6x 20 svasata 5933	*M6x20 countersunk head screw*
3	SAN.00249	Rondella 6 svasata nera	*Washer 6 countersunk black*
4	SZ0.04903	Piastra distanziale carena post.biposto 70mm	*#VALORE!*
5	SZ0.04902	Piastra distanziale carena post.biposto 53mm	*#VALORE!*
6	SL1.2170D	Carena posteriore dx centbi	*Rear fender rh centbi*
7	SZ0.02511	Piastra silentblock spoiler dx/sx cent	*Spoiler rh/lf silentblock plate cent*
8	AFN.00263	Rondella 6,5-18x1,6	*Washer 6,5-18x1,6*
9	AFN.00106	Dado m 6 autoblock basso	*Nut m6 low self-locking*
10	SZ0.02985	Supporto carena posteriore centbi	*Rear fender support centbi*
11	AFS.02327	Clips prestola m6 centurion	*Centurion clips m6 for fitting*

FRONTALINO - FRONT FAIRING

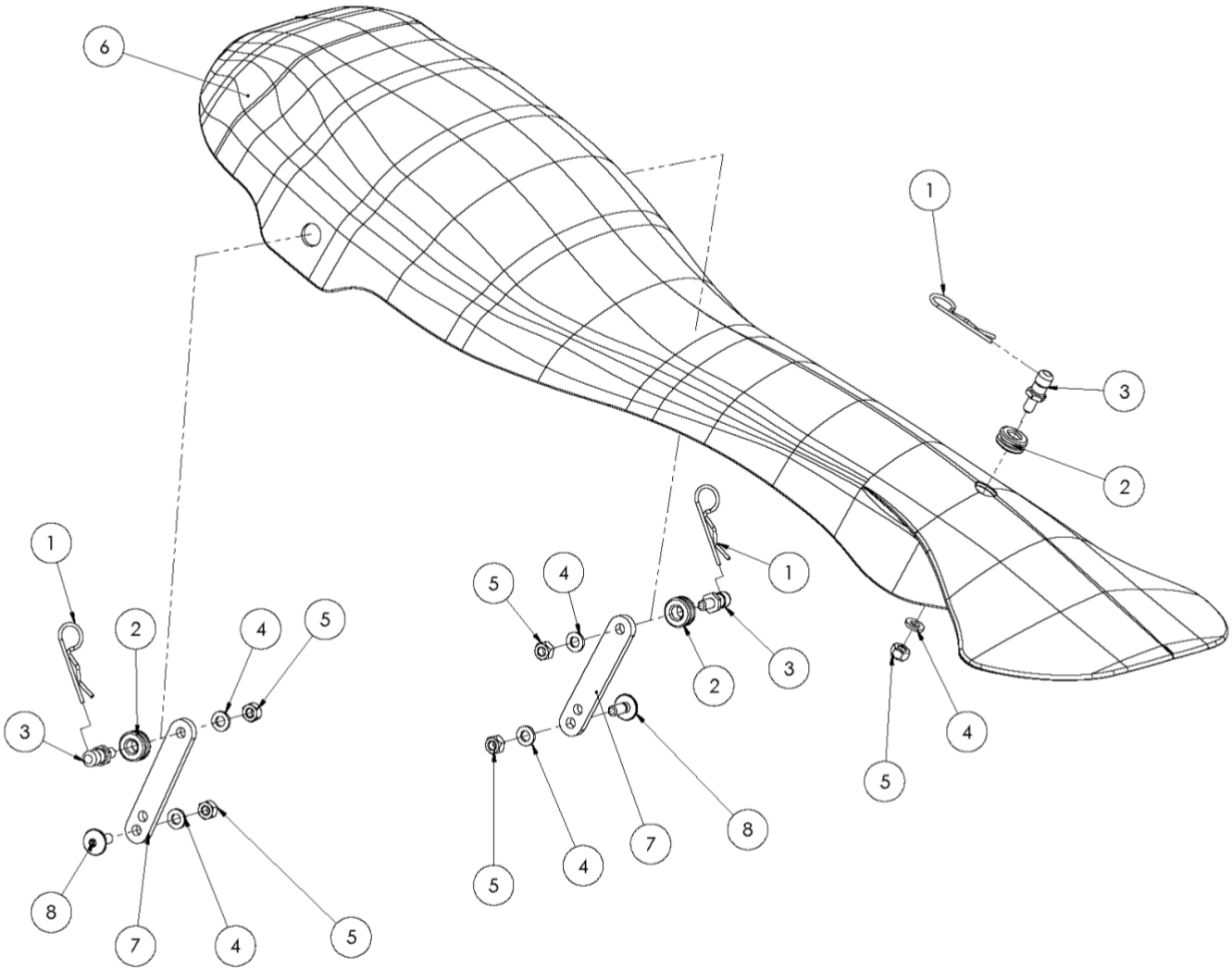

POS.	COD.	DESCRIZIONE	*DESCRIPTION*
1	SZ0.00102	Spina elastica supporto frontalino	*Front fairing elastic pin*
2	AFS.04522	Gommino supporto frontalino kg	*Front fairing rubber kg*
3	SBN.00103	Perno supporto frontalino inferiore	*Front fairing support pivot black*
4	AFN.00105	Rondella 6,5-12x1,5	*Washer 6,5-12x1,5*
5	AFN.00264	Dado m 6 autoblock alto	*Nut m6 high self-locking*
6	AFS.04226	Frontalino na3 cik-fia nero	*Na3 cik-fia front fairing black*
7	FZ0.01220	Piastrina prolunga frontalino centbi	*Front fairing extension plate*
8	AFS.00261	Vite testa tonda larga m 6x 16 pianale	*Floor tray screw large round head m6x16*

RUOTA POSTERIORE - REAR WHEEL

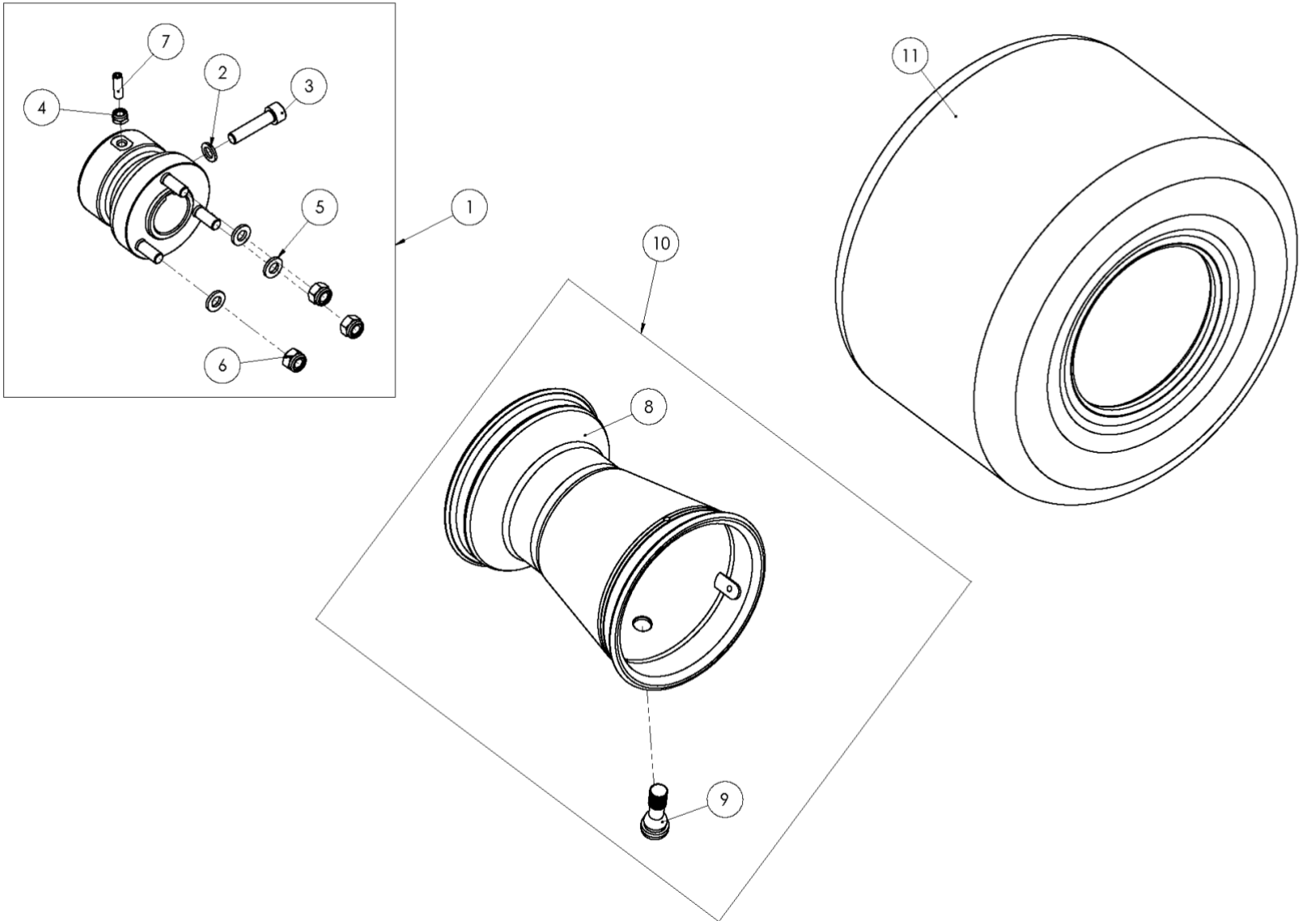

POS.	COD.	DESCRIZIONE	*DESCRIPTION*
1	FM0.01845	Mozzo posteriore 30x 60 centurion	*Rear hub 30x 60 complete*
2	AFN.00287	Rondella 8,5-14x1,5	*Washer 8,5-14x1,5*
3	AFN.02153	Vite m 8x 35 cilindrica 5931	*M 8x35 socket head screw*
4	AFN.00106	Dado m 6 autoblock basso	*Nut m6 low self-locking*
5	AFN.00108	Rondella 8,5-18x2	*Washer 8,5-18x2*
6	AFN.00128	Dado m 8 autoblock alto	*Nut m8 high self-locking*
7	AFN.02639	Grano m 6x20 testa piana	*M6x20 grub screw*
8	FVO.00293	Cerchio al h180 post no fori viti nero opaco	*Rim to h180 post no screw holes matt black*
9	AFS.02649	Valvola tubless corta	*Tubless valve short*
10	FM0.00293	Cerchio al h180 post no viti puffo/cent nero comp.	*Alu rear rim h180 no screws black complete*
11	*XXX.XXXX*	*Pneumatico 11x6.00-5*	*Tyre 11x6.00-5*

RUOTA ANTERIORE - FRONT WHEEL

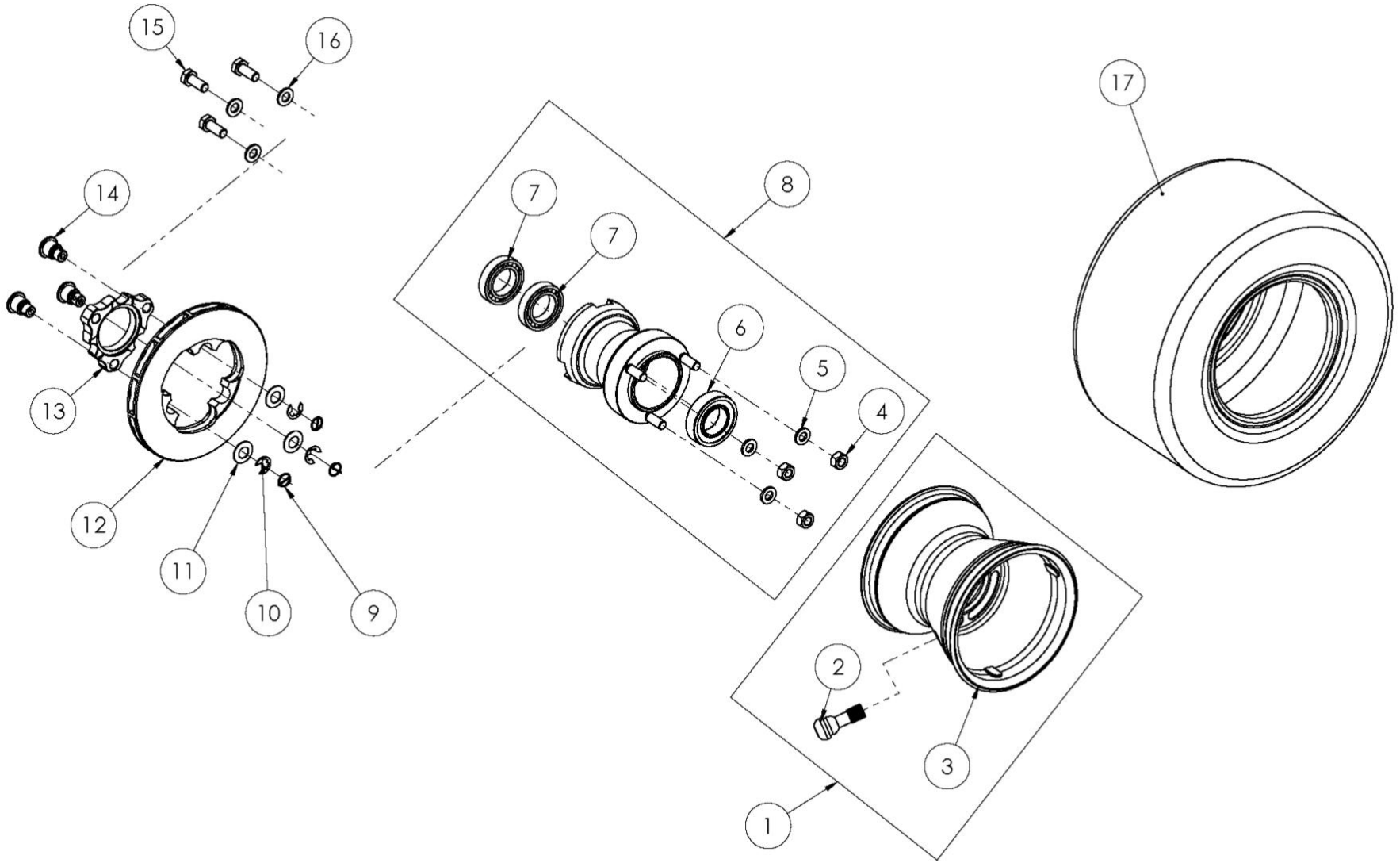

POS.	COD.	DESCRIZIONE	*DESCRIPTION*
1	FM0.03794	Cerchio al h132 ant no viti cent comp.	*Alu front wheel h132 n/screws assy cent*
2	AFS.02649	Valvola tubless corta	*Tubless valve short*
3	FVO.03794	Cerchio al h132 ant no fori viti cent nero opaco	*Al h132 rim no holes black matte*
4	AFN.00128	Dado m 8 autoblock alto	*Nut m8 high self-locking*
5	AFN.00108	Rondella 8,5-18x2	*Washer 8,5-18x2*
6	AFN.00685	Cuscinetto 6005 zz mozzo ant.nol	*Bearing rental front wheel hub*
7	AFN.01750	Cuscinetto 61905 zz mozzo ant. d25	*Bearing front hub ø25*
8	FM0.02949	Mozzo anteriore per disco freno cent compl.	*Front wheel hub centurion*
9	AFS.00232	Spina elastica d10 disco freno	*Elastic pin ø10 brake disc*
10	AFN.00231	Seeger d 8 disco freno	*Seeger d8 brake disc*
11	AFN.01677	Rondella disco freno elastica post ø10-23	*V09/v10 brake disc elastic washer*
12	SL1.01731	Rett>disco freno anteriore autoventilato cent	*#VALORE!*
13	SZ0.02140	Flangia disco autoventilato cent	*Pulley flange cent*
14	SBN.00372	Bussola disco freno anteriore v09-v11	*Front brake disc bush*
15	AFN.00316	Vite m 8x 22 esagonale 5739	*M 8x22 hexagonal head screw*
16	AFN.00129	Rondella 8,5-17x1,5	*Washer 8,5-17x1,5*
11	*XXX.XXXX*	*Pneumatico anteriore Centurion Biposto*	*Front tyre Centurion two seats*

OPTIONAL ROLL BAR - OPTIONAL ROLL BAR

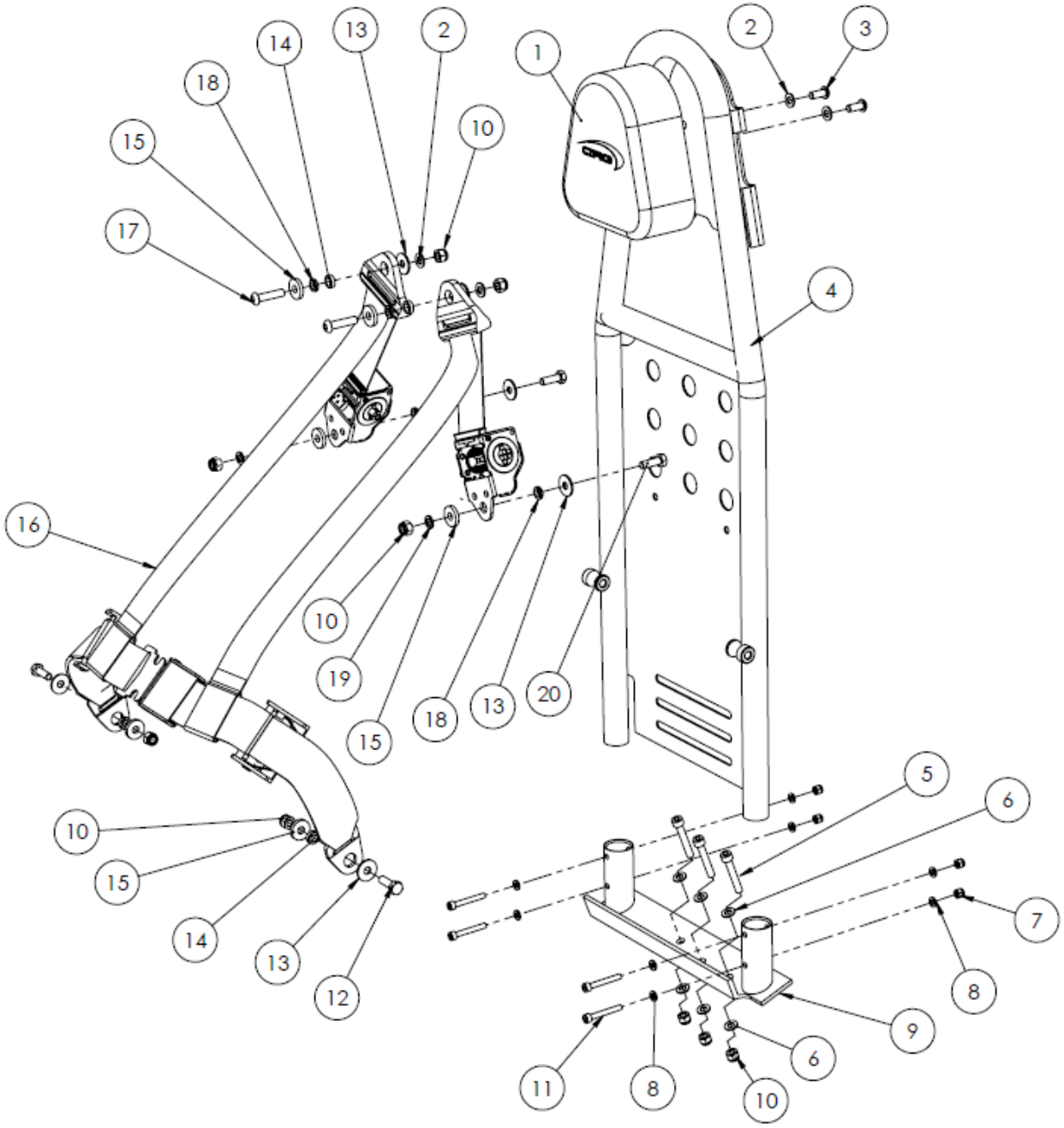

POS.	COD.	DESCRIZIONE	*DESCRIPTION*
1	AFS.05760	Poggiatesta crg rent tondo stampato	*Padded headrest crg rent*
2	AFN.00350	Rondella 8,5-16x1,5	*Washer 8,5-16x1,5*
3	AFN.00379	Vite m 8x 20 bombata 7380	*M 8x20 convex head screw*
4	FC0.03231	Rollbar centbi cromato	*Chromed centbi rollbar*
5	AFN.00681	Vite m 8x 50 cilindrica 5931	*M8x50 hex socket screw*
6	AFN.00129	Rondella 8,5-17x1,5	*Washer 8,5-17x1,5*
7	AFN.00264	Dado m 6 autoblock alto	*Nut m6 high self-locking*
8	AFN.00105	Rondella 6,5-12x1,5	*Washer 6,5-12x1,5*
9	FZ0.03243	Supporto rollbar centbi	*Centbi rollbar support*
10	AFN.00128	Dado m 8 autoblock alto	*Nut m8 high self-locking*
11	AFN.02035	Vite m 6x 45 cilindrica 5931	*M6x45 socket head screw*
12	AFN.00107	Vite m 8x 25 esagonale 5739	*M 8x25 hexagonal head screw*
13	AFN.02415	Rondella 8,5-24x2	*8,5-24x2 washer*
14	FBN.00252	Spessore 8,5-14x 5 barretta	*Rod spacer 8,5-14x5 track rod*
15	AFN.00277	Rondella 8,4-23x4	*Washer 8,4-23x4*
16	AFS.0534302	Cintura sicurezza 4 punti rental velm	*Seat belt 4 points*
17	AFN.00476	Vite m 8x 35 bombata 7380	*M 8x 35 convex head screw*
18	SZ0.05395	Spessore 8x14x3,2 x cinture velm	*Spacer 8x14x3,2 for belts with reel*
19	AFN.00287	Rondella 8,5-14x1,5	*Washer 8,5-14x1,5*
20	AFN.00107	Vite m 8x 25 esagonale 5739	*M 8x25 hexagonal head screw*


1
CRG

POS.	COD.	DESCRIZIONE	*DESCRIPTION*
1	AFS.04477	Kit adesivi centurion 2018 compl.	*Centurion stickers kit complete*
2	AFS.03366GIALLO	Kit adesivi centurion 2017 compl. giallo	*Centurion yellow stickers kit complete*
3	AFS.03366BLU	Kit adesivi centurion 2017 compl. blu	*Centurion blue stickers kit complete*

TUTA KART- RACING SUIT/ CASCO - HELMET



POS.	COD.	DESCRIZIONE	*DESCRIPTION*
1	XXX.XXXX	Tuta kart CRG-Sparco	*CRG-Sparco racing suit*
2	XXX.XXXX	Casco integrale con visiera	*Full face helmet with visor*
3	XXX.XXXX	Casco aperto	*Open helmet*

Centurion BIPOSTO

C.R.G. S.r.l. Via Mantova 4F - 25017 Lonato del Garda (BS) Tel. +39.030.9912604 Fax +39.030.9130714