
CRG
Catalogo
Catalogue
2026
Road Rebel Rotax
Rel 001

Road Rebel Rotax

INGOMBRI MASSIMI – OVERALL DIMENSIONS





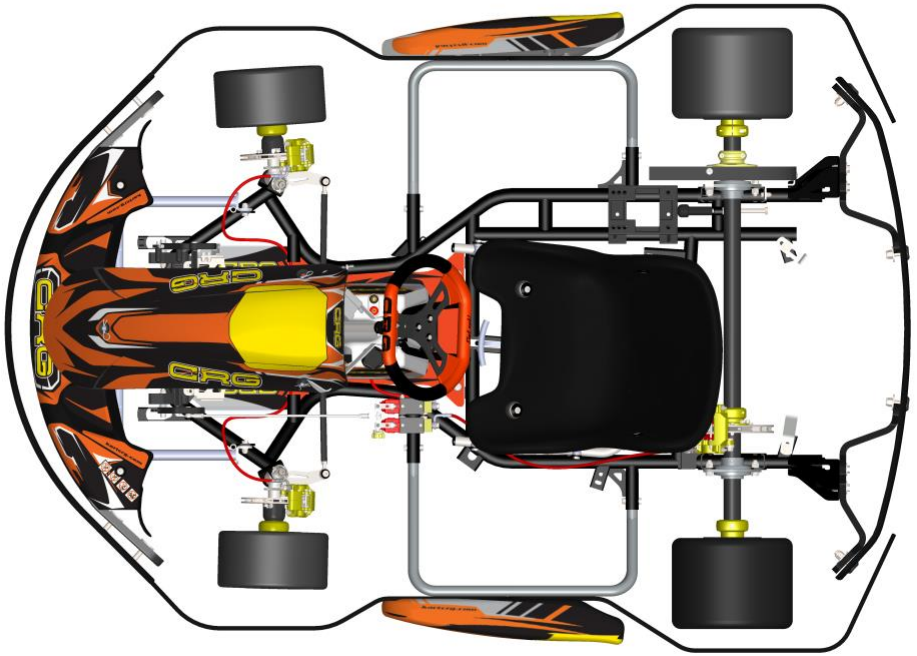

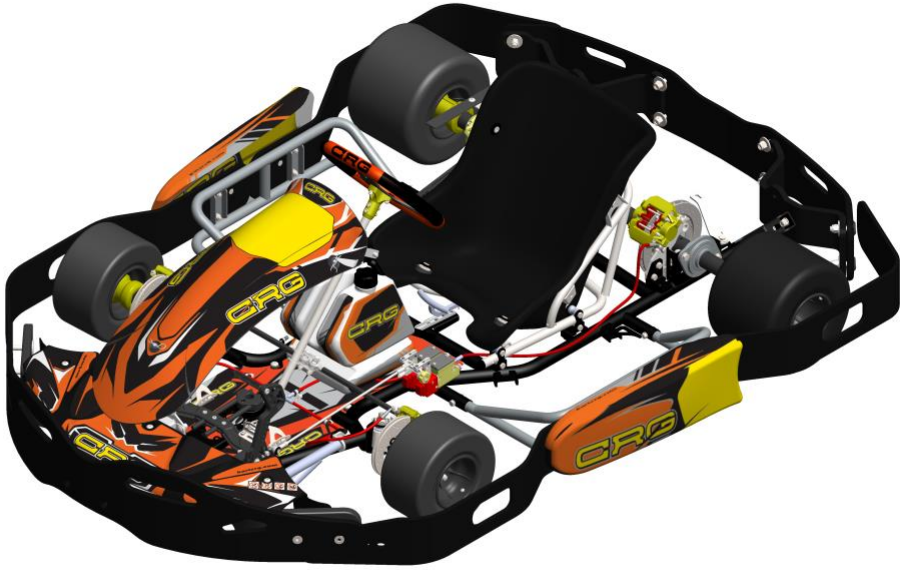

INDICE - INDEX

SCOCCA – FRAME 5
VOLANTE – STEERING WHEEL 7
TIRANTI E PIANTONE STERZO – TRACK ROD AND STEERING COLUMN 9
CASTER E FUSELLI – CASTER AND STUB AXLES 11
PEDALIERA COMPLETA – FOOTREST ASSEMBLY 13
ASSALE – REAR AXLE 15
DISCO FRENO E MOZZO – BRAKE DISC AND HUB 17
IMPIANTO FRENANTE – BRAKE SYSTEM 19
POMPA FRENO – MASTER CYLINDER 21
PINZA FRENO ANTERIORE – FRONT BRAKE CALIPER 23
PINZA FRENO POSTERIORE – REAR BRAKE CALIPER 25
SUPPORTO MOTORE E AFFINI – ENGINE MOUNT AND RELATED COMPONENTS 27
TANICA SERBATOIO 8.5 LT – FUEL TANK 8.5 LT 29
SEDILE REGOLABILE – ADJUSTABLE SEAT 31
PARAURTI E PROTEZIONE ANTERIORI – FRONT BUMPER AND FRONT BUFFER 33
PARAURTI E PROTEZIONE LATERALI – SIDE BUMPER AND SIDE BUFFER 35
PARAURTI E PROTEZIONE POSTERIORI – REAR BUMPER AND REAR BUFFER 37
FRONTALINO E SPOILER ANTERIORE – FRONT FAIRING AND FRONT SPOILER 39
CARENE LATERALI E PIANALE – SIDE FAIRINGS AND FLOOR TRAY 41
MOZZI RUOTA E CERCHI – WHEEL HUBS AND RIMS 43
TUTA KART E CASCO – RACING SUIT AND HELMET 46
OPTIONAL RIDUZIONE SEDILE IN GOMMA – OPTIONAL RUBBER SEAT REDUCTION 45

SCOCCA – FRAME

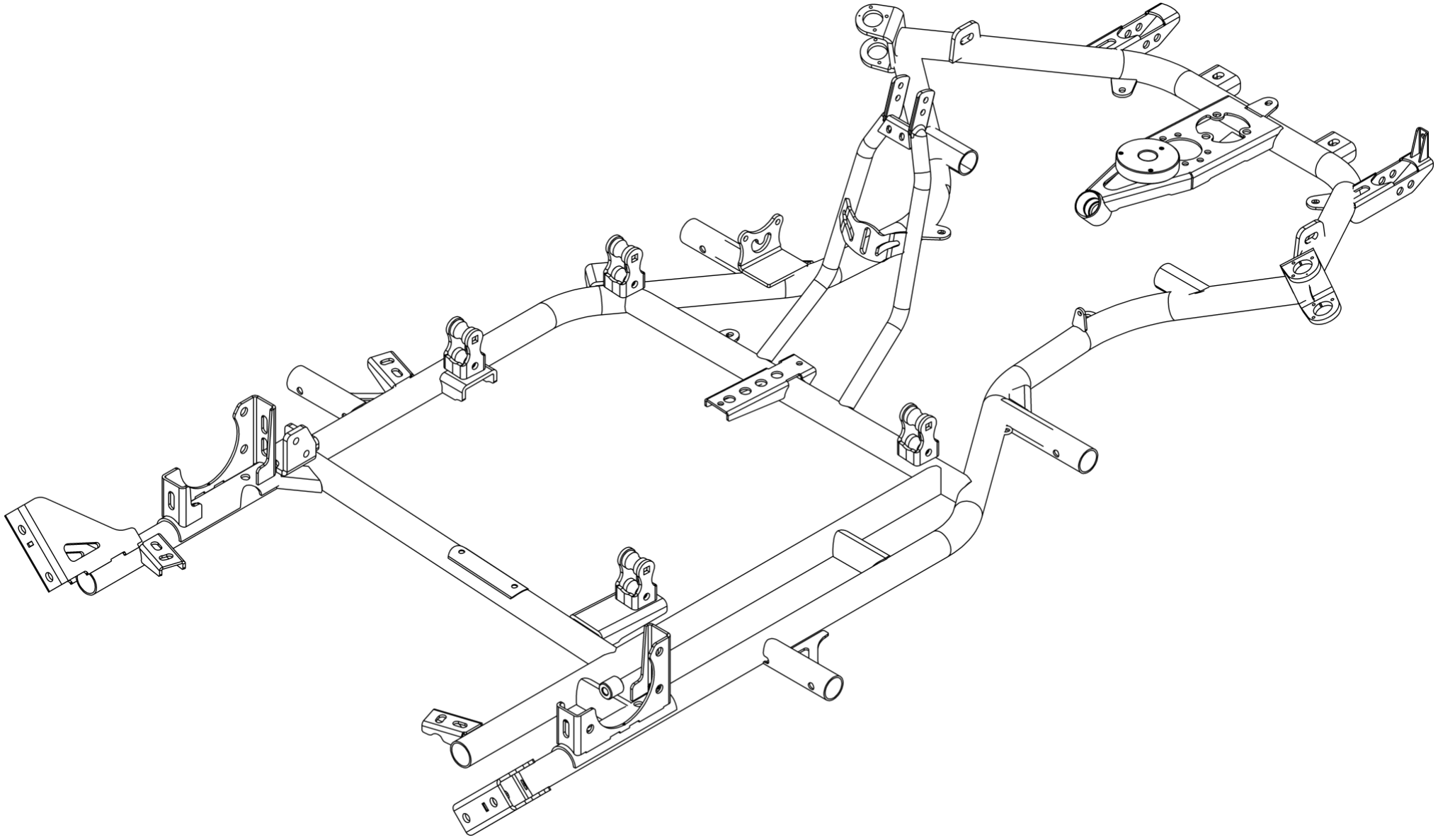

POS.	COD.	DESCRIZIONE	*DESCRIPTION*
1	FVO.07160	SCOCCA ROADREBEL ROTAX NERO OPACO	*ROAD REBEL ROTAX BLACK MATTE FRAME*

VOLANTE – STEERING WHEEL

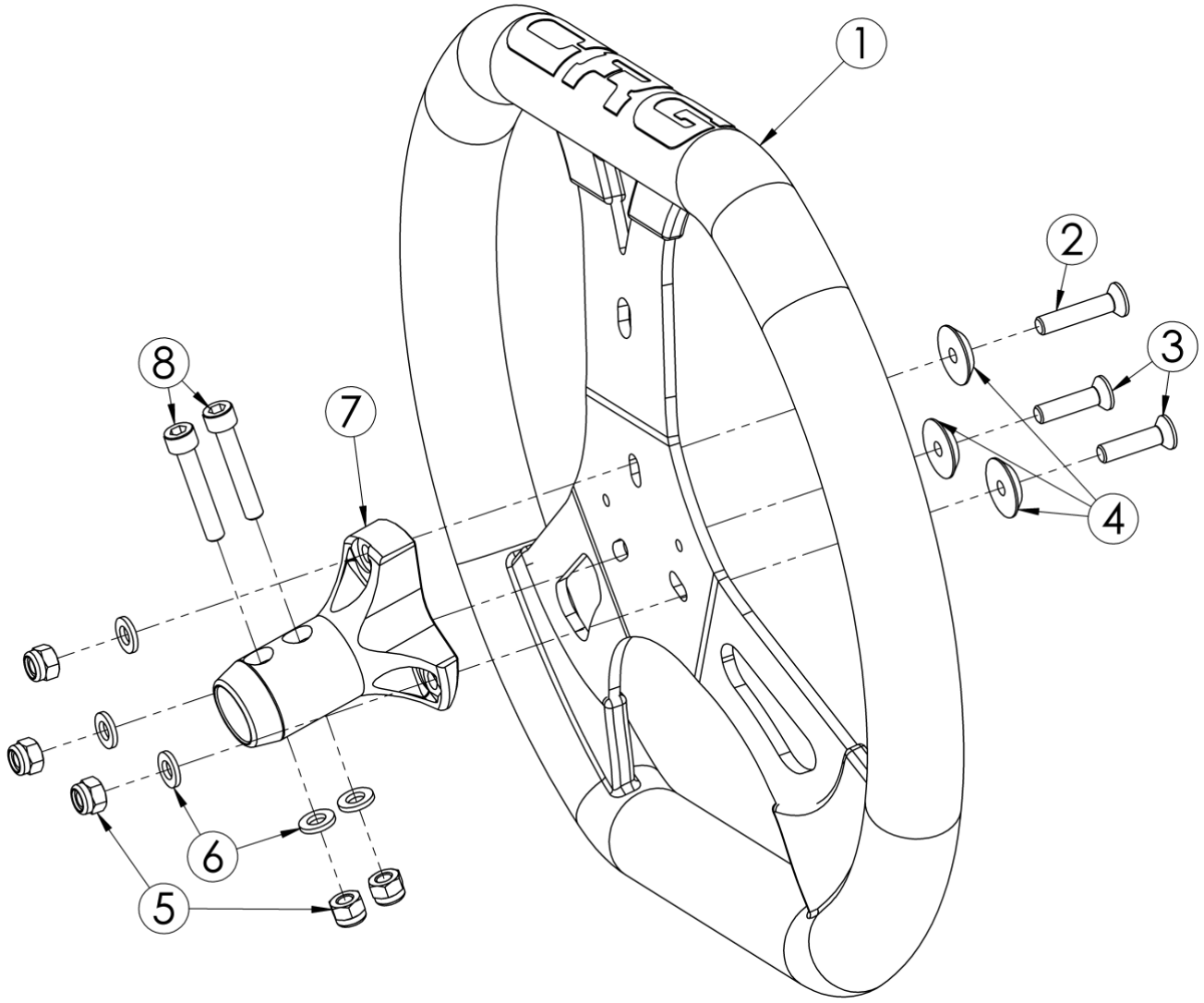

POS.	COD.	DESCRIZIONE	*DESCRIPTION*
1	AFS.06462	VOLANTE FLAT OUT CRG 340 R3.0 BLACK/ORANGE	STEERING WHEEL 340 BLACK/ORANGE VS.3.0
2	AFN.00499	VITE M 6X 30 SVASATA 5933	*M 6X30 CONTERSUNK HEAD SCREW*
3	AFN.00295	VITE M 6X 25 SVASATA 5933	*M6X25 COUNTERSUNK HEAD SCREW*
4	SAN.00249	RONDELLA 6 SVASATA NERA	*WASHER 6 COUNTERSUNK BLACK*
5	AFN.00264	DADO M 6 AUTOBLOCK ALTO	*NUT M6 HIGH SELF-LOCKING*
6	AFN.00105	RONDELLA 6,5-12X1,5	*WASHER 6,5-12X1,5*
7	FAG.01626	MOZZO VOLANTE INCLINATO ORO	*STEERING WHEEL HUB INCLINED GOLD*
8	AFN.00137	VITE M 6X 35 CILINDRICA 5931	*M 6X35 SOCKET HEAD SCREW*

TIRANTI E PIANTONE STERZO – TRACK ROD AND STEERING COLUMN

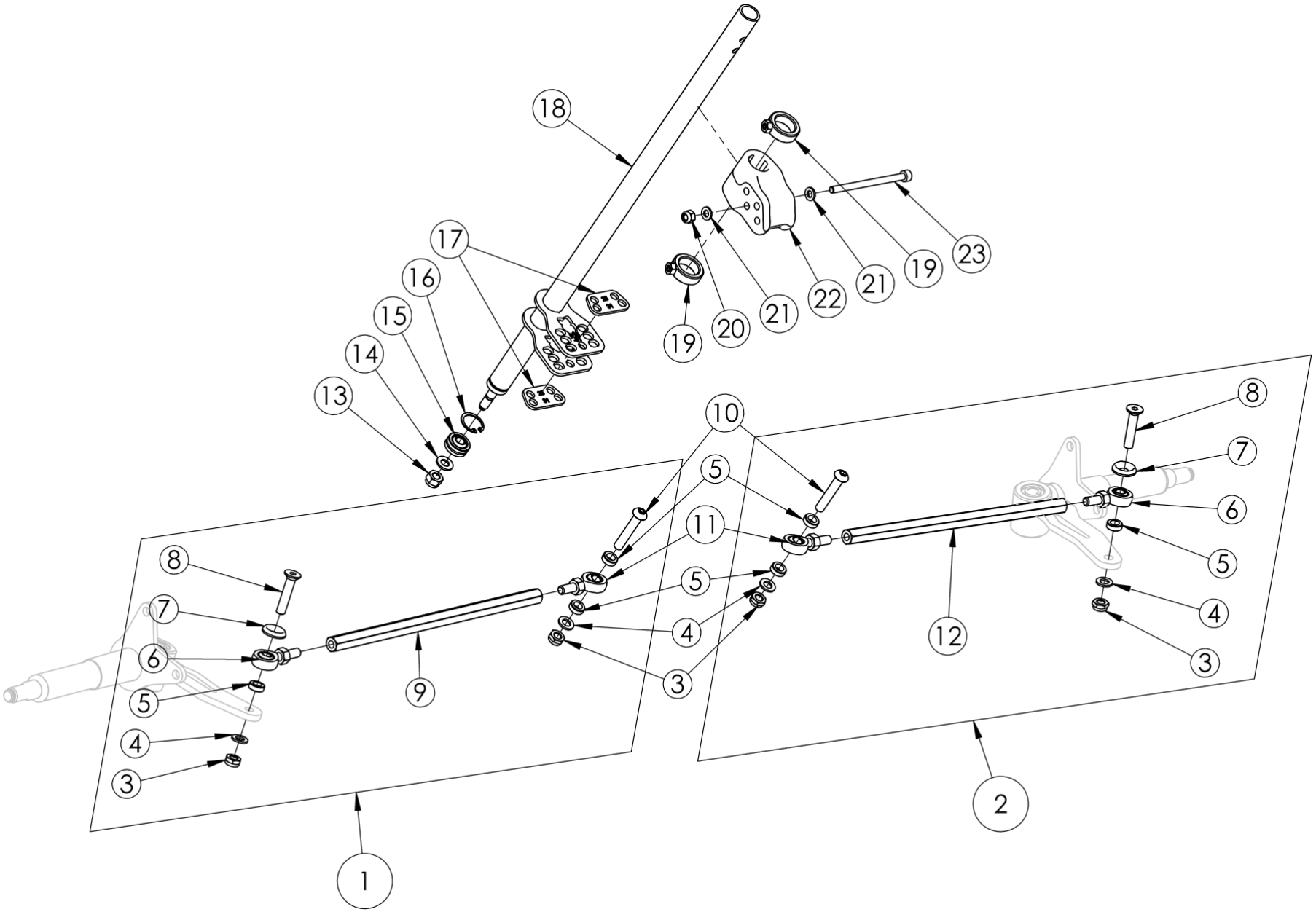

POS.	COD.	DESCRIZIONE	*DESCRIPTION*
1	FK0.00815	BARRETTA ESA CRG COMPLETA 26,5	HEXAGONAL TRACK ROD CRG COMPLETE 26,5
2	FK0.00822	BARRETTA ESA CRG COMPLETA 26	*HEXAGONAL TRACK ROD CRG COMPLETE 26*
3	AFN.00160	DADO M 8 AUTOBLOCK BASSO	*NUT M8 LOW SELF-LOCKING*
4	AFN.00287	RONDELLA 8,5-14X1,5	*WASHER 8,5-14X1,5*
5	FBN.00252	SPESSORE 8,5-14X 5 BARRETTA	*ROD SPACER 8,5-14X5 TRACK ROD*
6	AFS.0047D	UNIBALL STERZO DX C/DADO	*BALL JOINT RH WITH NUT*
7	SAN.00146	RONDELLA 8 SVASATA NERA	*WASHER 8 COUNTERSUNK BLACK*
8	AFN.00483	VITE M 8X 40 SVASATA 5933	*M 8X 40 COUNTERSUNK HEAD SCREW*
9	FAN.00822	BARRETTA ESA CM.26 NERA	*HEXAGONAL TRACK ROD CM.26*
10	AFN.02098	VITE M 8X 45 BOMBATA 7380	*M 8X45 CONVEX HEAD SCREW*
11	AFS.0047S	UNIBALL STERZO SX C/DADO	*BALL JOINT LEFT WITH NUT*
12	FAN.00815	BARRETTA ESA CM.26,5 NERA	*HEXAGONAL TRACK ROD CM.26,5*
13	AFN.00128	DADO M 8 AUTOBLOCK ALTO	*NUT M8 HIGH SELF-LOCKING*
14	AFN.00350	RONDELLA 8,5-16X1,5	*WASHER 8,5-16X1,5*
15	AFN.00153	UNIBALL PIANTONE Ø 8	*STEERING COLUMN BEARING*
16	AFN.00154	SEEGER D22 PIANTONE/POMPA ACQUA	*SEEGER D22 STEERING COLUMN/WATER PUMP*
17	SC0.05292	FERMO PIANTONE STERZO R2.0 R25-31	*STEERING WHEEL COLUMN LOCK R 2.0 R25-31*
18	FC0.05293M	PIANTONE STERZO CRG R2.0 R25-31 M	*STEERING WHEEL COLUMN CRG R25-31 M*
19	FKN.00356	KIT BOCCOLA PIANTONE (2)	*STEERING COLUMN LOCK RING KIT*
20	AFN.00264	DADO M 6 AUTOBLOCK ALTO	*NUT M6 HIGH SELF-LOCKING*
21	AFN.00105	RONDELLA 6,5-12X1,5	*WASHER 6,5-12X1,5*
22	AFS.04812	SUPPORTO PIANTONE PLASTICA 4 FORI	*PLASTIC COLUMN SUPPORT 4 HOLES*
23	AFN.00404	VITE M 6X 90 CILINDRICA 5931	*M6X90 SOCKET HEAD SCREW*

CASTER E FUSELLI – CASTER AND STUB AXLES

Set Nr.31 comprende sia il caster di sinistra che di destra
Set No.31 includes both the left and right casters

Attenzione: le parti Nr. 14, 17 e 32 hanno la versione sinistra e destra
Attention: part No. 14, 17 and 32 have left and right version

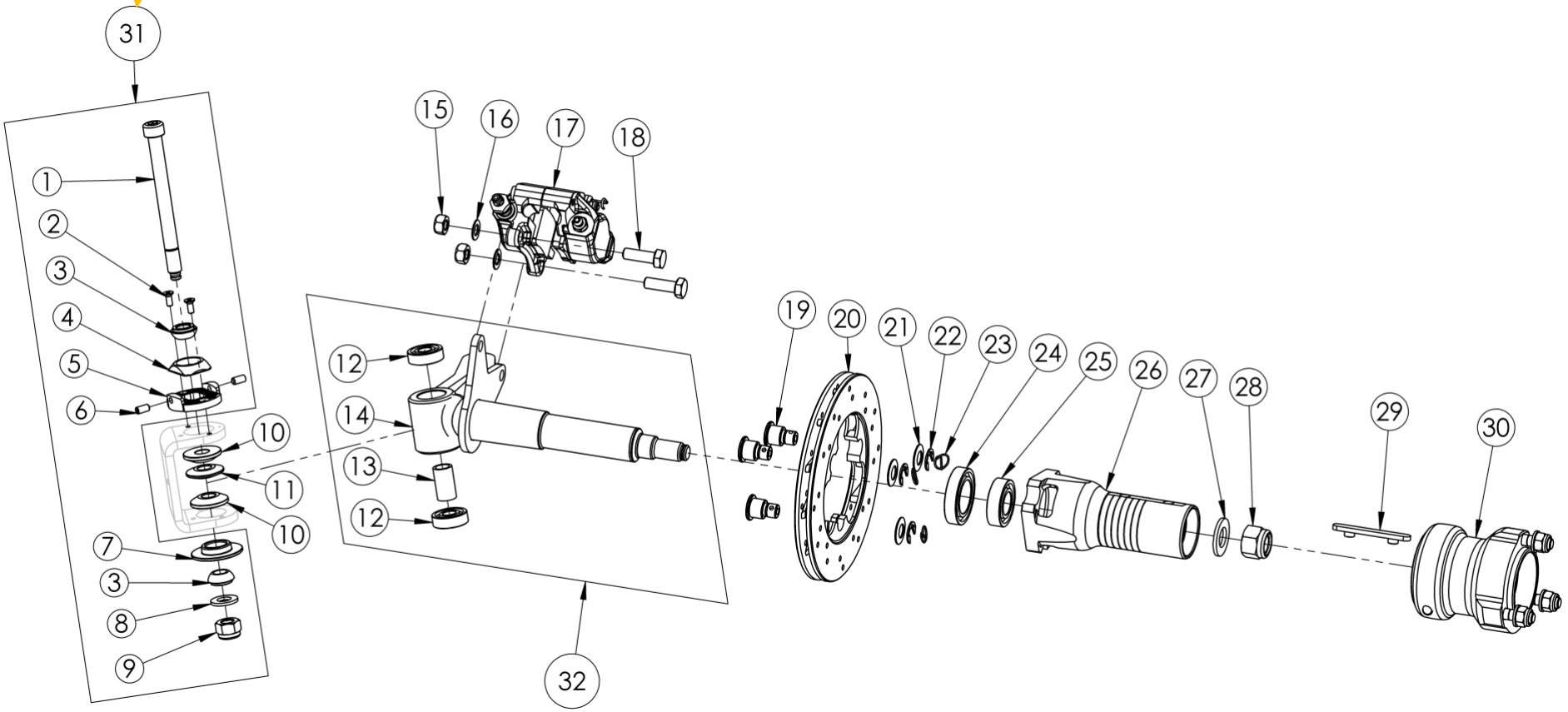

POS.	COD.	DESCRIZIONE	*DESCRIPTION*
1	AFS.04659	VITE FUSELLO 10X111 RETTIFICATA	STUB AXLE BOLT 10X111 RECTIFIED
2	AFN.02389	VITE M 4X 10 SVASATA 5933	*M 4X10 COUNTERSUNK HEAD SCREW*
3	FZ0.02450	BOCCOLA MEZZA SFERA CASTER FORO Ø10	*BUSHING HALF CASTER Ø10*
4	AFS.02353	CASTER PIASTRINA ALTA B	*CASTER HIGH PLATE B*
5	AFS.02352	CASTER PORTA PIASTRINA A	*CASTER SUPPORT A*
6	AFN.02390	GRANO M 5X10 CASTER DOPPIO	*GRUB SCREW M 5X10 DOUBLE CASTER*
7	FZ0.01602	CASTER FISSO STD	*FIXED CASTER STD*
8	AFN.01637	RONDELLA 10,5-20X2	*WASHER 10,5-20X2*
9	AFN.02393	DADO M10 AUTOBLOCK ALTO	*NUT M10 HIGH SELF-LOCKING*
10	FZ0.01607	SPESSORE 10 -28X 6 FUSELLO PIANO	*STUB AXLE SPACE 10-28X6 PLAIN*
11	FZ0.01719	SPESSORE 10 -28X 6 FUSELLO CONICO	*STUB AXLE SPACER 10 -28X 6 CONICAL*
12	AFN.00959	CUSCINETTO 6000 ZZ FUSELLO D10	*BEARING STUB AXLE BOLT Ø10*
13	SBN.01605	SPESSORE 10X24 INTERNO FUSELLO	*STUB AXLE INTERNAL SPACER 10X24*
14	SC0.4268S	FUSELLO CRG KZ V11 10-25 RX D SX CROM	STUB AXLE CRG KZ V11 10-25*D LH
	SC0.4268D	FUSELLO CRG KZ V11 10-25 RX D DX CROM	*STUB AXLE CRG KZ V11 10-25*D RH COMP*
15	AFN.00286	DADO M 8 METALBLOCK	*NUT M 8 METALBLOCK*
16	AFN.00047	RONDELLA 8 ONDULATA	*UNDULATED WASHER 8*
17	FMG.0363S	PINZA ANTERIORE V11 ROSSA G SX ORO COMPL.	FRONT BRAKE CALIPER V11 I LF GOLD
	FMG.0363D	PINZA ANTERIORE V11 ROSSA G DX ORO COMPL.	*FRONT BRAKE CALIPER V11 I RH GOLD*
18	AFN.00107	VITE M 8X 25 ESAGONALE 5739	*M 8X25 HEXAGONAL HEAD SCREW*
19	SBN.00372	BUSSOLA DISCO FRENO ANTERIORE	*FRONT BRAKE DISC BUSH*
20	FL1.0422503	DISCO FRENO ANTERIORE V11 154 STD	*BRAKE DISC FRONT V11 154 STD*
21	AFN.00230	RONDELLA DISCO FRENO ELASTICA Ø10-20	*BRAKE DISC ELASTIC WASHER*
22	AFN.00231	SEEGER D 8 DISCO FRENO	*SEEGER D8 BRAKE DISC*
23	AFS.00232	SPINA ELASTICA D10 DISCO FRENO	*ELASTIC PIN Ø10 BRAKE DISC*
24	AFN.01750	CUSCINETTO 61905 ZZ MOZZO ANT. D25	*BEARING FRONT HUB Ø25*
25	AFN.00008	CUSCINETTO 6003 ZZ MOZZO ANT. D17	*BEARING FRONT HUB Ø17*
26	SAN.01893	MOZZO DISCO ANT.AL KZ2 V05 25 DURO	*ALUMINUM FRONT BRAKE DISC HUB V05*
27	AFN.01564	RONDELLA 15X30X2,5	*WASHER 15-30X2,5*
28	AFN.00058	DADO M14X1,5 AUTOBLOCK BASSO	*NUT M14X1,5 SELF-LOCKING*
29	AFS.0024601	CHIAVETTA ASSALE 2 PIOLI BRUNITA	*REAR AXLE KEYWAY 2 PINS*
30	FMG.05666	MOZZO ANTERIORE KZ 40X 80 R2.0 AL ORO COMPLETO	*FRONT HUB KZ 40 X 80 R2.0 ALUMINUM GOLD COMPLETE*
31	FK0.02352	SET CASTER SNIPER KZ/KF COMPLETO	SNIPER CASTER SYSTEM COMPLETE KZ/KF
32	FM0.4268S	FUSELLO CRG KZ V11 10-25 RX D SX COMP STD	STUB AXLE KZ V11 10-25 LF RX COMPLETE STD
	FM0.4268D	FUSELLO CRG KZ V11 10-25 RX D DX COMP STD	*STUB AXLE KZ V11 10-25 RH RX COMPLETE STD*

PEDALIERA COMPLETA – FOOTREST ASSEMBLY

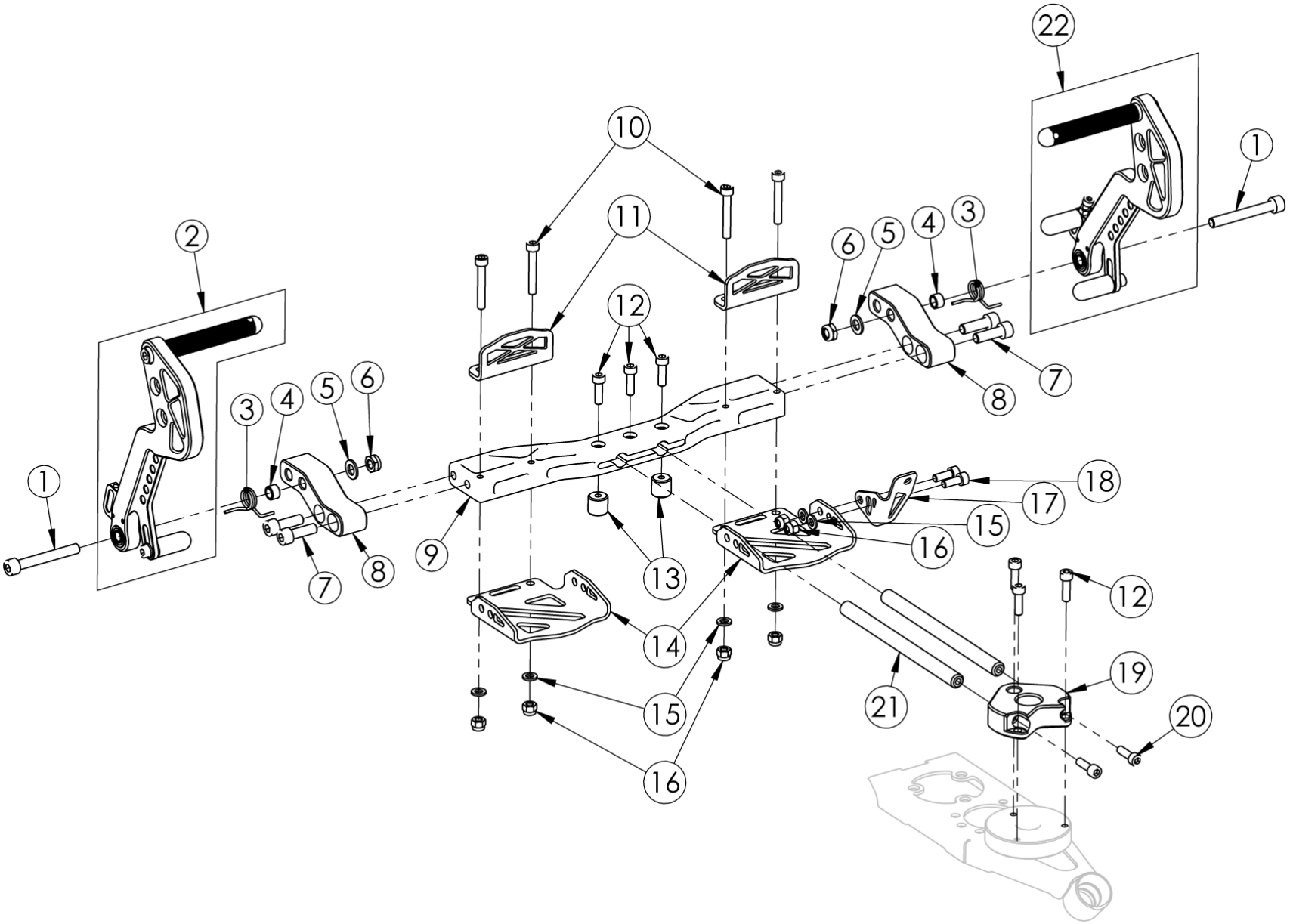

POS.	COD.	DESCRIZIONE	*DESCRIPTION*
1	AFN.02311	VITE M 8X 60 CILINDRICA 5931	*M8X60 SOCKET HEAD SCREW*
2	FM0.6866S	PEDALE COMPLETO ARRETRATO 2.1 FRENO	*2.1 COMPLETE PEDAL EXTENSION BRAKE PEDAL*
3	SZ0.06875	MOLLA PEDALE PEDALIERA ARRETRATA 2.1	*2.1 PEDAL EXTENSION SPRING*
4	SZ0.06876	DIST. BATTUTA MOLLA PEDALIERA ARRETRATA 2.1	*2.1 PEDAL EXTENSION SPRING SPACER*
5	AFN.00105	RONDELLA 6,5-12X1,5	*WASHER 6,5-12X1,5*
6	AFN.00160	DADO M 8 AUTOBLOCK BASSO	*NUT M8 LOW SELF-LOCKING*
7	AFN.00732	VITE M 8X 25 CILINDRICA 5931	*M 8X25 SOCKET HEAD SCREW*
8	SAN.06874	ATTACCO PEDALE ARRETRATO 2.1	*2.1 PEDAL EXTENSION PEDAL MOUNT*
9	SAN.06865	BASE PEDALIERA ARRETRATA 2.1	*2.1 PEDAL EXTENSION BASE*
10	AFN.00368	VITE M 6X 40 CILINDRICA 5931	*M 6X40 SOCKET HEAD SCREW*
11	AML.07038	POGGIATACCO PEAR 2.1	*2.1 PEDAL EXTENSION HEEL SUPPORT*
12	AFN.00183	VITE M 6X 20 CILINDRICA 5931	*M6X20 SOCKET HEAD SCREW*
13	SL1.07207	TAMPONE NYLON PEDALIERA REG. RR ROTAX	*RRROTAX PEDAL EXTENSION NYLON BUMPER*
14	AML.06868	POGGIAPIEDI PEDALE ARRETRATO 2.1 INOX	*2.1 PEDAL EXTENSION FOOTREST*
15	AFN.00105	RONDELLA 6,5-12X1,5	*WASHER 6,5-12X1,5*
16	AFN.00264	DADO M 6 AUTOBLOCK ALTO	*NUT M6 HIGH SELF-LOCKING*
17	SZN.06873	SUPP. CAVO GAS PEDALIERA ARRETRATA 2.1	*2.1 PEDAL EXTENSION THROTTLE CABLE BRACKET*
18	AFN.01585	VITE M 6X 16 CILINDRICA 5931	*M6X16 SOCKET HEAD SCREW*
19	SAN.06867	SUPP. PERNI PEDALIERA ARRETRATA 2.1	*2.1 PEDAL EXTENSION PIN SUPPORT*
20	AFN.00183	VITE M 6X 20 CILINDRICA 5931	*M6X20 SOCKET HEAD SCREW*
21	SZN.06871	PERNO GUIDA POGGIAPIEDI PEDALIERA ARRETRATA 2.1	*2.1 PEDAL EXTENSION FOOTREST GUIDE PIN*
22	FM0.6866D	PEDALE COMPLETO ARRETRATO 2.1 GAS	*2.1 COMPLETE PEDAL EXTENSION GAS PEDAL*

ASSALE – REAR AXLE

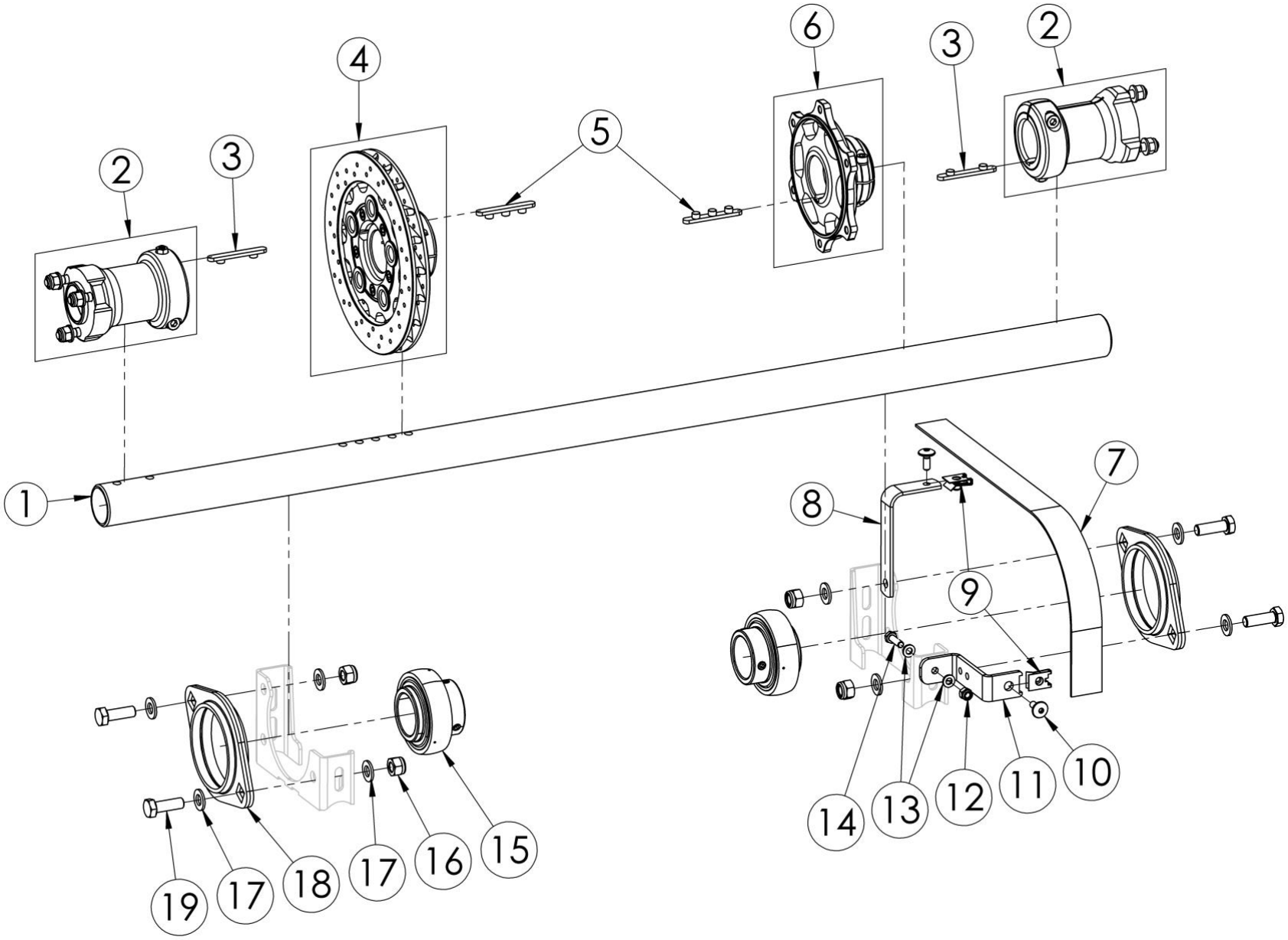

POS.	COD.	DESCRIZIONE	*DESCRIPTION*
1	FBN.01663	ASSALE 40 1040 DD2 M NERO	AXLE 40 DD2 1040 M
2	FMG.06194	MOZZO POSTERIORE 40X105 R2.0 AL ORO COMP.	*ALU REAR HUB 40X105 R2.0 GOLD COMPLETE*
3	AFS.0024601	CHIAVETTA ASSALE 2 PIOLI BRUNITA	*REAR AXLE KEYWAY 2 PINS*
4	FKG.01250	DISCO POST.40 V11 192 G-AL MONTATO ORO	*PRE-ASSEMBLED. 40 V11 192 G-AL GOLD REAR DISC*
5	AFS.0024701	CHIAVETTA ASSALE 3 PIOLI BRUNITA	*REAR AXLE KEYWAY 3 PINS*
6	FMG.00445	MOZZO CORONA AL 40 100 ORO COMP	*RING CARRIER 40 100 GOLD COMP*
7	AFS.00338	PARACATENA KZ DIRITTO	*STRAIGHT CHAIN GUARD*
8	FZ0.02566	SUPPORTO PARACATENA KZ FLANGE RID	*CHAIN GUARD SUPPORT (REDUCT. SYS)*
9	AFS.02327	CLIPS PRESTOLA M6 CENTURION	*CENTURION CLIPS M6 FOR FITTING*
10	AFS.00261	VITE TESTA TONDA LARGA M 6X 16 PIANALE	*FLOOR TRAY SCREW LARGE ROUND HEAD M6X16*
11	SZ0.04903	PIASTRA DISTANZIALE CARENA POST.BIPOSTO 70MM	*70MM 2SEATER REAR FAIRING SPACER PLATE*
12	AFN.00264	DADO M 6 AUTOBLOCK ALTO	*NUT M6 HIGH SELF-LOCKING*
13	AFN.00105	RONDELLA 6,5-12X1,5	*WASHER 6,5-12X1,5*
14	AFN.00233	VITE M 6X 20 ESAGONALE 5739	*M6X20 HEXAGONAL HEAD SCREW*
15	AFN.00448	CUSCINETTO ASSALE 40 C/GRANI 208 ZZ	*AXLE BEARING 40 WITH GRUB SCREWS*
16	AFN.02393	DADO M10 AUTOBLOCK ALTO	*NUT M10 HIGH SELF-LOCKING*
17	AFN.01637	RONDELLA 10,5-20X2	*WASHER 10,5-20X2*
18	AFN.07208	COPPIA FLANGE X CUSCINETTO ASSALE 40 2F CENT	*40 2F CENT AXLE BEARING FLANGES PAIR*
19	AFN.00307	VITE M 8X 30 ESAGONALE 5739	*M 8X30 HEXAGONAL HEAD SCREW*

DISCO FRENO E MOZZO – BRAKE DISC AND HUB

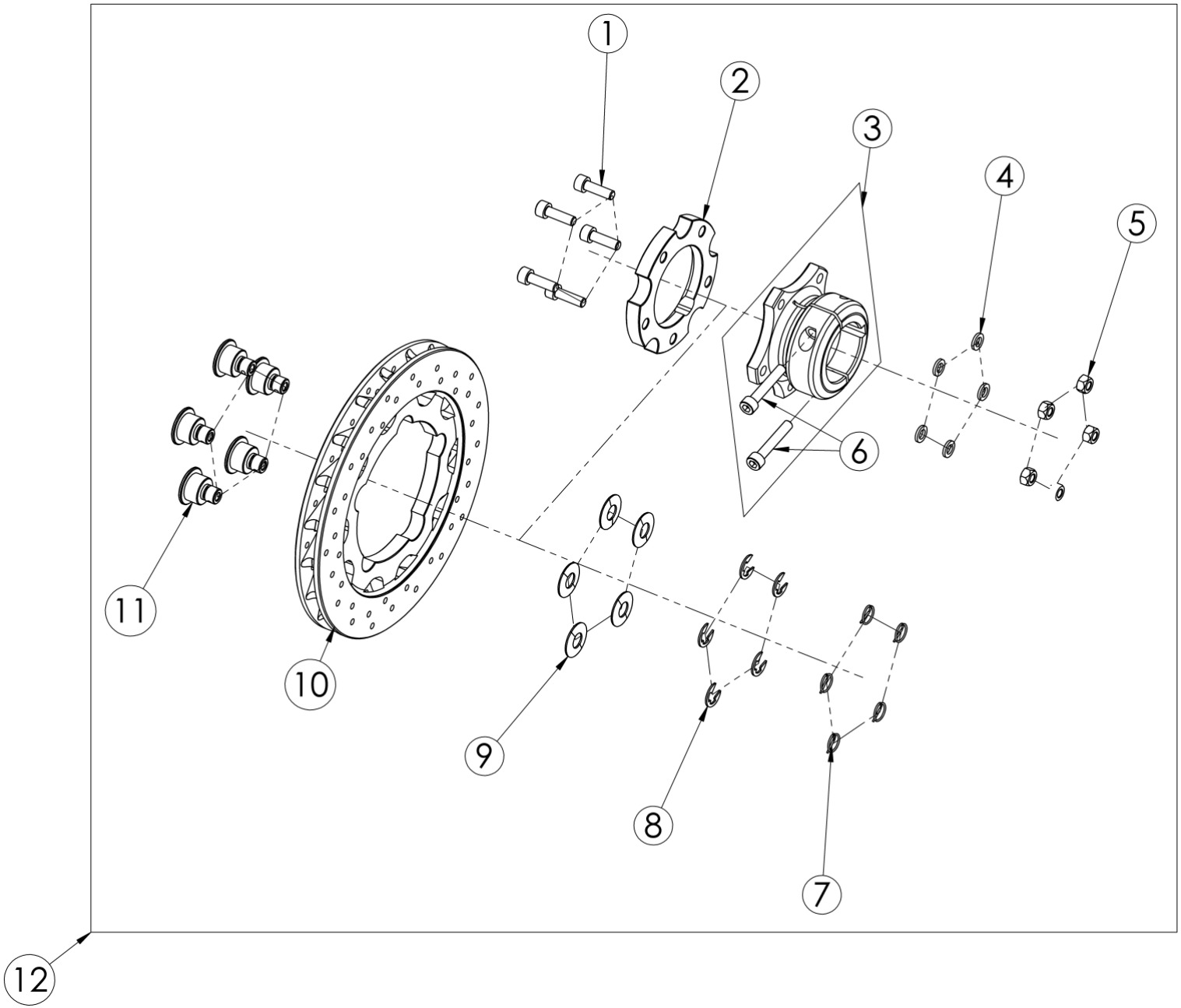

POS.	COD.	DESCRIZIONE	*DESCRIPTION*
1	AFN.00183	VITE M 6X 20 CILINDRICA 5931	M6X20 SOCKET HEAD SCREW
2	SAN.01592	FLANGIA DISCO POSTERIORE V11	*REAR BRAKE DISC FLANGE V11*
3	FMG.06223	MOZZO DISCO POSTERIORE AL 40 R2.0 ORO COMP.	ALU. REAR BRAKE DISC HUB 40 R2.0 COMPLETE
4	AFN.06156	RONDELLA 6,5-10X1 ACCIAIO INOX	*BRASS WASHER 6,5-10X1 INOX*
5	AFN.00234	DADO M 6 METALBLOCK	*NUT M 6 METALBLOCK*
6	AFN.00137	VITE M 6X 35 CILINDRICA 5931	*M 6X35 SOCKET HEAD SCREW*
7	AFS.00232	SPINA ELASTICA D10 DISCO FRENO	*ELASTIC PIN Ø10 BRAKE DISC*
8	AFN.00231	SEEGER D 8 DISCO FRENO	*SEEGER D8 BRAKE DISC*
9	AFN.01677	RONDELLA DISCO FRENO ELASTICA POST Ø10-23	*BRAKE DISC ELASTIC WASHER V11*
10	FL1.0422403	DISCO FRENO POSTERIORE V11 192 STD	*REAR BRAKE DISC V11 Ø192 STD*
11	SBN.01660	BUSSOLA DISCO FRENO POST.V11	*REAR BRAKE DISC V11 BUSHING*
12	FKG.01250	DISCO POST.40 V11 192 G-AL MONTATO ORO	*PRE-ASSEMBLED. 40 V11 192 G-AL GOLD REAR DISC*

IMPIANTO FRENANTE – BRAKE SYSTEM

Sono disponibili 3 aste freno: 39 cm – 44 cm – 48 cm
There are 3 brake rods available: 39 cm – 44 cm – 48 cm

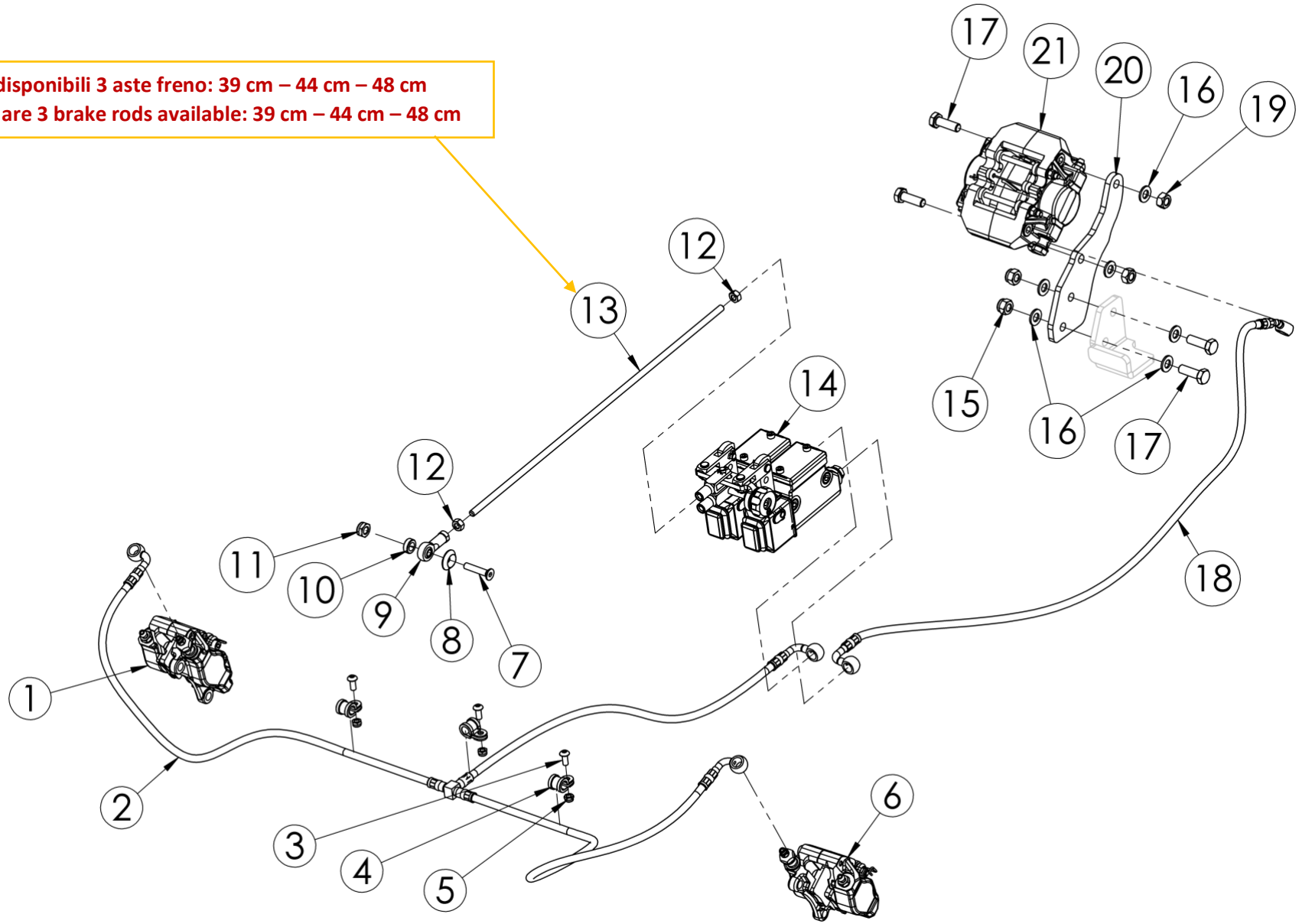

POS.	COD.	DESCRIZIONE	*DESCRIPTION*
1	FMG.0363D	PINZA ANTERIORE V11 ROSSA G DX ORO COMPL.	*FRONT BRAKE CALIPER V11 I RH GOLD*
2	AFS.00336	TUBO FRENO OCCHIELLO TRIS ANT V11 ROSSO	*FRONT BRAKE HOSE TRIS V11 EYELET*
3	AFN.00359	VITE M 5X 12 BOMBATA 7380	*M 5X12 CONVEX HEAD SCREW*
4	AFN.03912	FASCETTA FERMA TUBO FRENO Ø6	*BRAKE TUBE BAND D6*
5	AFN.00360	DADO M 5 AUTOBLOCK BASSO	*NUT M 5 LOW SELF-LOCKING*
6	FMG.0363S	PINZA ANTERIORE V11 ROSSA G SX ORO COMPL.	*FRONT BRAKE CALIPER V11 I LF GOLD*
7	AFN.00499	VITE M 6X 30 SVASATA 5933	*M 6X30 CONTERSUNK HEAD SCREW*
8	SAN.00249	RONDELLA 6 SVASATA NERA	*WASHER 6 COUNTERSUNK BLACK*
9	AFS.05848	UNIBALL M6 FEMMINA FORO M6	*UNIBALL M6 FEMALE HOLE*
10	FBN.00252	SPESSORE 8,5-14X 5 BARRETTA	*ROD SPACER 8,5-14X5 TRACK ROD*
11	AFN.00160	DADO M 8 AUTOBLOCK BASSO	*NUT M8 LOW SELF-LOCKING*
12	AFN.00093	DADO M 6	*NUT M 6*
13	SBN.03936	ASTA FRENO ZINCATA CM.39	*BRAKE ROD CM.39*
13	SBN.06267	ASTA FRENO ZINCATA CM.44	*BRAKE ROD CM.44*
13	SBN.00801	ASTA FRENO ZINCATA CM.48	*BRAKE ROD CM.48*
14	FMG.00329	DOPPIA POMPA V11 C/RIPART.KZ ORO	*DOUBLE MASTER CYLINDER V11 WITH EQUAL. GOLD*
15	AFN.00128	DADO M 8 AUTOBLOCK ALTO	*NUT M8 HIGH SELF-LOCKING*
16	AFN.00350	RONDELLA 8,5-16X1,5	*WASHER 8,5-16X1,5*
17	AFN.00107	VITE M 8X 25 ESAGONALE 5739	*M 8X25 HEXAGONAL HEAD SCREW*
18	AFS.00240	TUBO FRENO OCCHIELLO MM 720 ROSSO POST V11	*BRAKE TUBE V11 REAR EYEL. 720MM*
19	AFN.00286	DADO M 8 METALBLOCK	*NUT M 8 METALBLOCK*
20	SZ0.07181	PIASTRA SUPPORTO PINZA POST. RR ROTAX	*RRROTAX REAR CALIPER MOUNTING PLATE*
21	FMG.01800	PINZA FRENO POSTERIORE V09-10-11 30 ROSSA G ORO	*REAR BRAKE CALIPER BK-09-10-11 30 COMP GOLD*

POMPA FRENO – MASTER CYLINDER

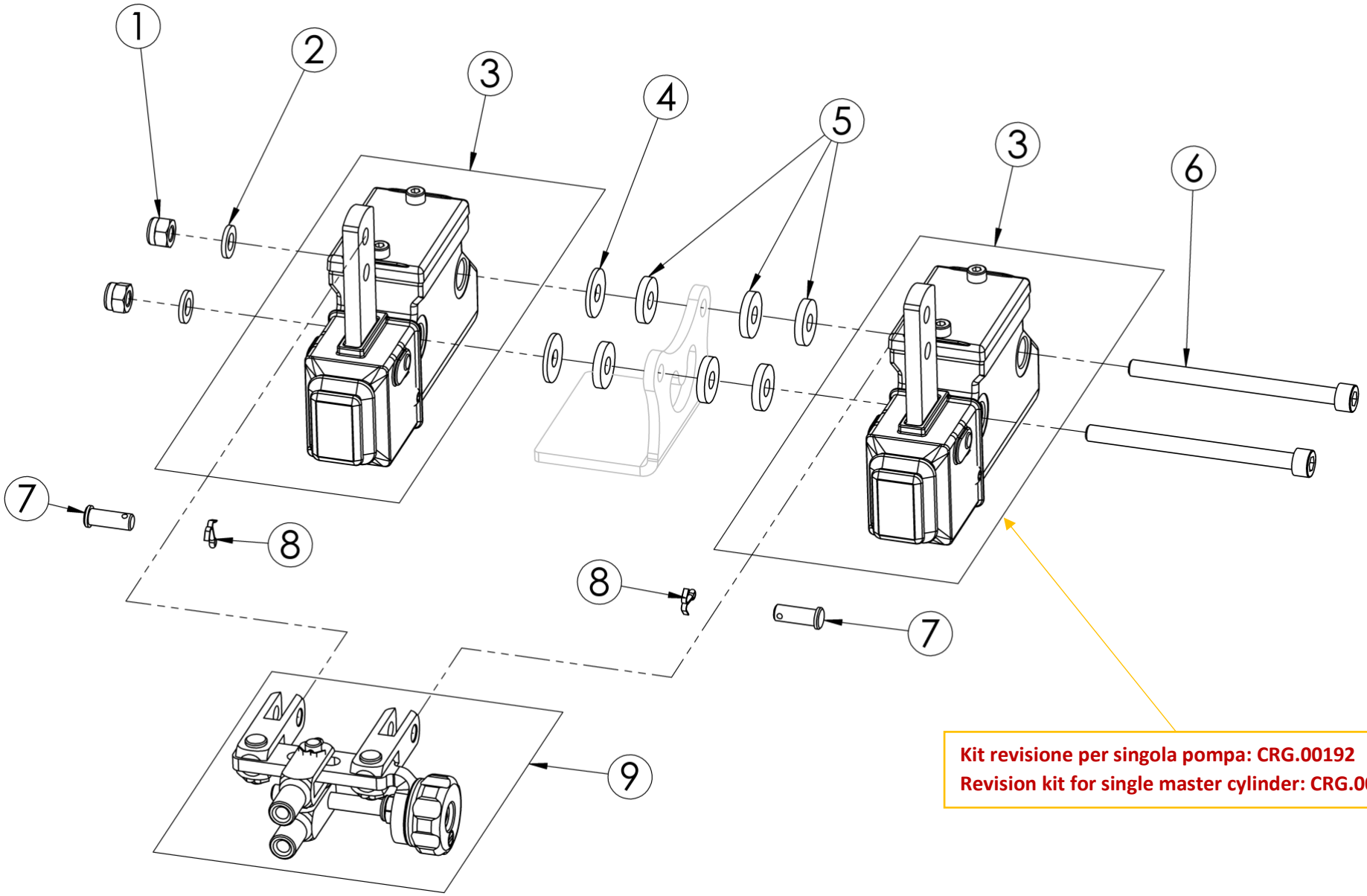

Kit revisione per singola pompa: CRG.00192
Revision kit for single master cylinder: CRG.00192

POS.	COD.	DESCRIZIONE	*DESCRIPTION*
1	AFN.00264	DADO M 6 AUTOBLOCK ALTO	NUT M6 HIGH SELF-LOCKING
2	AFN.00105	RONDELLA 6,5-12X1,5	*WASHER 6,5-12X1,5*
3	FMG.00192	POMPA FRENI V11 ORO COMPL. FS4-MINI	*REAR MASTER CYLINDER V11 COMPLETE GOLD FS4 MINI*
4	AFN.00263	RONDELLA 6,5-18X1,6	*WASHER 6,5-18X1,6*
5	SBN.00220	SPESSORE 6,5-15X 3 POMPA DIN 7349	*MASTER CYLINDER SPACER 6,5-15X3*
6	AFN.00786	VITE M 6X 80 CILINDRICA 5931	*M6X80 SOCKET HEAD SCREW*
7	SBN.00214	SPINA RIPARTITORE MM17,5	*DIVIDER PIN 17,5MM*
8	AFN.00201	COPIGLIA	*MASTER CYLINDER SPLIT PIN*
9	FM0.05027	RIPARTITORE FRENATA KZ CON POSIZIONATORE	*BRAKE EQUALIZER KZ ASSY WITH POSITIONS*
10	CRG.00192	KIT REVISIONE POMPA FRENO V11	REVISION KIT MASTER CYLINDER V11

PINZA FRENO ANTERIORE – FRONT BRAKE CALIPER

No.	Right side	Left side
5	SAG.0364D	SAG.0364S
11	SAG.0365D	SAG.0365S
16	FMG.0363D	FMG.0363S

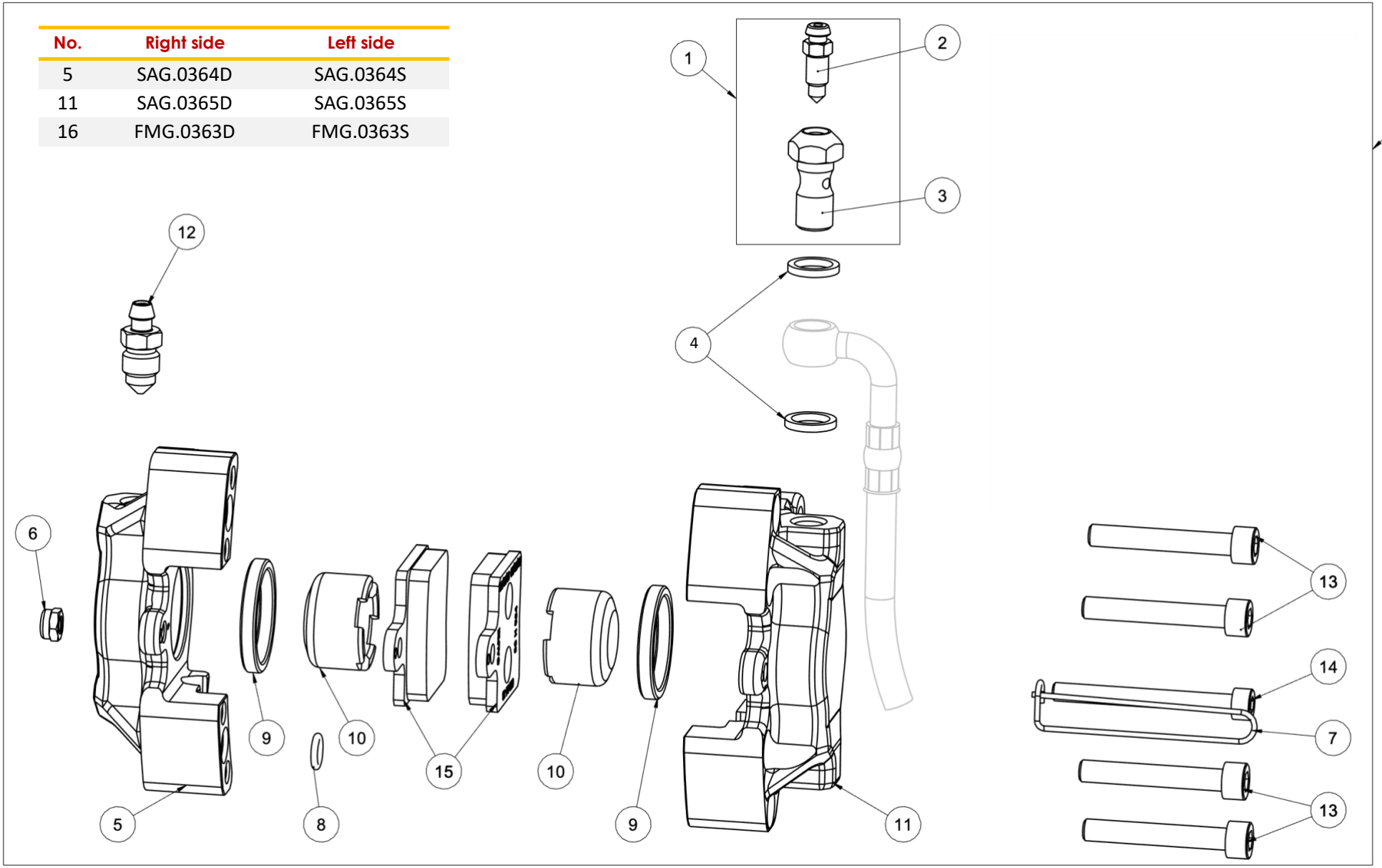

POS.	COD.	DESCRIZIONE	*DESCRIPTION*
1	FM0.00308	RACCORDO COMBINATO COMPLETO	BLEEDER FITTING COMPLETE
2	SZ0.00309	SPURGO M 6 V11	*BLEEDER M6 V11*
3	SZ0.00308	RACCORDO COMBINATO M10	*BLEEDER FITTING M10*
4	AFN.00186	RONDELLA 10,5-14X2 RAME	*COPPER WASHER 10,5-14X2*
5	SAG.0364S	SEMI PINZA ANT.V11 SX ORO	*HALF FRONT BRAKE V11 LEFT GOLD*
	SAG.0364D	SEMI PINZA ANT.V11 DX ORO	*HALF FRONT CALIPER V11 RH GOLD*
6	AFN.00360	DADO M 5 AUTOBLOCK BASSO	*NUT M 5 LOW SELF-LOCKING*
7	AFS.00187	SPINA SICUREZZA ANT.V11	*FRONT SAFETY PIN V11*
8	AFN.03814	OR PINZA 5 X 2 V11 ANTERIORE (IN MATERIALE EPDM)	*FRONT O-RING CALIPER 5X2 V11*
9	AFS.00179	GOMMINO PINZA ANTERIORE Ø26 V11	*PISTON SEAL FRONT D26 V11*
10	SD1.00370	PISTONCINO PINZA V11 ANT(EX UP-V04)	*V11 FRONT BRAKE CALIPER PISTON*
11	SAG.0365S	SEMI PINZA ANT.V11 C/ORECCHIE SX ORO	*HALF CALIPER V11 FRONT LEFT GOLD WITH FITTINGS*
	SAG.0365D	SEMI PINZA ANT.V11 C/ORECCHIE DX ORO	*HALF CALIPER V11 FRONT RIGHT GOLD WITH FITTINGS*
12	SZ0.00184	SPURGO M10 V11	*BLEEDER M10 V11*
13	AFN.00368	VITE M 6X 40 CILINDRICA 5931	*M 6X40 SOCKET HEAD SCREW*
14	AFN.00367	VITE M 5X 55 CILINDRICA 5931	*M 5X55 SOCKET HEAD SCREW*
15	AFS.02997	PASTIGLIA FRENO ANT. V11 ROSSA	*FRONT BRAKE PAD V11 RED*
16	FMG.0363S	PINZA ANTERIORE V11 ROSSA G SX ORO COMPL.	*FRONT BRAKE CALIPER V11 I LF GOLD*
	FMG.0363D	PINZA ANTERIORE V11 ROSSA G DX ORO COMPL.	*FRONT BRAKE CALIPER V11 I RH GOLD*

PINZA FRENO POSTERIORE – REAR BRAKE CALIPER

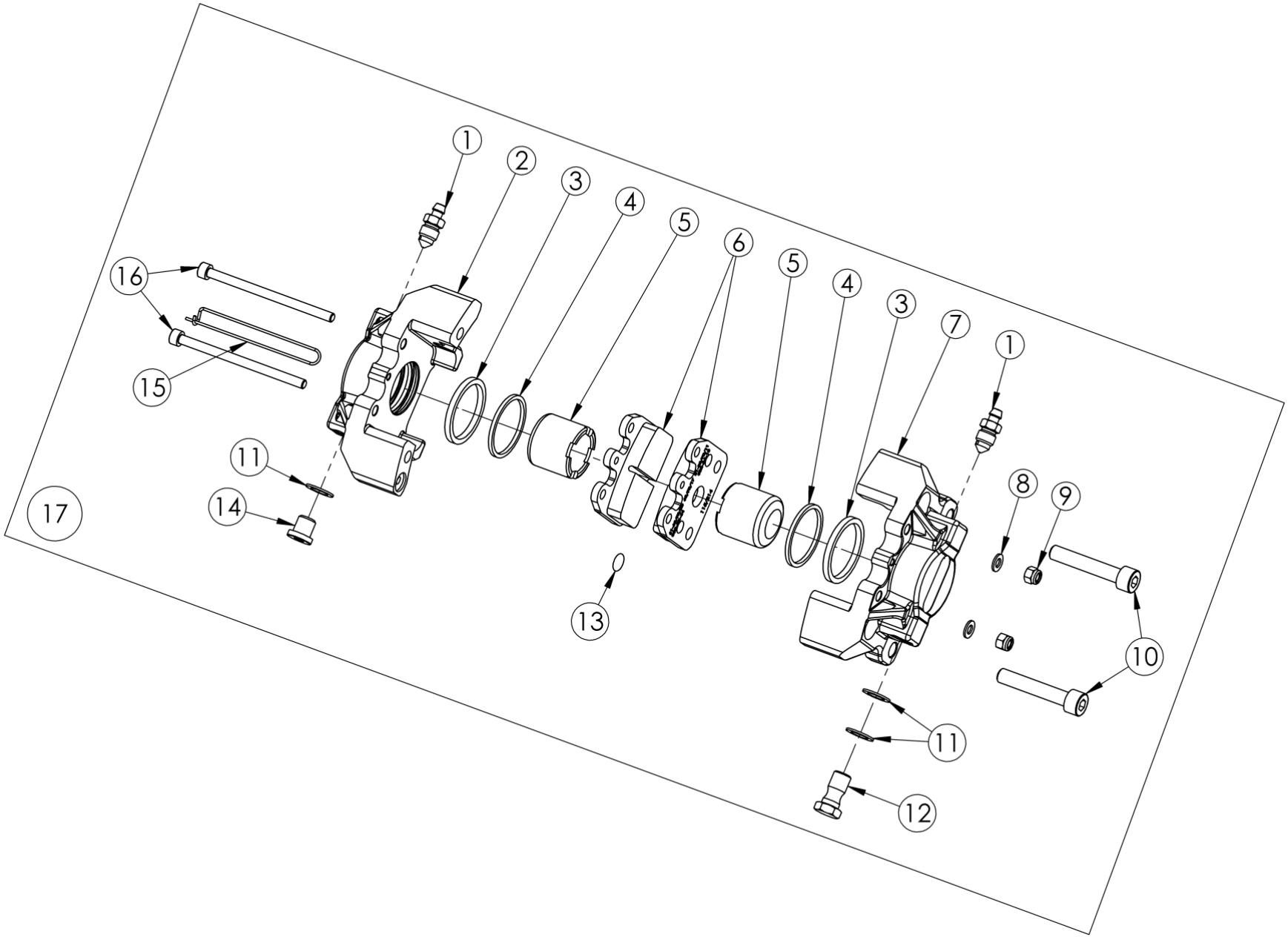

POS.	COD.	DESCRIZIONE	*DESCRIPTION*
1	SZ0.00184	SPURGO M10 V11	BLEEDER M10 V11
2	SAG.1800S	SEMI PINZA POST.BK-11 30 SX ORO	*HALF REAR BRAKE CALIPER V11 30 LEFT GOLD*
3	AFS.03022	GOMMINO PINZA POSTERIORE Ø30 V11	*REAR BRAKE CALIPER SEAL Ø30 V11*
4	AFS.03023	GOMMINO PARAPOLVERE Ø30 V09/V10	*DUST GUARD SEAL Ø30*
5	SD1.01801	PISTONCINO PINZA V11 POSTERIORE 30	*REAR BRAKE CALIPER PISTON V11*
6	AFS.01745	PASTIGLIA FRENO POST. V11 ROSSA	*REAR BRAKE PAD V11 RED*
7	SAG.1800D	SEMI PINZA POST.BK-11 30 DX ORO	*HALF REAR BRAKE CALIPER V11 30 GOLD*
8	AFN.02264	RONDELLA 5,3-10X1	*WASHER 5,3-10X1*
9	AFN.02176	DADO M 5 AUTOBLOCK ALTO	*M5 HIGH SELF-LOCKING NUT*
10	TCI.05X045	VITE M 5X 45 CILINDRICA	*M 5X 45 SOCKET HEAD SCREW*
11	AFN.05870	RONDELLA 10 -16X2 RAME	*COPPER WASHER 10 -16X2*
12	SZ0.00185	RACCORDO M10 V11	*FITTING M10 V11*
13	AFN.00182	OR PINZA 6 X 2 V11 POSTERIORE (IN MATERIALE EPDM)	*REAR O-RING CALIPER 6X2 V11*
14	SBN.00369	TAPPO M10 V11	*CALIPER CAP M10 V11*
15	AFS.01682	SPINA SICUREZZA PINZA POST.V05/V08	*REAR SAFETY PIN*
16	AFN.01679	VITE M 5X 80 CILINDRICA 5931	*M 5X80 SOCKET HEAD SCREW*
17	FMG.01800	PINZA FRENO POSTERIORE V09-10-11 30 ROSSA G ORO	*REAR BRAKE CALIPER BK-09-10-11 30 COMP GOLD*

SUPPORTO MOTORE E AFFINI – ENGINE MOUNT AND RELATED COMPONENTS

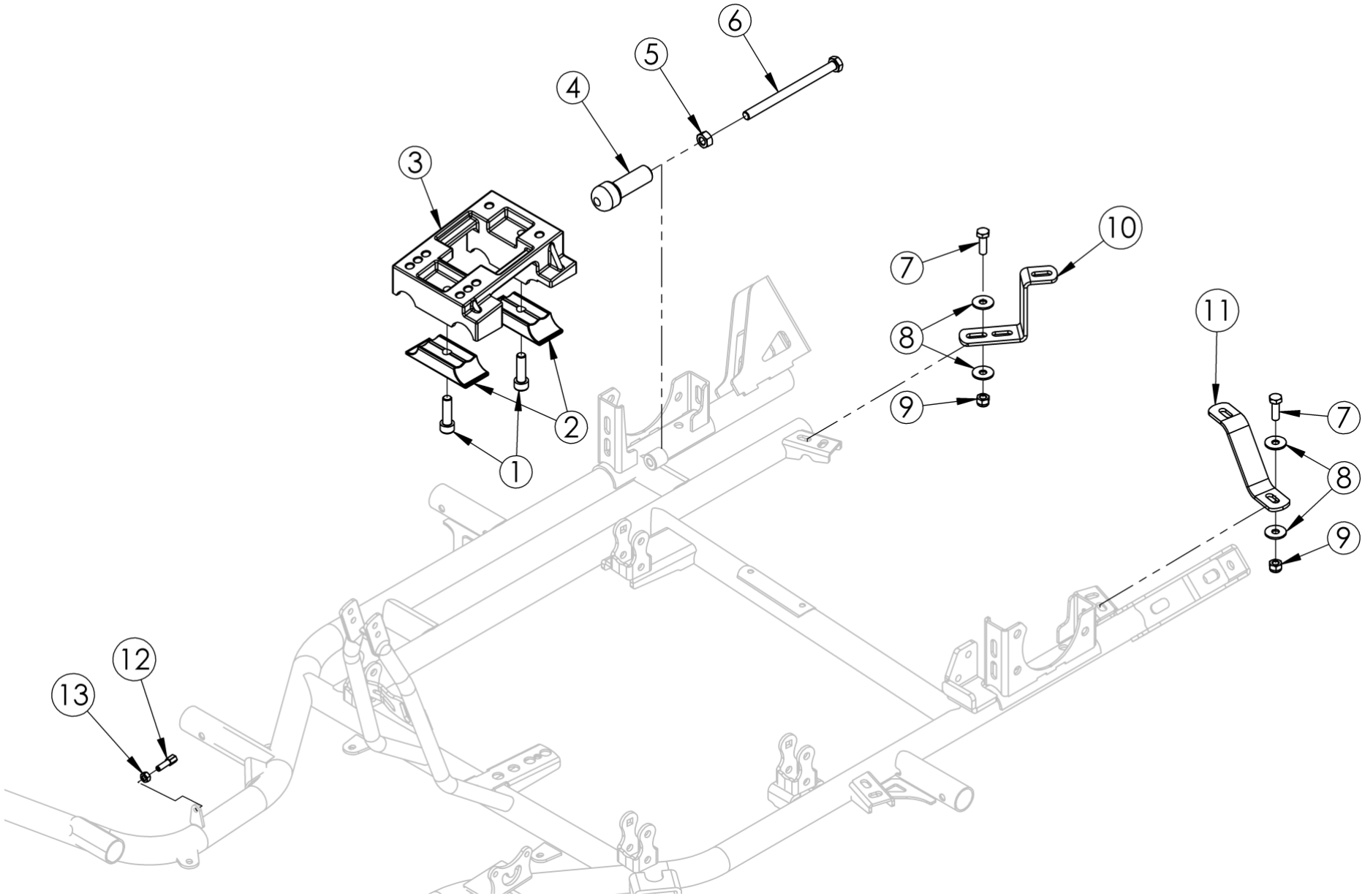

SUPPORTO MOTORE E AFFINI – ENGINE MOUNT AND RELATED COMPONENTS

POS.	COD.	DESCRIZIONE	*DESCRIPTION*
1	AFN.04565	VITE M10X 35 CILINDRICA 5931	M10X35 CYLINDRICAL SCREW
2	SAN.06449	CAVALLOTTO MOTORE CORTO CRG AL 32 NERO	*ENGINE MOUNT CLAMP CRG ALUM BLACK SHORT*
3	FFN.00072	PIASTRA MOTORE 32 CRG MG FORATA INCLIN.	*ENGINE MOUNT MAGNESIUM 32 CRG*
4	SL1.05697	TAPPO TENDICATENA MINI	*MINI CHAIN TENSIONER CAP*
5	AFN.00255	DADO M10	*NUT M10*
6	AFN.02820	VITE M10X140 ESAG. (TENDICATENA MINI) 5739	*M10X140 HEXAGONAL HEAD SCREW*
7	AFN.00107	VITE M 8X 25 ESAGONALE 5739	*M 8X25 HEXAGONAL HEAD SCREW*
8	AFN.02415	RONDELLA 8,5-24X2	*8,5-24X2 WASHER*
9	AFN.00128	DADO M 8 AUTOBLOCK ALTO	*NUT M8 HIGH SELF-LOCKING*
10	SZ0.7204D	STAFFA SOSTEGNO MARMITTA RR ROTAX DX	*RH EXHAUST MOUNTING BRACKET*
11	SZ0.7204S	STAFFA SOSTEGNO MARMITTA RR ROTAX SX	*LH EXHAUST MOUNTING BRACKET*
12	AFS.00257	REGISTRO FILO M6	*CABLE ADJUSTER M6*
13	AFN.00093	DADO M 6	*NUT M 6*

TANICA SERBATOIO 8.5 LT – FUEL TANK 8.5 LT

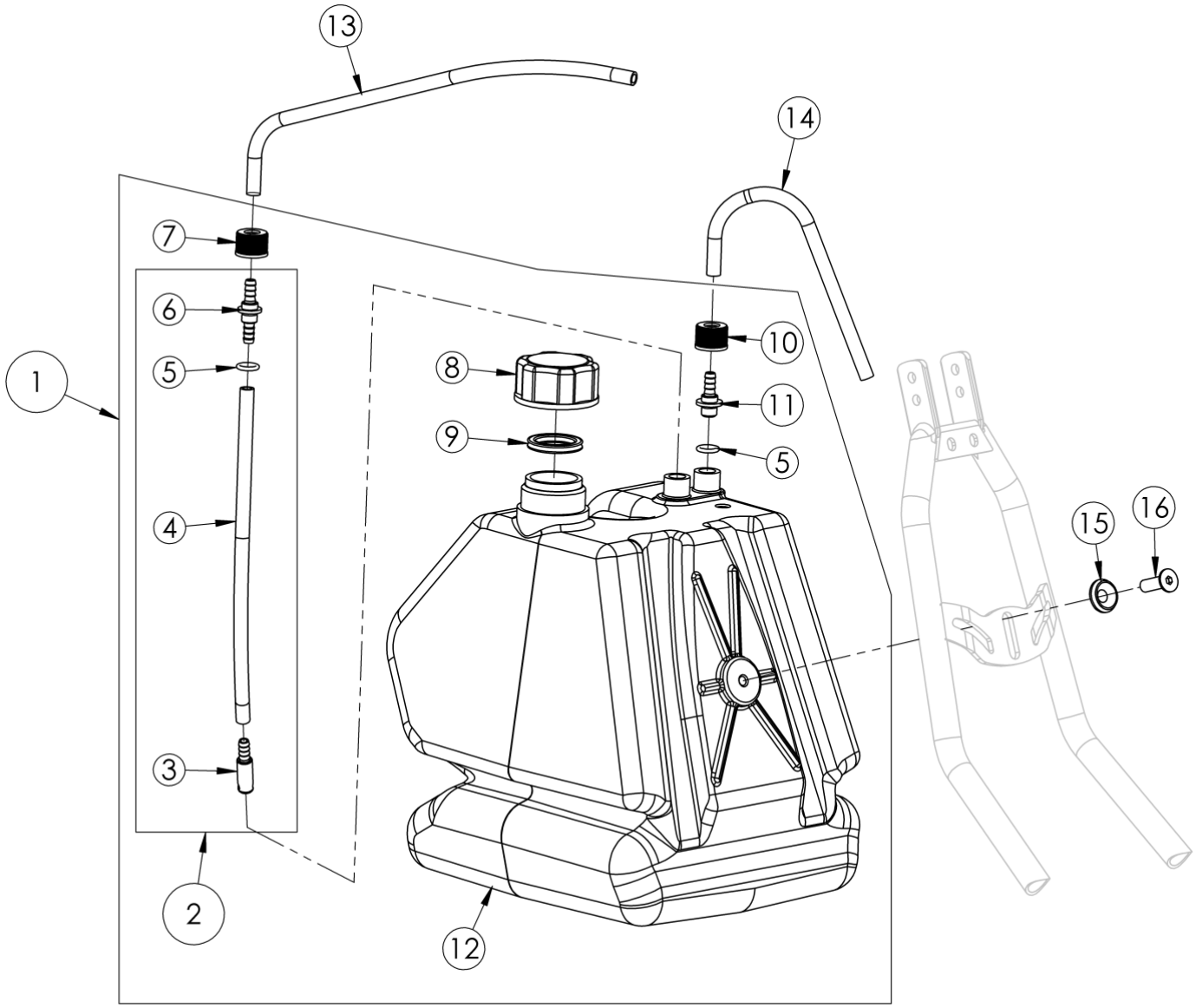

POS.	COD.	DESCRIZIONE	*DESCRIPTION*
1	FM0.00138	TANICA LT.8,5 KF COMPLETA BIANCA	FUEL TANK LT.8,5 COMPLETE WHITE
2	CRG.00147	PESCANTE TANICA LT.8,5 COMPLETO	*FUEL TANK LT.8,5 SUCTION FITTING*
3	SL1.00147	PESCANTE	*FUEL TANK CATCH*
4	SL1.00322	TUBO PESCANTE TANICA LT.8,5 (CM.24)	*FUEL PIPE 24CM*
5	AFN.01379	OR RACCORDO TANICA	*FUEL TANK FITTING O-RING*
6	SL1.00149	RACCORDO PESCANTE TANICA	*FUEL TANK CATCH FITTING*
7	AFS.00142	TAPPINO PESCANTE TANICA (ROSSO)	*FUEL RESEARCH FITTING TAP*
8	AFS.00143	TAPPO TANICA	*FUEL TANK CAP*
9	AFN.00144	GUARNIZIONE TAPPO TANICA	*FUEL TANK CAP RING*
10	AFS.00141	TAPPINO SFIATO TANICA (NERO)	*CAP FUEL TANK*
11	SL1.00151	RACCORDO SFIATO	*BLEEDER FITTING*
12	SL1.00138	TANICA LT.8,5 (SOLO PLASTICA) BIANCA	*FUEL TANK LT.8,5 (PLASTIC) WHITE*
13	AMS.00139	TUBO BENZINA AL METRO	*FUEL PIPE PER METER*
14	AMS.04241	TUBO BENZINA AL METRO 5X10,5 CENTURION	*FUEL PIPE PER METER CENT 5X10,5*
15	SAN.00146	RONDELLA 8 SVASATA NERA	*WASHER 8 COUNTERSUNK BLACK*
16	AFN.00145	VITE M 8X 25 SVASATA 5933	*M8X25 COUNTERSUNK HEAD SCREW*

SEDILE REGOLABILE – ADJUSTABLE SEAT

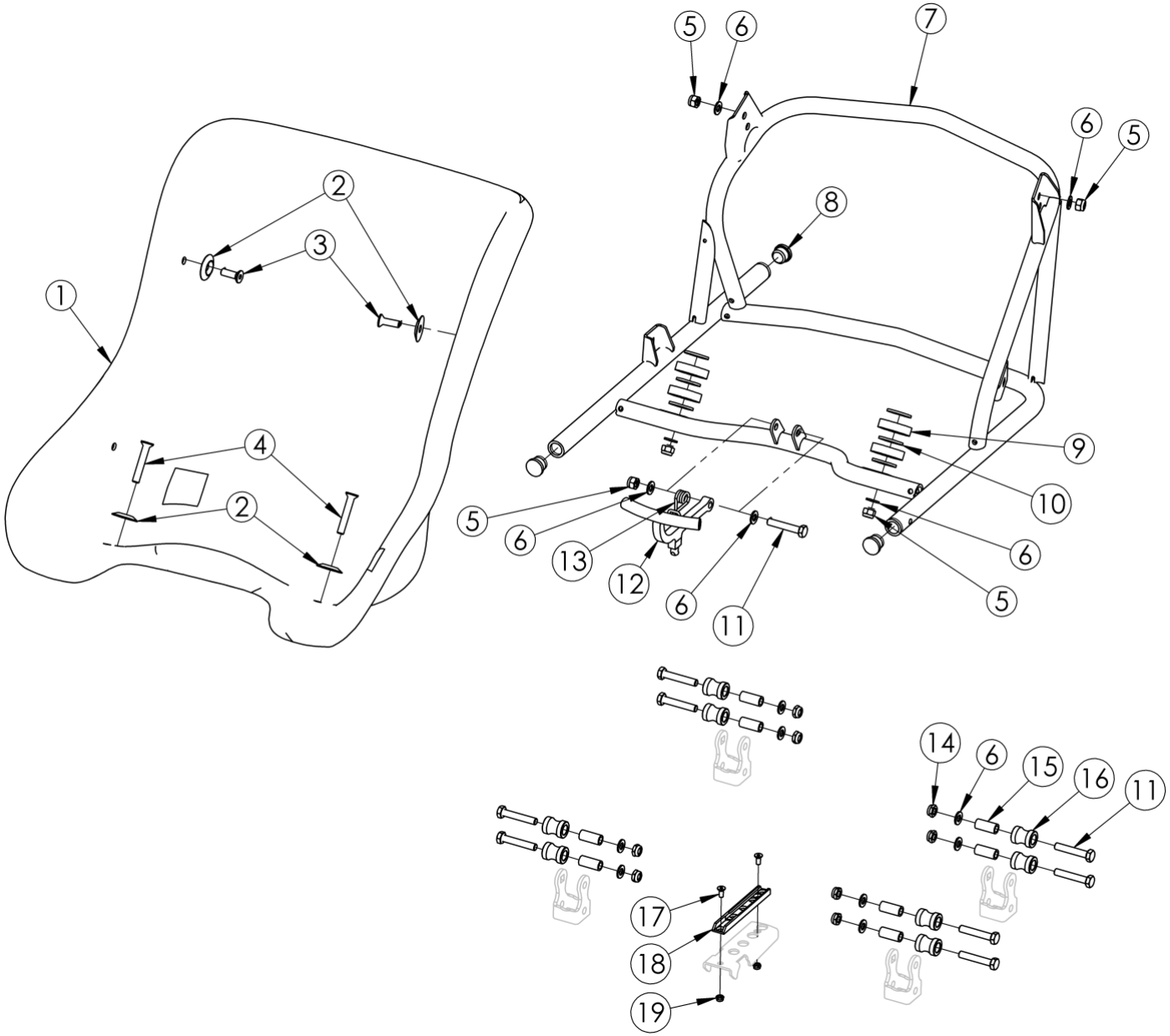

POS.	COD.	DESCRIZIONE	*DESCRIPTION*
1	AFS.02867	SEDILE IN PLASTICA SP.7 CENTURION	CENTURION SP 7MM PLASTIC SEAT
2	FAN.00260	RONDELLA 8 SEDILE ALL.NERA	*ALUMINUM SEAT WASHER BLACK 8*
3	AFN.00145	VITE M 8X 25 SVASATA 5933	*M8X25 COUNTERSUNK HEAD SCREW*
4	AFN.00912	VITE M 8X 50 SVASATA 5933	*M 8X50 COUNTERSUNK HEAD SCREW*
5	AFN.00128	DADO M 8 AUTOBLOCK ALTO	*NUT M8 HIGH SELF-LOCKING*
6	AFN.00350	RONDELLA 8,5-16X1,5	*WASHER 8,5-16X1,5*
7	SC0.03569	CARRELLO SEDILE CENT STANDARD	*CENTURION SEAT TROLLEY*
8	AFS.01119	TAPPINO SUPPORTO MARMITTA CRG/ROTAX	*EXHAUST SUPPORT CAP CRG/ROTAX*
9	AFS.04662	SPESSORE SEDILE 10-27X14 IN NYLON	*SEAT LINING 10-27X14 NYLON*
10	SZ0.E1082	RONDELLA 10 -22X5 CE	*10X22X5 WASHER*
11	AFN.00911	VITE M 8X 45 ESAGONALE 5739	*M 8X45 HEXAGONAL HEAD SCREW*
12	SC0.03576	LEVA FISSAGGIO CARRELLO SEDILE CENT	*CENTURION SEAT TROLLEY LEVER*
13	SZ0.03605	MOLLA FIX CARRELLO SEDILE CENT ZINC	*CENTURION SEAT TROLLEY SPRING*
14	AFN.00160	DADO M 8 AUTOBLOCK BASSO	*NUT M8 LOW SELF-LOCKING*
15	SZ0.03580	DISTANZIALE RULLO CARRELLO SEDILE CENT	*SEAT TROLLEY ROLLER SPACER*
16	FL1.03565	RULLINO GUIDA CARRELLO SEDILE CENT	*SEAT TROLLEY ROLLER*
17	AFN.00533	VITE M 8X 30 SVASATA 5933	*M 8X30 COUNTERSUNK HEAD SCREW*
18	SZ0.E0091.RRR	PIASTRA FISSAGGIO SEDILE ROADREBEL ROTAX	*ROAD REBEL ROTAX SEAT SELECTOR PLATE*
19	AFN.00360	DADO M 5 AUTOBLOCK BASSO	*NUT M 5 LOW SELF-LOCKING*

PARAURTI E PROTEZIONE ANTERIORI – FRONT BUMPER AND FRONT BUFFER

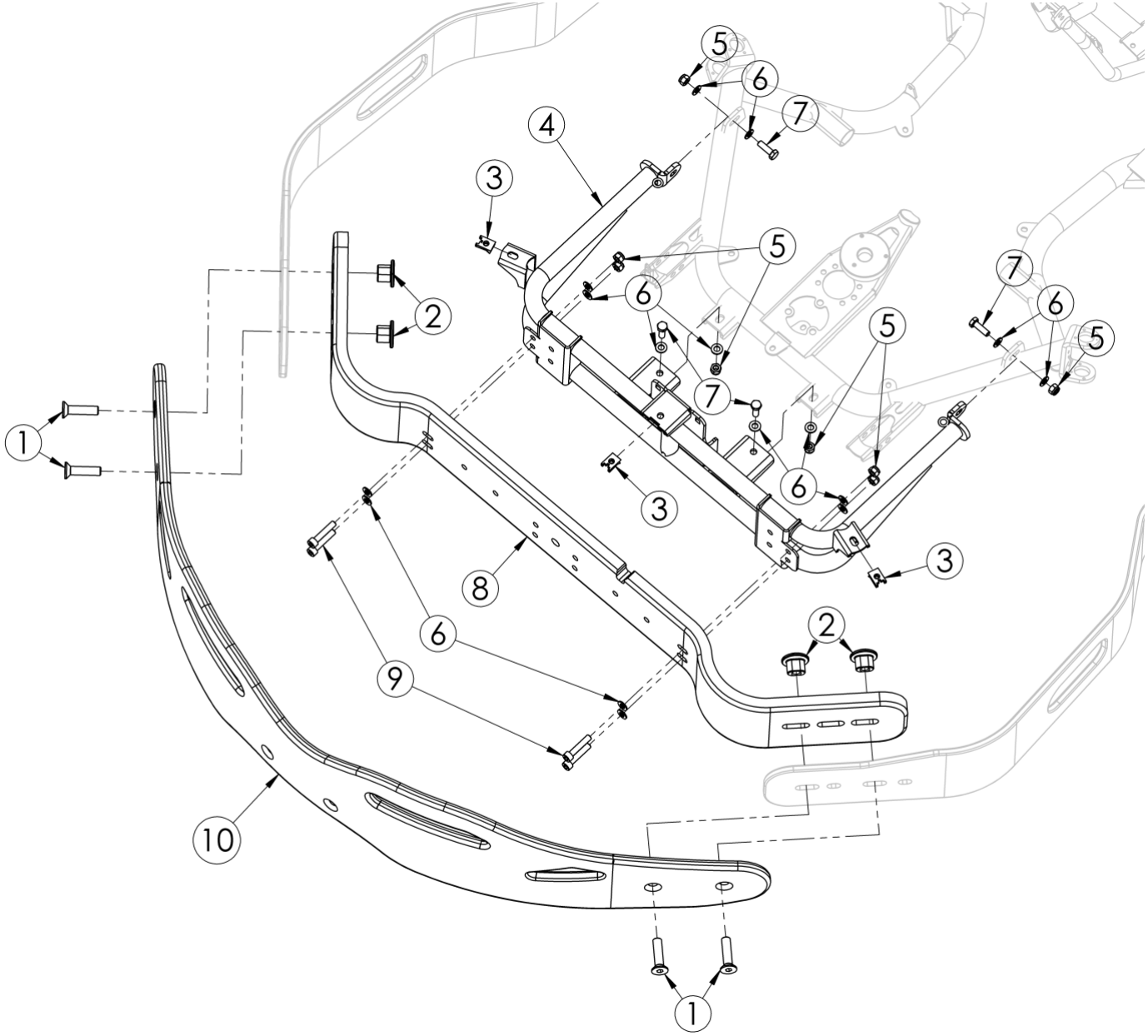

POS.	COD.	DESCRIZIONE	*DESCRIPTION*
1	AFN.02294	VITE M12X 50 SVASATA 5933	M12X50 COUNTERSUNK HEAD SCREW
2	SZ0.00701	DADO M12 OVALE 14X25	*SPECIAL NUT M12 14X25*
3	AFS.02327	CLIPS PRESTOLA M6 CENTURION	*CENTURION CLIPS M6 FOR FITTING*
4	SC0.07189	PARAURTI ANTERIORE RR ROTAX	*FRONT BUMPER FRAME RR ROTAX*
5	AFN.00128	DADO M 8 AUTOBLOCK ALTO	*NUT M8 HIGH SELF-LOCKING*
6	AFN.00350	RONDELLA 8,5-16X1,5	*WASHER 8,5-16X1,5*
7	AFN.00107	VITE M 8X 25 ESAGONALE 5739	*M 8X25 HEXAGONAL HEAD SCREW*
8	AFS.0216109	BALESTRA ANTERIORE CENTRALE CENTURION	*FRONT-CENTRAL LEAF SPRING CENT*
9	AFN.00132	VITE M 8X 40 CILINDRICA 5931	*M8X40 SOCKET HEAD SCREW*
10	AFS.04911	FASCIA PARAURTI ANTERIORE CENT CON PROTEZ. PEDALI	*CENTURION FRONT BUFFER BAND WITH SIDE PROTECTION*

PARAURTI E PROTEZIONE LATERALI – SIDE BUMPER AND SIDE BUFFER

SX - LH

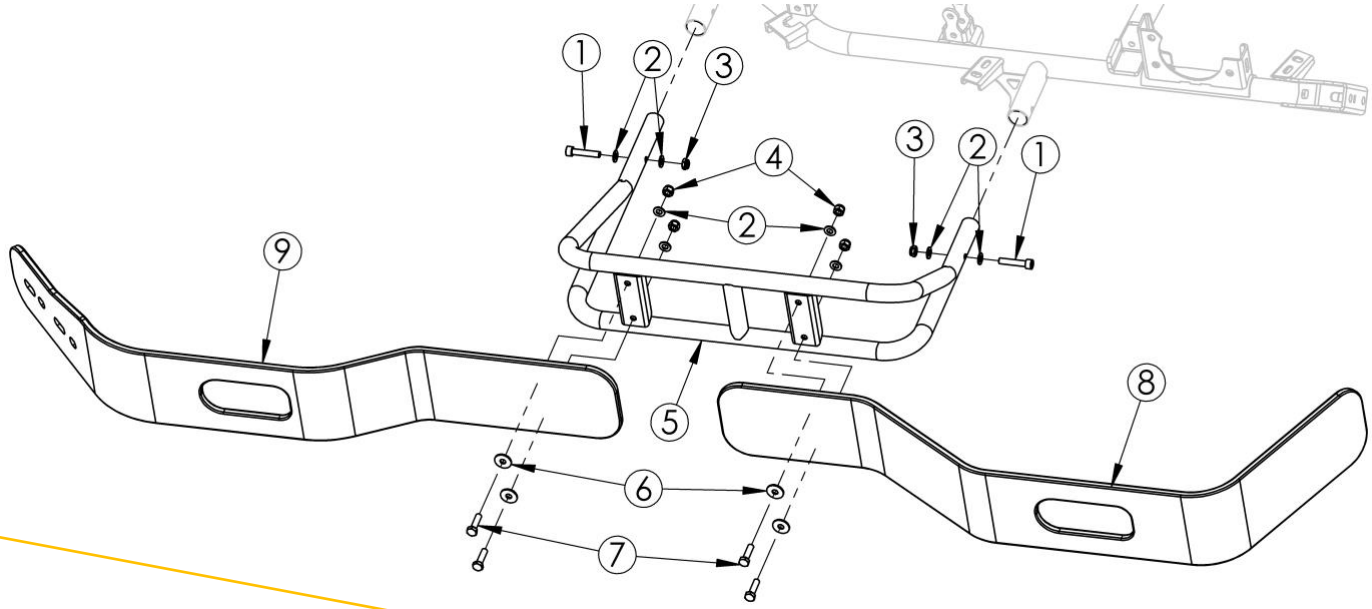

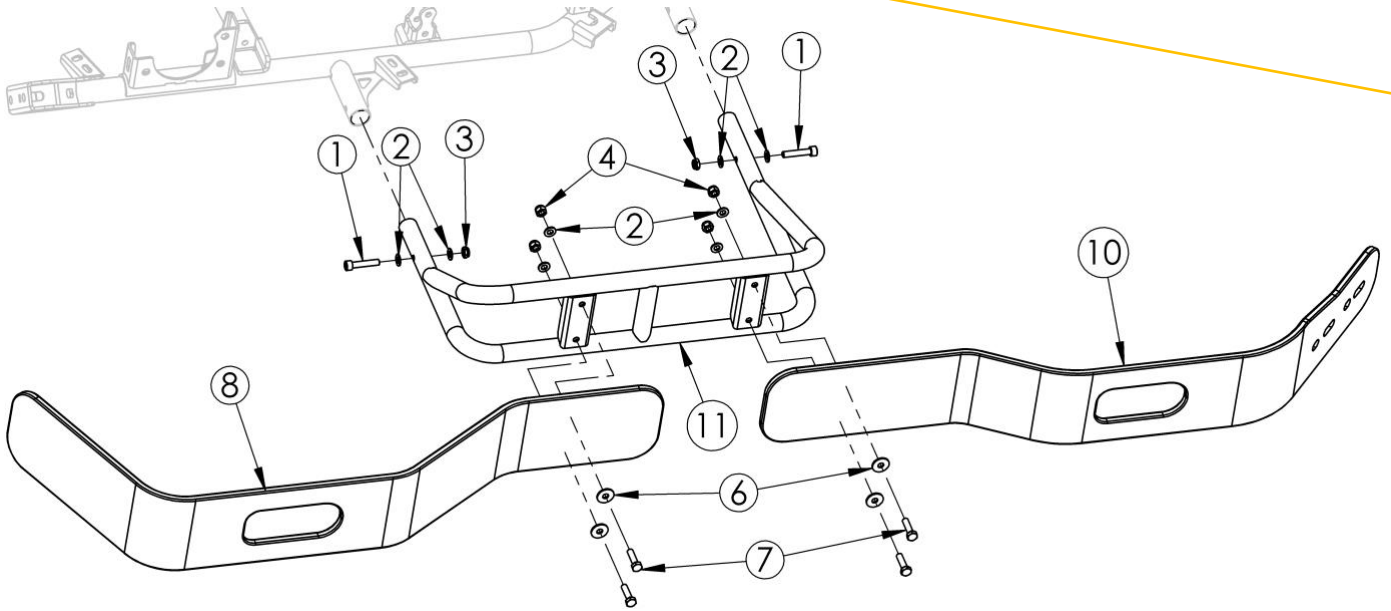

DX – RH

POS.	COD.	DESCRIZIONE	*DESCRIPTION*
1	AFN.00910	VITE M 8X 40 ESAGONALE 5739	*M 8X40 HEXAGONAL HEAD SCREW*
2	AFN.00350	RONDELLA 8,5-16X1,5	*WASHER 8,5-16X1,5*
3	AFN.00160	DADO M 8 AUTOBLOCK BASSO	*NUT M8 LOW SELF-LOCKING*
4	AFN.00128	DADO M 8 AUTOBLOCK ALTO	*NUT M8 HIGH SELF-LOCKING*
5	SC0.7190S	PARAURTI LATERALE RR ROTAX SX	*RR ROTAX LH SIDE BUMPER*
6	AFN.02415	RONDELLA 8,5-24X2	*8,5-24X2 WASHER*
7	AFN.00307	VITE M 8X 30 ESAGONALE 5739	*M 8X30 HEXAGONAL HEAD SCREW*
8	AFS.7054DS	FASCIA PARACOLPI LAT. POST. DX/SX RR ROTAX	*RR ROTAX REAR SIDE BUFFER BAND*
9	AFS.7053S	FASCIA PARACOLPI LAT. ANT. SX RR ROTAX	*RR ROTAX LH FRONT SIDE BUFFER BAND*
10	AFS.7053D	FASCIA PARACOLPI LAT. ANT. DX RR ROTAX	*RR ROTAX RH FRONT SIDE BUFFER BAND*
11	SC0.7190D	PARAURTI LATERALE RR ROTAX DX	*RR ROTAX RH SIDE BUMPER*

PARAURTI E PROTEZIONE POSTERIORI – REAR BUMPER AND REAR BUFFER

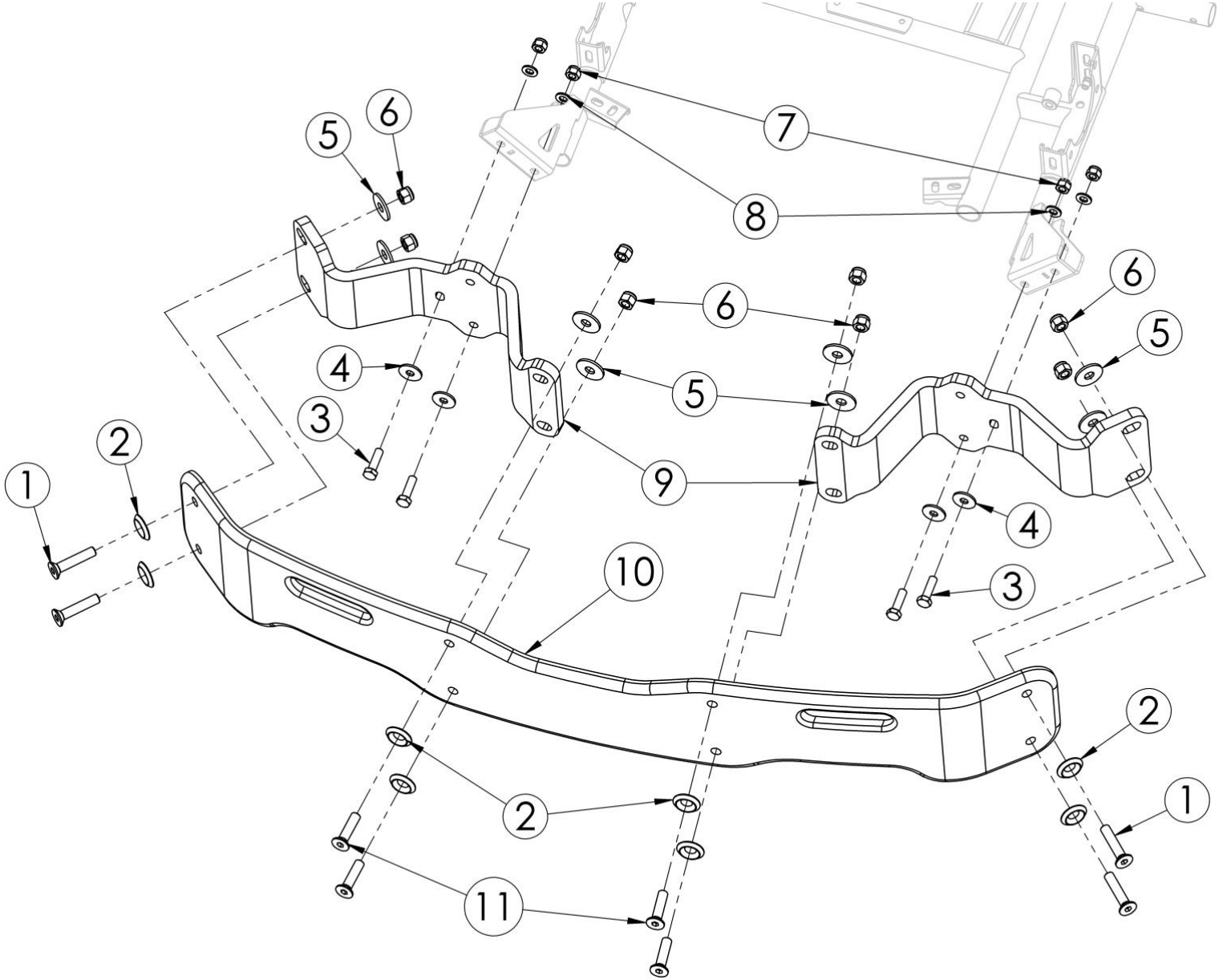

POS.	COD.	DESCRIZIONE	*DESCRIPTION*
1	AFN.00676	VITE M12X 60 SVASATA 5933	M12X60 COUNTERSUNK HEAD SCREW
2	SZ0.02367	RONDELLA 12 SVASATA BULLONE CENT	*CENTURION COUNTERSUNK BOLT M12 WASHER*
3	TES.10X035	VITE M10X 35 ESAGONALE 5739	*M10X35 HEXAGONAL HEAD SCREW*
4	AFN.00125	RONDELLA 10,5-30X2,5	*WASHER 10,5-30X2,5*
5	AFN.02416	RONDELLA 12 -36X3	12-36X3 WASHER
6	AFN.02364	DADO M12 AUTOBLOCK ALTO	*M12 HIGH SELF-LOCKING NUT*
7	AFN.02393	DADO M10 AUTOBLOCK ALTO	*NUT M10 HIGH SELF-LOCKING*
8	AFN.01637	RONDELLA 10,5-20X2	*WASHER 10,5-20X2*
9	AFS.03041	BALESTRA POSTERIORE CENTURIONMINI	*REAR LEAF SPRING CTM*
10	AFS.03040	FASCIA PARACOLPI POSTERIORE CENTMINI	*REAR BUFFER BAND CTM*
11	AFN.02294	VITE M12X 50 SVASATA 5933	*M12X50 COUNTERSUNK HEAD SCREW*

FRONTALINO E SPOILER ANTERIORE – FRONT FAIRING AND FRONT SPOILER

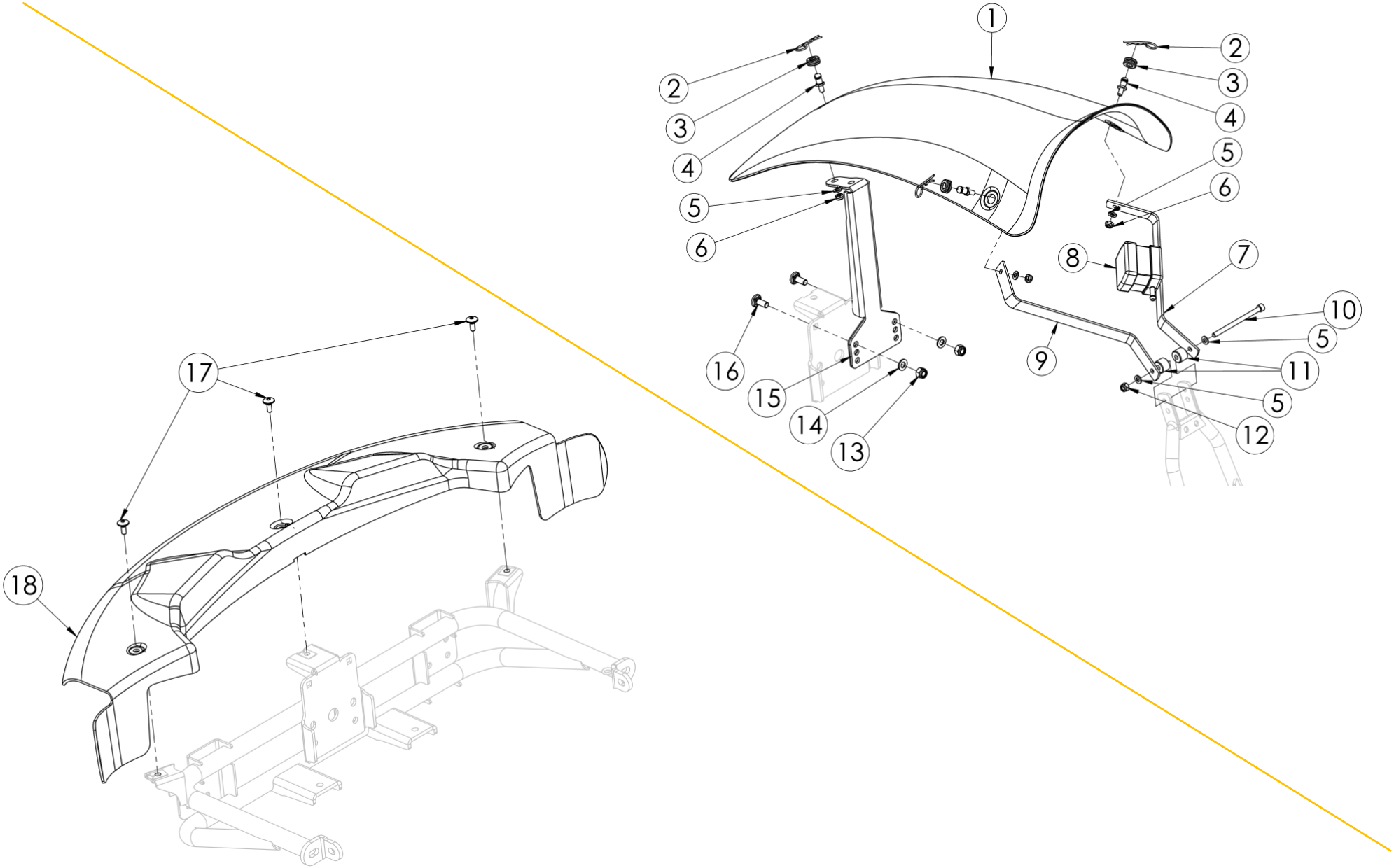

POS.	COD.	DESCRIZIONE	*DESCRIPTION*
1	AFS.05867SOFT	FRONTALINO 507 CHIUSO CIK/FIA SOFT NERO	FRONT FAIRING BLACK 507 SOFT
2	SZ0.00102	SPINA ELASTICA SUPPORTO FRONTALINO	*FRONT FAIRING ELASTIC PIN*
3	AFS.04522	GOMMINO SUPPORTO FRONTALINO KG	*FRONT FAIRING RUBBER KG*
4	SBN.00103	PERNO SUPPORTO FRONTALINO INFERIORE	*FRONT FAIRING SUPPORT PIVOT BLACK*
5	AFN.00105	RONDELLA 6,5-12X1,5	*WASHER 6,5-12X1,5*
6	AFN.00106	DADO M 6 AUTOBLOCK BASSO	*NUT M6 LOW SELF-LOCKING*
7	SC0.5903D	SUPPORTO FRONTALINO CRG SUP. DX 508/MK27	*FRONT FAIRING SUPPORT TOP RH 508/MK27*
8	AFS.00753	TANICA RECUPERO	RECOVERY TANK
9	SC0.5903S	SUPPORTO FRONTALINO CRG SUP. SX 508/MK27	*FRONT FAIRING SUPPORT TOP LF 508/MK27*
10	AFN.00404	VITE M 6X 90 CILINDRICA 5931	*M6X90 SOCKET HEAD SCREW*
11	FAN.00355	SPESSORE 6,5-18X14 FRONTALINO NERO	*SPACER 6,5-18X14 FRONT FAIRING BLACK*
12	AFN.00264	DADO M 6 AUTOBLOCK ALTO	*NUT M6 HIGH SELF-LOCKING*
13	AFN.00128	DADO M 8 AUTOBLOCK ALTO	*NUT M8 HIGH SELF-LOCKING*
14	AFN.00350	RONDELLA 8,5-16X1,5	*WASHER 8,5-16X1,5*
15	SC0.07219	SUPPORTO FRONTALINO RR ROTAX	*RR ROTAX FRONT FAIRING SUPPORT*
16	EX4753	VITE M 8X 20 TESTA TONDA QUADRO SOTTOTESTA DIN 603	*M 8X 20 CARRIAGE SCREW*
17	AFS.00261	VITE TESTA TONDA LARGA M 6X 16 PIANALE	*FLOOR TRAY SCREW LARGE ROUND HEAD M6X16*
18	AFS.04455	SPOILER ANTERIORE HERCULES	*FRONT SPOILER HERCULES*

CARENE LATERALI E PIANALE – SIDE FAIRINGS AND FLOOR TRAY

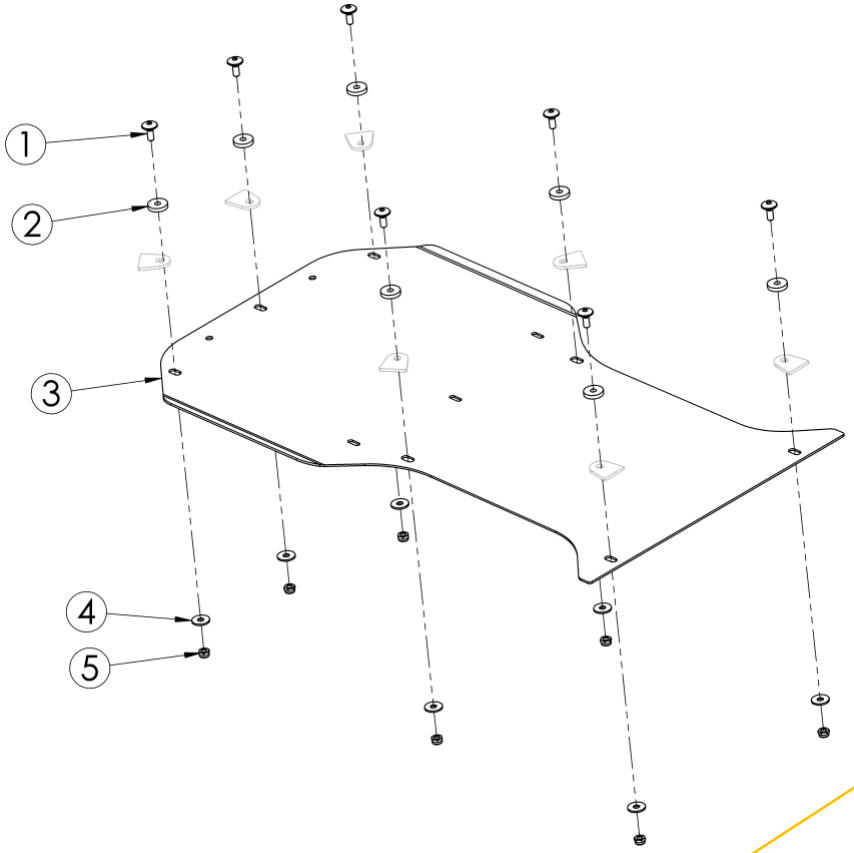

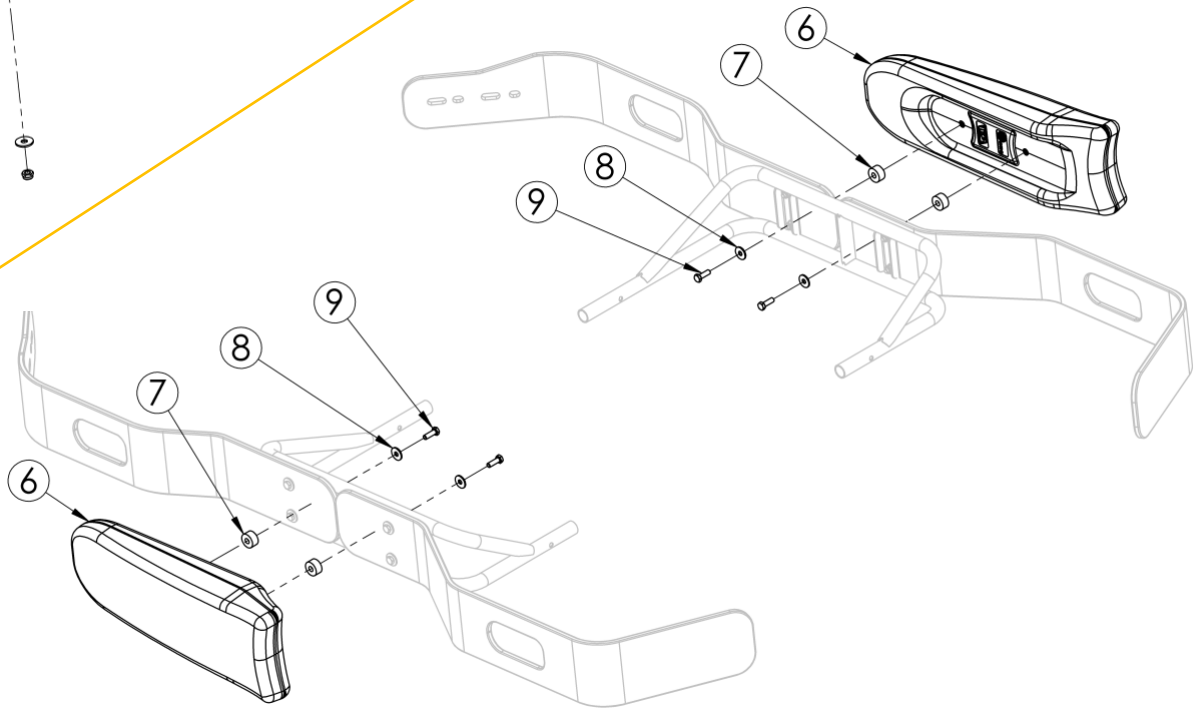

POS.	COD.	DESCRIZIONE	*DESCRIPTION*
1	AFS.00261	VITE TESTA TONDA LARGA M 6X 16 PIANALE	FLOOR TRAY SCREW LARGE ROUND HEAD M6X16
2	AFS.00258	GOMMINO PIANALE	*FLOOR TRAY RUBBER*
3	AML.0057409	PIANALE KT2 PAG.068	*FLOOR TRAY KT2*
4	AFN.00263	RONDELLA 6,5-18X1,6	*WASHER 6,5-18X1,6*
5	AFN.00106	DADO M 6 AUTOBLOCK BASSO	*NUT M6 LOW SELF-LOCKING*
6	AFS.05266	CARENA LATERALE MINI KG MK20 DX/SX NERO	*MINI KG SIDE FAIRING MK20 LEFT/RIGHT*
7	AFS.04662	SPESSORE SEDILE 10-27X14 IN NYLON	*SEAT LINING 10-27X14 NYLON*
8	AFN.02415	RONDELLA 8,5-24X2	*8,5-24X2 WASHER*
9	AFN.00911	VITE M 8X 45 ESAGONALE 5739	M 8X45 HEXAGONAL HEAD SCREW

MOZZI RUOTA E CERCHI – WHEEL HUBS AND RIMS

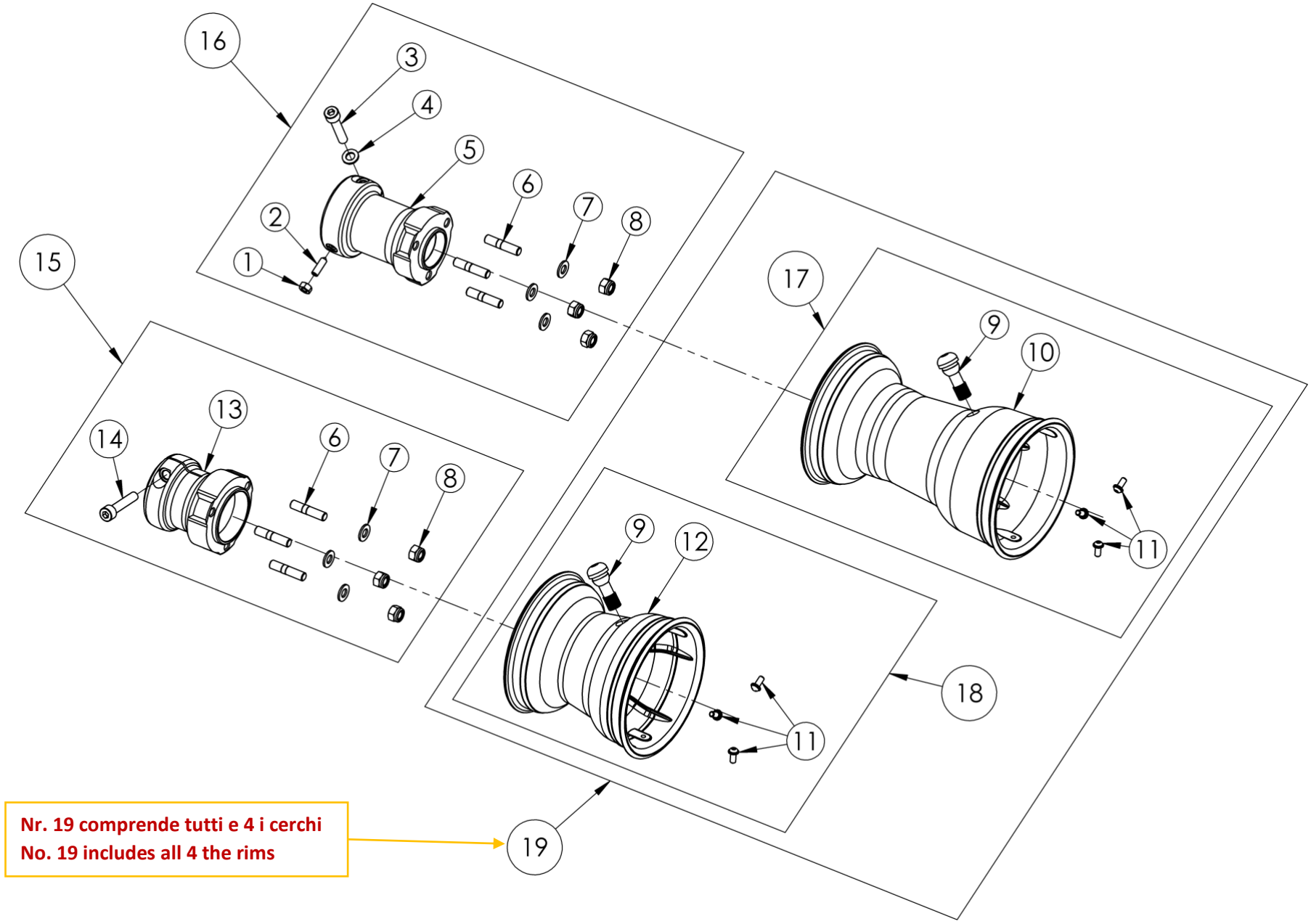

POS.	COD.	DESCRIZIONE	*DESCRIPTION*
1	AFN.00093	DADO M 6	NUT M 6
2	AFN.00357	GRANO M 6X10 (PIANTONE-POMPA V06)	*GRUB SCREW M6X10*
3	AFN.00132	VITE M 8X 40 CILINDRICA 5931	*M8X40 SOCKET HEAD SCREW*
4	AFN.00287	RONDELLA 8,5-14X1,5	*WASHER 8,5-14X1,5*
5	FMG.06194	MOZZO POSTERIORE 40X105 R2.0 AL ORO COMP.	*ALU REAR HUB 40X105 R2.0 GOLD COMPLETE*
6	AFS.00126	PRIGIONIERO M 8	*STUD M8*
7	AFN.00350	RONDELLA 8,5-16X1,5	*WASHER 8,5-16X1,5*
8	AFN.00128	DADO M 8 AUTOBLOCK ALTO	*NUT M8 HIGH SELF-LOCKING*
9	AFS.02649	VALVOLA TUBLESS CORTA	*TUBLESS VALVE SHORT*
10	FFN.05197	CERCHIO MG H212 R2.0 POST CRG	*CRG MG H212 R2.0 REAR RIM*
11	CRG.00173	VITE M 5X 12 CERCHIO COMPLETA (+OR)	*M 5X12 WHEEL SCREW ASSAY + OR*
12	FFN.05196	CERCHIO MG H132 R2.0 ANT CRG	*CRG MG H132 R2.0 FRONT RIM*
13	AFS.05687	MOZZO ANTERIORE KZ 40X 80 R2.0 MG	*MAGNESIUM FRONT HUB KZ 40X80 R2.0*
14	AFN.00132	VITE M 8X 40 CILINDRICA 5931	*M8X40 SOCKET HEAD SCREW*
15	FMG.05666	MOZZO ANTERIORE KZ 40X 80 R2.0 AL ORO COMPLETO	*FRONT HUB KZ 40 X 80 R2.0 ALUMINUM GOLD COMPLETE*
16	FMG.06194	MOZZO POSTERIORE 40X105 R2.0 AL ORO COMP.	*ALU REAR HUB 40X105 R2.0 GOLD COMPLETE*
17	FM0.05197	CERCHIO MG H212 R2.0 POST CRG COMPL. STD	*MG REAR RIM H212 R2.0 CRG COMPLETE STD*
18	FM0.05196	CERCHIO MG H132 R2.0 ANT CRG COMPL. STD	*MG FRONT RIM H132 R2.0 CRG COMPLETE STD*
19	FK0.05426	SET CERCHI MG H132-H212 R2.0 CRG	*MG RIMS SET H132-H212 R2.0 CRG*

OPTIONAL RIDUZIONE SEDILE IN GOMMA – OPTIONAL RUBBER SEAT REDUCTION



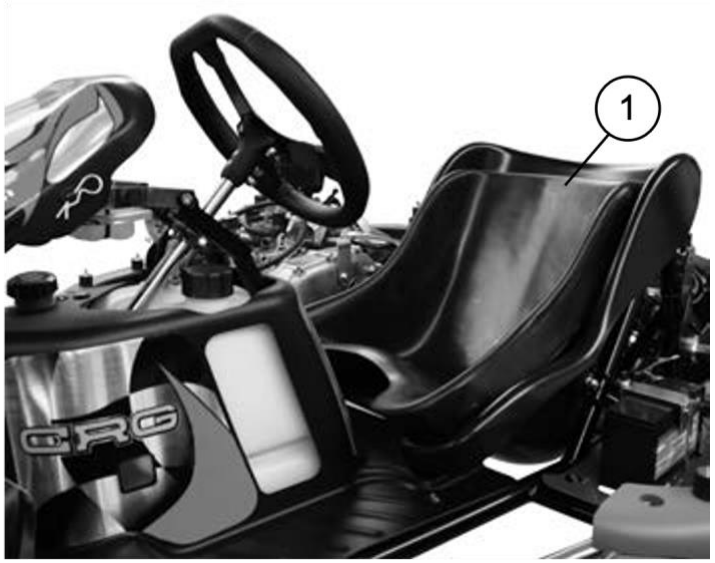

OPTIONAL RIDUZIONE SEDILE IN GOMMA – OPTIONAL RUBBER SEAT REDUCTION

POS.	COD.	DESCRIZIONE	*DESCRIPTION*
1	AFS.00746	RIDUZIONE SEDILE CENTURION	ADJUSTABLE RUBBER SEAT CENT

Road Rebel Rotax

C.R.G. s.r.l. Via Mantova 4F – 25017 – Lonato del Garda (BS) - TEL. +39.030.9912604 FAX +39.030.9130714

www.crgrentalkart.com – rental@kartcrg.com